California Environmental Protection Agency

AIR RESOURCES BOARD

AIR QUALITY SURVEILLANCE BRANCH

draft

STANDARD OPERATING PROCEDURES

FOR

ENVIRONICS MODEL 9100 GAS CALIBRATION SYSTEM

AQSB SOP 700

First Edition

MONITORING AND LABORATORY DIVISION

March 2012

California Environmental Protection Agency
AIR RESOURCES BOARD

draft

Approval of Standard Operating Procedures (SOP)

Title: ENVIRONICS MODEL 9100 GAS CALIBRATION SYSTEM

SOP: AQSB SOP 700, First Edition

Section: Operation Support Section

Branch: Air Quality Surveillance Branch (AQSB)

Division: Monitoring and Laboratory Division (MLD)

Prepared by: Operation Support Section

Approval: This SOP has been reviewed and approved by:

_____ _____
Reginald L. Smith, Manager Date
Operation Support Section
Air Quality Surveillance Branch

_____ _____
Kenneth R. Stroud, Chief Date
Air Quality Surveillance Branch

TABLE OF CONTENTS

Environics 9100 Gas Calibration System

		Page(s)	Date
1.0	**GENERAL INFORMATION**	6-7	03/12
1.1	Introduction		
1.2	Description of Environics 9100		
1.3	Safety Precautions		
1.4	Interferences/Limitations		
2.0	**INSTALLATION PROCEDURES**	8-15	03/12
2.1	Physical Inspection		
2.2	Environics 9100 Configuration		
2.3	Set Date and Time		
2.4	Programming Maintain Ports Settings		
2.5	Programming Daily Precision and Span Sequences		
2.6	Programming Output Status Commands		
2.7	Programming Timer Control Setting		
2.8	Data Logger Configuration		
2.9	Zero Air Connection		
2.10	Manifold Connection		
2.11	Calibration Gas Connection		
3.0	**QUALITY CONTROL PRACTICES**	16-17	03/12
3.1	Normal Nightly Operation		
3.2	Operation Outside of Normal Limits		
3.3	Data Actions		
4.0	**ROUTINE SERVICE CHECKS**	18-19	03/12
4.1	General Information		
4.2	Daily Checks		
4.3	Weekly Checks		
4.4	Monthly Checks		
4.5	Semiannual Checks		
4.6	Annual Checks		

draft

TABLE OF CONTENTS (Cont.)

Environics 9100 Gas Calibration System

		Page(s)	Date
5.0	**MAINTENANCE AND PROCEDURES**	20	03//12
5.1	General Information		
6.0	**CALIBRATION**	21-30	03/12
6.1	General Information		
6.2	Apparatus		
6.3	Leak Check		
6.4	Air MFC Calibration		
6.5	Final Air MFC Calibration		
6.6	Gas MFC Calibration		
6.7	Final Gas MFC Calibration		
6.8	Ozone Generator Calibration		
6.9	Final Ozone Generator Calibration		
6.10	Post Calibration Procedures		
6.11	Calculating Expected Precision and Span Concentrations		
7.0	**TROUBLESHOOTING**	31-32	03/12
7.1	Troubleshooting Guide for Nightly Calibrations		

draft

TABLE OF CONTENTS (Cont.)

Environics 9100 Gas Calibration System

TABLES

Table 1: Maintain Ports Settings
Table 2: Span Sequence Settings
Table 3: Precision Sequence Settings
Table 4: Status Output Assignment Editor
Table 5: Status Input Assignment Editor
Table 6: Timer Control Weekly Program
Table 7: Routine Maintenance Schedule

FIGURES

Figure 1: Rear of 9100 Gas Calibrator

APPENDIX

AQSB QC Form 700

draft

draft

1.0 GENERAL INFORMATION

1.1 Introduction:

This Standard Operating Procedure (SOP) describes the procedures used to operate the Environics Model 9100 Gas Calibration System for calibration of California Air Resource Board's Air Quality Surveillance Branch's (AQSB) ambient air monitoring stations. This procedure is designed to supplement the Environics Model 9100 Operator's Manual by describing modifications in hardware or operating procedures which may have been implemented by the AQSB. The intent of this document is not to duplicate the operator's manual, and where applicable, this SOP refers to the Environics model 9100 Operator's Manual.

Prior to operating or working with Environics model 9100 units, AQSB field staff should read the operator's manual.

1.2 Description of Environics 9100:

The Environics Model 9100 Gas Calibration System, hence referred to as the 9100, is a single unit module, with an advanced microprocessor, which manages the operation of mass flow controllers (MFC's) and an ozone generator module.

The 9100's, as used by the AQSB, are typically equipped with one air dilution mass flow controller and one or two gas dilution mass flow controllers. The air mass flow controller typically has a range of 0 – 20 standard liters per minute (SLPM) and the gas mass flow controller has a range of 0 – 100 standard cubic centimeters per minute (sccm). When combined with a zero air source and a certified gas cylinder, the 9100 is capable of providing various gas concentrations. The mass flow controllers are referenced to 760 millimeters mercury (mm Hg) and 25 degrees centigrade. Standard temperature and pressure corrections are automatically performed by the calibrator to maintain accurate flows in any operating environment.

The 9100 is also equipped with an ozone generator. The ozone generator uses an ultra-violet (UV) lamp that is accurately controlled by an optical feed back system that maintains constant lamp intensity at computer commanded levels. Pressure, temperature and flowrate in the ozone generator are also controlled and sensed by the microprocessor resulting in stable, precise and repeatable concentrations of ozone at various levels upon command.

1.3 Safety Precautions:

OPERATING THE 9100 AT AN INCORRECT LINE VOLTAGE WILL DAMAGE THE INSTRUMENT. CHECK THE LINE VOLTAGE BEFORE PLUGGING THE INSTRUMENT INTO ANY POWER SOURCE.

Before connecting or disconnecting any cables, wiring harnesses or other sources of potential electrical impulse, be sure the unit is powered off.

Always use static discharge equipment when handling circuit boards.

The ultraviolet (UV) lamp utilizes high voltage, use normal voltage precautions when working on this calibration system. **Wear UV safety glasses if working with the UV lamp.**

The superblend gas mixture contains high concentration of poisonous gases. Use the proper precautions when working with high pressure compressed gases.

1.4 Interferences/Limitations:

Moisture or particles from the zero air supply can potentially affect the ozone generator accuracy. To ensure accurate and repeatable ozone concentrations operators must verify that the dew point of the zero air source be less than minus 16 degrees C.

Do not pressurize the dilution air or gas input ports more than 50 psi.

draft

2.0 INSTALLATION PROCEDURES

2.1 Physical Inspection:

Unpack the instrument and verify that all required parts have been received in good condition. Open the instrument cabinet to determine if there are any loose PC boards, tubing, filters, and/or electrical connections. Mount the instrument in the station instrument rack. Connect electrical power to the instrument and allow the 9100 to warm up for approximately 30 minutes.

2.2 Environics 9100 Configuration:

The normal operation of the 9100 in AQSB ambient air monitoring operations will be to control the automatic nightly calibrations for the ambient gaseous instruments. The typical AQSB calibration sequence is performed with the 9100 operating in the flow mode using 10.0 SLPM of zero/dilution air and either 22 or 82 SCCM of high concentration gas. Ozone nightly auto calibrations are conducted using either 0.07 ppm (**70 ppb**) for precision checks or 0.320 ppm (**320 ppb**) for span checks via the ozone generator. Calibration gases are delivered to the instruments either through the station manifold or through the station probe line from the probe inlet. To allow the 9100 to perform automatic nightly calibrations, the following parameters must be configured in the 9100:

- Set Date and Time
- Maintain Ports Configuration
- Daily Precision and Span Sequence
- Output Status for Datalogger
- Timer Control

The Operation Support Section's Instrument Laboratory typically sets these parameters, **however it is recommended that these values be confirmed by field staff prior using the 9100 for station operations.**

2.3 Set Date and Time:

All AQSB air monitoring stations operate on **Pacific Standard Time (PST)** during the entire year. Therefore when setting the time and date on the 9100 set the time to current PST time. Refer to the 9100 operator's manual section 5.12 "DATE/TIME" for details on setting the time and date.

draft

2.4 Programming the Maintain Ports Setting:

To properly calculate output concentrations, the gas concentration of the station's gas or superblend cylinders must be programmed into the 9100. To enter gas cylinder information, select **<MAINTAIN PORTS>** from the main menu. Enter the station cylinder gas concentrations and cylinder identification number into the 9100. The maintain ports screen should resemble Table 1.

MAINTAIN PORTS (Table 1)

Cylinder Gas Concentration	Gas ID
BALANCE	
50.0 PPM	NO
500.0 PPM	CO
13.0 PPM	SO2
2160.0 PPM	CH4

If Nitric Oxide is in the mix, NO MUST be used for the Gas ID.

Cylinder Identification: CC123456

Port >2

PPM or % CYL ID PRT SCRN EXIT

Note: Gas conc. value will differ depending on the balance of superblend cylinder in use.

draft

2.5 Programming the Daily Precision and Span Sequences:

Daily precision and span sequences should be programmed containing information in the sequence control tables (see below). To enter this information select, **<PROGRAM MODE>** from the main menu then select **<SEQUENCE>**. Next press **<RECALL>.** The 9100 display should resemble this:

Setup RECALL from Register

Register	Name
01	Span
02	Precision
03	
04	

Recall SETUP in register 01

Use the number pad to enter the desired register number and verify that the proper span and precision sequence control values are entered.

SPAN SEQUENCE SETTINGS (Table 2)

Sequence Control

Item	Run Time	Mode	Port	Air	Gas	Air Total	Ozone	Gas ID	Conc.
1	18	Flow	2	10.0	0.0	10.0	0.0	NO	0.0
2	18	Flow	2	10.0	82.0	10.082	0.0	NO	0.407
3	18	Flow	2	10.0	82.0	10.082	0.32	NO	0.407
4	18	Flow	2	10.0	0.0	10.0	0.32	NO	0.0
5	5	Flow	2	0.0	0.0	0.0	0.0	NO	0.0

Note: Gas conc. value will differ depending on the concentration of calibration gas cylinder in use. The value of NO must be at least 10% but as much as 50% higher than the O3 concentration to ensure proper GPT during step 3. Item 5 should only be programmed into 9100 sites operating the CARBLogger system, this step allows for an instrument recovery phase after the auto calibration sequence.

draft

PRECISION SEQUENCE SETTINGS (Table 3)

Sequence Control

Item	Run Time	Mode	Port	Air	Gas	Air Total	Ozone	Gas ID	Conc.
1	18	Flow	2	10.0	0.0	10.0	0.0	NO	0.0
2	18	Flow	2	10.0	22.0	10.022	0.0	NO	0.110
3	18	Flow	2	10.0	22.0	10.022	0.07	NO	0.110
4	18	Flow	2	10.0	0.0	10.0	0.07	NO	0.0
5	5	Flow	2	0.0	0.0	0.0	0.0	NO	0.0

Note: Gas conc. value will differ depending on the concentration of calibration gas cylinder in use. The value of NO must be at least 10% but as much as 50% higher than the O3 concentration to ensure proper GPT during step 3. Item 5 should only be programmed into 9100 sites operating the CARBLogger system, this step allows for an instrument recovery phase after the auto calibration sequence.

2.6 Programming the Output/Input Status Channels:

The status output commands should be programmed containing information in the following table. To enter this information, from the main menu press **<SETUP>,** then press **<OUTPUT>.** The 9100 display should show the status output assignment editor screen. Verify that the status output screen matches the following table. Make adjustments if necessary.

STATUS OUTPUT ASSIGNMENT EDITOR (Table 4)

CONDITIONS/ STATUS	1	2	3	4	5	6	7
1 Just	M1	P1					
2 Just	M1	M2	P1	P2			
3 Just	M1	M2	P1	P2	OZ		
4 Just	M1	P1	OZ				
5 Any	S01						
6 Any	S01						
7 Any	M1						
8 Any	M1						

The eight (8) status output lines allow the 9100 to send a contact closure signal or 24 V control when the conditions listed in Table 4 are met. Outputs 1 – 4 are wired to the digital inputs of the ESC data logger. This allows the datalogger to determine what steps of the calibration are taking place. For example when Status 3 is met (MFC's 1 & 2 are energized, Ports 1 & 2 are open and the 9100's ozone generator is active) the 9100 is in the gas titration phase of the calibration sequence and is flagged accordingly by the datalogger. Output 5 is wired to the solenoid valve assembly on the output of the 9100. This allows for calibration gases to be delivered to the station manifold or to the top of the sample line "through the probe". If SO1 (Sequence 1, Span) is initiated the solenoid valve is activated and calibration gases will be delivered "through the probe" inlet. Status output 6 is used to trigger ESC 8816/32 data loggers between precision and span calibrations. Status outputs 7 – 8 are normally not used in typical AQSB operations.

The status input commands should be programmed containing information in the following table. To enter this information, from the main menu press **<SETUP>,** then press **<INPUT>.** The 9100 display should show the status input assignment editor screen. Verify that the status input screen matches the following table. Make adjustments if necessary.

STATUS INPUT ASSIGNMENT EDITOR (Table 5)

	TYPE	SETUP#
Status in #1 =	STOP	
Status in #2 =	IGNORE	
Status in #3 =	IGNORE	
Status in #4 =	IGNORE	
Status in #5 =	IRGORE	
Status in #6 =	IGNORE	
Status in #7 =	IGNORE	
Status in #8 =	IGNORE	
Idle timer =	TIMER CTL 01	

Time for the idle timer = 04 (0 to 24 hours, 0 = OFF)

The Idle timer status line commands the 9100 to perform a certain function after a specified period of time. The AQSB standard is the command **TIMER CTL 01.** This command will force the 9100 to run the program located in register one (1) of the timer control set-up screen (refer to section 2.7 of this document) if the 9100 is idle for more than 4 hours.

draft

2.7 Programming the Timer Control Setting:

After the time/date, program sequences output/input status and maintain ports have been configured; the 9100 should be set up to operate in timer control mode. Refer to Environics operator's manual section 5.6.2 (Timer Control). The timer control mode allows the 9100 to start automatically and run a program listed in the timer control recall register. To review the present weekly program or to enter a new program, select **<PROGRAM MODE>** from the main menu. Then select **<TIMER CONTROL>.** Next press **<RECALL>.** The Timer Control Set-up screen should resemble this.

Setup RECALL from Register

Register	Name
01	Weekly
02	

Recall SETUP in register 01

To verify or set the Weekly program press **<RECALL>**. The weekly program should match the following table.

Weekly Program (Table 6)

	Sunday	Monday	Tuesday	Wednesday	Thursday	Friday	Saturday
Sequence	2 PRECI	2 PRECI	2 PRECI	2 PRECI	2 PRECI	1 SPAN	1SPAN
Start	03:50	03:50	03:50	03:50	03:50	03:50	03:50
Duration	01:12	01:12	01:12	01:12	01:12	01:12	01:12
Stop	05:02	05:02	05:02	05:02	05:02	05:02	05:02

After the weekly program has been verified or set, press **<ACCEPT>**. To start the calibrator press **<START>.** If successful the 9100 will indicate the start of the next calibration sequence.

draft

2.8 Data Logger Connection:

Data loggers currently used by the AQSB consist of the Environmental Systems Corporation (ESC) models 8800, 8816 and 8832. To allow for the collection of digital minute based and instrument diagnostic data, the AQSB has developed a PC based data logger for use in ARB ambient air monitoring stations. The AQSB has named this system the California Air Resources Board Data Logger (CARBLogger).

The ESC data logger will scan the analog output signals of the station analyzers and record the corresponding values. Prior to connecting the 9100 to the ESC data logger, operators should refer to the ESC data loggers operating manual for specific data logger used in the air monitoring station. When the 9100 is performing a calibration, the data logger must be configured to allow data collected during calibration to be flagged as “cal” data. For ESC 8800 data loggers, the 9100 controls the calibration. Connect an interface cable from the 9100 “STATUS OUTPUT” to the 8800 data logger. This interface cable also allows the 8800 data logger to determine what steps of the calibration are taking place. For ESC 8816/8832 data loggers, the logger reports calibration values to AQDASII. Refer to the 8816/8832 instrument manual or 8816/8832 SOP for proper configuration.

CARBLogger utilizes open source software applications to create a digital based data acquisition and logging system. CARBLogger can interact with air monitoring instruments to collect, repackage, process, and submit data in whatever format required. The logger can examine diagnostic data and alert staff via emails when parameters are out of specification. For configuration of CARBLogger with the 9100 contact Operations Support Section staff.

2.9 Zero Air Connection:

The standard zero air generator used by the AQSB is the API model 701H. Connect the output of the zero air generator to Port 1 of the 9100 with ¼ O.D. FEP Teflon tubing. It is recommended, but not required, that the air inlet of the 9100 has a 7μm nupro filter installed. The output of the zero air source must be set to 35 psig measured at the inlet of the 9100. The API 701 is a “demand” system and when connected to the 9100, will deliver zero air upon actuation of MFC 1.

Note: For proper operation of the 9100, zero air must be extremely dry (Dew point less that –16 °C).

2.10 Manifold Connection:

The output of the 9100 can be delivered to the instruments either via the manifold or the probe line (refer to section 3.1 of this document). To enable the 9100 to deliver calibration gases to either the manifold or probe line, the 9100 output is connected to a dual valve solenoid. The normally open (NO) output line should be plumbed to the manifold and the normally closed (NC) line should be connected to the station inlet “candy cane” calibration port. During precision calibrations the solenoid is normally open allowing calibration gases to go to the manifold. During span calibrations the solenoid is activated and calibration gases are allowed to pass through the normally closed solenoid and are delivered to the rooftop inlet.

2.11 Calibration Gas Connection:

The 9100 is capable of blending various types of gases from compressed gas cylinders. Connect the output of the gas cylinder to Port 2 of the 9100 with cleaned, 1/8 inch OD, stainless steel tubing. Superblend gas cylinders should use a double stage, stainless steel regulator with a CGA 660 connector. The regulator output pressure should be set to **25** psi. All connections should be made with Parker-Hannifin Swagelock or equivalent stainless steel compression fittings.

Figure 1: Rear of 9100 Gas Calibrator

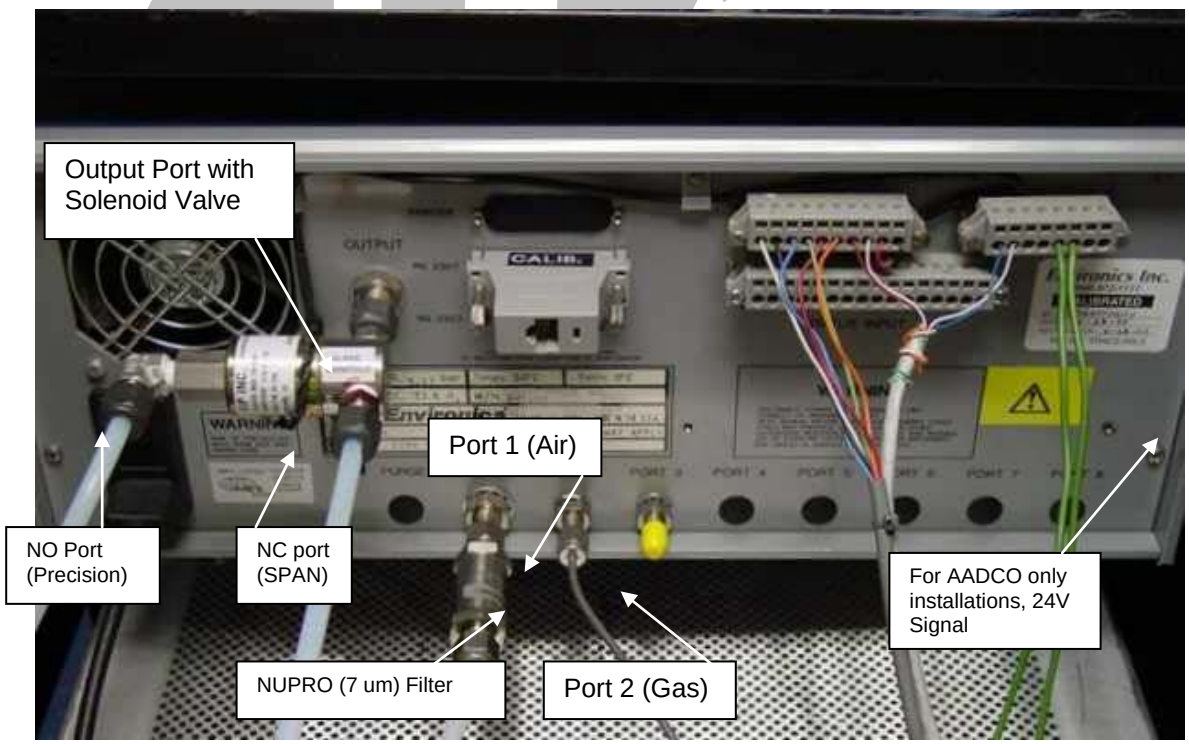

3.0 QUALITY CONTROL PRACTICES

Under normal conditions, the 9100 produces an automatic Quality Control (QC) calibration check of gaseous instruments which is compared to an expected true value. The 9100 auto calibration serves as a drift check and is not an instrument calibration.

Adjustments should not be made to station analyzers based on results of the night quality control checks!

3.1 Normal Nightly Operation:

During normal operation, the 9100 operates in the automatic timer mode seven days a week.

A typical nightly calibration consists of four (4) 18-minute steps beginning at 0350. During the first step all instruments are provided with zero air. During the second step, port 2 is opened and the 9100 is commanded to deliver a known gas concentration. During the third step, the 9100 generates a known ozone concentration to be titrated with the gas concentration to produce NO2. During the last step, port 2 is closed and only ozone is delivered to the manifold or probe line.

On two days of the week, Friday and Saturday, the 9100 delivers a zero and span level of calibration gases “through the probe” inlet, thereby checking the complete probe and sampling checking the span level accuracy of each instrument.

On the remaining five days, Sunday through Thursday, the 9100 produces a precision level of calibration gases. The precision checks serve at the 1-point QC check required by the Title 40CFR.

If the nightly span and precision calibration levels are within control limits during the daily timer controlled operation of the 9100, it may be assumed that all sampling instruments and the calibration system (calibrator, air supply and gas cylinders) are operating properly.

3.2 Operation Outside of Normal Limits:

If the nightly zero, span and precision nightly Quality Control Checks of any instrument are outside of the normal control limits, refer to section 7.0 Troubleshooting of this document. If it is determined or suspected that the problem is related to a particular analyzer, correct that instrument. If the problem is determined or suspected to be with the calibration system, contact the

draft

appropriate calibration personnel.

NOTE: Do not make any adjustments to the 9100 based on results of the nightly automatic calibrations, doing so will invalidate the calibration of the instrument.

3.3 Data Actions:

AQSB has established the following Quality Control (QC) **warning**, **action**, **correction** and **deletion** control limits based on the results of nightly automatic QC checks.

AQSB QC Control limits are evaluated for precision and span QC drift checks. Zero QC control limit criteria are based on actual difference, not % difference from true. Acceptable zero QC limits are ± 5 ppb for all gaseous instruments except CO. Zero QC limits for CO are ± .04 ppm (40 ppb).

It can be assumed that instruments are operating properly and no corrective action is required if precision and span instrument QC checks are less +/- 5% from true and zero instrument QC checks are less than 5 ppb (O3, NO2, SO2) or less than 0.04 ppm (40 ppb) CO.

The "**warning level**" is reached when the nightly QC check response of any gaseous analyzer varies by more than +/- 5% from the expected value. At this level, instrument performance should be closely observed and/or corrective action taken before the analyzer reaches the action Level.

The "**action level**" is reached when the precision/span nightly QC check response for Ozone varies more than +/- 7%, other gaseous parameters vary more than +/- 10% or zero QC limits are exceeded. If the action level is reached, corrective action **MUST** be initiated. At the action level, calibration staff using certified transfer standards must verify that instrument drift is due to instrument malfunction and not caused by a problem with the calibration system (i.e. fault O3 generator or zero air supply). If it is determined that instrument drift problems are analyzer specific, corrective actions must be taken to bring the instrument within acceptable control limits. All corrective actions must be documented on the instrument maintenance sheets and recorded in the station log.

Data may be **corrected** if ambient air monitoring data collected where instrument drift, as verified by calibration staff, has been greater than +/- 7% for Ozone and +/- 10% for other gases but less than +/-15% from true. Ambient air monitoring data must be **invalidated** if it is determined and verified that instrument drift has been greater than +/- 15% from true.

4.0 ROUTINE SERVICE CHECKS

4.1 General Information:

Routine service checks should be performed at the intervals listed in Table 7. Service checks may be performed more frequently but should be performed at least at the prescribed intervals. Perform non-routine maintenance as required to assure accurate and complete data recovery. The AQSB QC Form 700 (Appendix A) should be completed weekly and forwarded monthly with the stripcharts and other maintenance records when data is submitted for review.

4.2 Daily (or Each Visit) Checks:

1. Verify 9100 power is on.
2. Check instrument display. Verify that the 9100 is in the TIMER CONTROL mode.
3. Ensure that the correct time and date are displayed on the unit.
4. Review strip charts for auto QC checks performed. Ensure that all instruments responses fall within appropriate control limits.

4.3 Weekly Checks:

1. Observe and record the zero and precision/span values for all of the appropriate pollutants.

4.4 Monthly Checks:

1. Check and record calibration gas cylinder output pressure, cylinder pressure and certification expiration dates.
2. Check and record 9100 calibration date.
3. Verify that the cooling fan is operating.
4. Inspect tubing and power cord for loose connections, kinks, cracks or other defects. Repair and/or replace as necessary.

4.5 Semiannual Checks:

1. Perform field calibration of Environics 9100.

4.6 Annual Checks:

1. Change 7 um Nupro filter on the located at Port 1.

draft

	Value	*Daily	Weekly	Monthly	Semi-Annual	Annual
Power On	On	X				
Timer Control	Set	X				
Time/Date	PST	X				
Observe Zero & Prec./Span	Record		X			
Superblend Output Pres.	25 PSI			X		
Superblend Tank Pres.	> 300 PSI			X		
Observe Fan Operating	Clean			X		
Check tubing and fittings	Clean			X		
Perform Field Calibration	6 Months				X	
Change 7 um nupro filter	1 Year					X

*Daily or each site visit

TABLE 7: Environics 9100 Routine Service Checks

draft

5.0 MAINTENANCE PROCEDURES

5.1 General Information:

The Environics 9100 Gas Calibration System required little if any maintenance. In general, operators should use standard station practices when operating the unit. Refer to Environics operating manual Appendix C “Service and Maintenance” for detailed maintenance issues.

If any maintenance issues arise, please contact the appropriate calibration personnel.

draft

6.0 CALIBRATION PROCEDURES

6.1 General Information:

The Environics 9100 mass flow controllers (MFC's) and ozone generator shall be calibrated upon initial field deployment and then on a semi-annual basis. The instrument must also be re-calibrated after major repairs or after significant instrument drift. The 9100 MFC's are calibrated by flow comparisons with a National Institute of Standards and Technology (NIST) traceable flow transfer standard certified by the MLD's Standards Laboratory. The ozone generator is calibrated by comparing the 9100's ozone output to that of a NIST traceable ozone transfer standard.

Calibration results should be document on AQSB Calibration Form 700.

Prior to calibration of the MFC's, the 9100 must be set to the "single slope and intercept" option. The single slope and intercept method derives a "best fit" linear equation from the MFC calibration data, and uses this single equation for calculating the correct MFC command voltage to achieve the desired flow rate. To set the single slope and intercept mode, go to the system **READY** screen, and press the 8 key, followed by the system password. The current flow calibration method is displayed in the **CALIBRATE MODE** screen.

Prior to starting calibration procedure, disable the station data logger or disconnect the digital in connection at the rear of the data logger.

6.2 Apparatus:

Certified ozone transfer standard

Pure air source

Certified mass flow meters

NIST traceable pressure and temperature standard

Pressure gauge (0-50 psi)

Teflon tubing, fittings and connectors

Laptop computer

draft

6.3 Leak Check:

The 9100's leak test procedures are described in Section 5.14 in the Environics operator's manual.

1. Disconnect the 9100 input connection from the rear of the 9100 and install a pressure gauge between the input of the 9100 and output of the zero air source.

2. The 9100 operator's manual states that a leak check should be performed using diluent (zero) air at 10 pounds per square inch gauge (psig). Therefore the output of the zero air source must be reduced from 35 psig to 10 psig. To decrease air pressure from the zero air source, exit from the **TIMER CONTROL** mode to the main menu. From the main menu, press **< FLOW MODE>**. Command airflow of 10 LPM for MFC 1. Press **<START>**. The zero air system will energize. After the zero air system has stabilized, note the pressure of the gauge on the zero air system and on the pressure gauge at the rear of the 9100. They should be approximately 35 psig. Decrease the air pressure of the zero air system to 10 psig. Press **<STOP>** then **<EXIT>** to return to the main menu.

3. To perform the leak test, press **<MORE>** from the main menu to display the second page of the main menu. The Leak Test option is on the second page of the Main Menu. Press **<LEAK TEST>** and select **<START>**. The system will automatically perform the leak test. A leak rate of less than 5 sccm is acceptable. Record the result on the laptop calibration sheet. If the leak test is greater than 5 sccm, troubleshoot the unit following the operating manual.

   After the leak test, reset the output pressure of the zero air system to 35 psig, or the original pressure set point.

6.4 Air MFC Calibration:

As Is Air Flow Calibration

1. Plug in the flow transfer standard and turn on the power switch. Flow transfer standard should warm up for at least one hour.

2. Verify the data logger has been disabled or marked down.

3. Disconnect the 9100 output connection (complete solenoid assembly, if installed) from the rear of the 9100. Disconnect the 9100 from the station manifold and cap the station manifold. Connect a ¼ inch OD Teflon line

draft

from the 9100 output to an appropriately ranged certified flow transfer standard.

4. Complete the pertinent data on the calibration spreadsheet labeled AS-IS MFC (Port 1).

5. Perform an "As Is" calibration as described below. Sections 5.7.1 and 5.7.2 in the Environics 9100 Operating Manual describes flow calibration procedures for the 9100.

6. To begin the air MFC calibration, place the 9100 in **FLOW MODE**. Set MFC 2 (gas) "Target" to 0.00 SCCM, and set the Ozone "Target" to 0.00 ppm.

7. The air MFC is normally calibrated at 5 flow points, typically 90%, 75%, 50%, 25% and 10% of MFC full-scale range. For a 0 – 20 LPM MFC the calibration flow points should be approximately 18, 15, 10, 5 and 2 LPM's.

8. Set the MFC (air) "Target" to 18 SLPM. With the cursor at the 18 SLPM cell, Press **<START>**. The station pure air generator should start as the source of air for the flow calibration. Verify that the pure air generator output is set to 35 psig.

9. After the flow has stabilized, record the 9100's "Actual Flow" reading, the transfer standard display reading, and calculate the true flow from the transfer standard's certification equation on the calibration data sheet.

10. Enter the "Target Flow" of 15 SLPM and Press **<UPDATE>**. Wait until flow stabilizes (approximately 2 minutes) and record flows. Repeat this procedure for "Target Flows" of 10, 5, and 2 SLPM. After all of the flow data has been documented, Press **<STOP>**.

    If difference between the 9100 flow display and the calculated true flow is greater than ± 0.5 SLPM at any of the calibration points, then a "Final" calibration is necessary.

6.5 Final Air MFC Calibration:

1. To perform a final calibration, the true flow readings for each set point must be entered into the 9100.

2. From the Main Menu Press **CALIBRATE MODE**.

3. Enter the password xxxx. (If displayed)

4. The display should read:

   The system is using a single slope and intercept for computing flows.
   O3 adjusted – pressure gauge is on
   Stop Flow when low flow is detected on

   Press **<FLOW REVISE>**.

5. At MFC 01, Press **<ACCEPT>**. At Port 1 Press **<ACCEPT>**.

6. Enter the flow readings from the "AS-IS" calibration into the "Command Column" of the MFC flow calibration table.

7. Enter the flow values generated by the certified flow transfer standard in the "True Flow" column for the corresponding 18, 15, 10, 5 and 2 SLPM "Command Flows.

8. Record the previous slope and intercept before recalculating a new slope and intercept. Press **<CALC>**, and Press **<YES>** to question: Do you want a new slope and intercept? Press **<SAVE CALC DATA>**. Press **<YES>** to the question: "Do you really want to?"

9. Record the new slope and intercept generated by this calibration.

10. To exit revise flow calibration and return to the Main Menu, Press **<STOP>**.

11. Re-calibrate the Air MFC using steps in section 6.4 of this SOP.

6.6 <u>Gas MFC Calibration</u>:

1. Using the same configuration as in the Air flow calibration, move the 9100 ¼ O.D. output line to an appropriately ranged certified flow transfer standard.

2. Connect another ¼ O.D. Teflon line from the output certified flow transfer standard MFM and vent outside the station.

3. From the Main Menu of the 9100, Select **<FLOW MODE>**.

4. Set MFC 1 "Target" (air) to 0.0 SLPM, and set the Ozone "Target" to 0.00 ppm.

draft

5. The gas MFC is normally calibrated at 5 flow points, approximately 90%, 75%, 50%, 25% and 10% of MFC full-scale range. For a 0 – 100 sccm MFC the typical calibration flow points should be approximately 90, 82, 50, 22 and 12 sccm.

6. Set MFC 2 "Target" (gas) flow to 90 sccm, press **<START>**. Gas flow from the station calibration cylinder can be used to measure the flowrates of MFC 2. **CAUTION: Ensure gas is being vented outside the station.**

7. After reading has stabilized, record the 9100's "Actual Flow", the transfer standard display reading, and calculate and record the true flow from the transfer standard's certification equation.

8. Enter 82 sccm in for the flow rate of the gas, Press **<UPDATE>**.

9. After reading has stabilized, record the 9100's "actual Flow", the transfer standard display reading, and calculate the true flow from the transfer standard's certification equation.

10. Repeat this procedure for the "Target Flow" of 50, 22 and 12 sccm.

11. Once all data points have been recorded press **<STOP>** and return to the Main Menu. If the 9100 being calibrated has multiple gas output ports, each gas output port should be evaluated. If difference between the 9100 flow display and the calculated true flow greater than ± 2 sccm at any of the calibration points, then a "Final" calibration is necessary

12. If a final calibration is not required, disconnect calibration assembly and reconnect output solenoid assembly, manifold connection and digital output connector.

6.7 Final Gas MFC Calibration:

1. If the differences from true stated in section 6.6 step 11 are not met, then a final calibration of MFC 2 is required. From the Main Menu select **<CALIBRATE MODE>**.

2. Enter the password xxxx.

3. The display should read:

   The system is using a single slope and intercept for computing flows.
   adjusted – pressure gauge is on
   Stop Flow when low flow is detected is on

4. Press **<MFC FLOW>**.

5. At MFC 02, Press **<ACCEPT>**, at Port 2, Press **<ACCEPT>**.

6. Enter the flow readings from the "AS-IS" gas MFC calibration into the "Command Column" of the MFC flow calibration table.

7. Enter the values generated by the certified flow transfer standard in the "True Flow" column for the corresponding 90, 82, 50, 22 and 12 SCCM "Command Flow" values.

8. Record the previous slope and intercept before recalculating a new slope and intercept. Press **<CALC>** and Press **<YES>** to question: Do you want a new slope and intercept? Press **<SAVE CALC DATA>**. Press **<YES>** to the question: "Do you really want to?"

9. Record the new slope and intercept generated by this calibration.

10. To exit from this test and return to the Main Menu, Press <**STOP EXIT(s)>**.

12. Run a 5-point verification by repeating steps listed in section 6.7 of this document.

6.8 <u>Ozone Generator Calibration</u>:

1. Use the "Ozone As Is" tab of AQSB Cal Form 700, and fill in as much information as possible before the start of the calibration.

2. Connect the Environics 9100 output to the station manifold. Connect an ozone transfer to an open port on the manifold. **The following set of steps assumes that an ozone analyzer will be calibrated along with the Environics 9100**. If the station ozone analyzer does not need to be calibrated, make the appropriate adjustments.

   a) Zero air flows from the API 701 zero air generators to the inlet of the 9100 (Port 1) @ 35 psig.

   b) The ozone/air mixture flows from the 9100 via Teflon tubing into the highest open port of the station's air inlet manifold.

   c) A port near the bottom of the glass manifold is connected to the ozone transfer standard via ¼ inch OD Teflon tubing.

d) The high ozone point can take as much as 45 minutes to obtain a stable trace. The manifold back pressure should not exceed 1 inch of water.

e) All excess gas is to be vented through the probe line, the station exhaust, or an additional large diameter tube to the outside.

3. From the Main Menu Press **<FLOW MODE>**.

4. Set the Total Flow to **10.0** SLPM. Verify the gas flow is set to 0.00 ppm (this is done by setting the NO "Target Gas" concentration to 0.00), and the ozone to 0.00 ppm.

5. Press **<START>**. Verify the zero air generator output pressure is at 35 psig. Verify that the ozone adjust pressure gauge is on. Operate the Environics 9100 in this mode until a stable zero reading is produced on the transfer standard, the chart recorder, the datalogger, and the ozone analyzer (if being calibrated). **Note the station manifold pressure. It must be positive. If not, turn off the station by-pass pump (if installed)**.

   Record the O3 lamp voltage, ozone generator pressure, O3 block temp and O3 generator flow for each calibration point.

6. Record pre zero readings on the laptop spreadsheet.

7. Next, set a high ozone value near **0.400** ppm, and Press **<UPDATE>**. It may take up to 45 minutes to achieve a stable reading at this level. After the 9100's ozone readings have stabilized on the transfer standard, chart recorder, the datalogger and the ozone analyzer (if being calibrated), record readings. Record the 9100's ozone lamp voltage.

8. Repeat the preceding steps for the **0.320, 0.160, 0.070 and 0.050** ppm concentration levels. The run time for these steps should take approximately 20 minutes each.

9. After all of the points have successfully been collected, set the ozone concentration to 0.0 ppm to generate a post zero reading. When the logger/chart readings indicate a stable zero, or about 20 minutes, record post zero readings.

10. Press **<STOP>** then Press **<EXIT>** to exit the **<FLOW MODE>**, and return to the Main Menu.

draft

11. If the ozone concentration is not **± 4** percent or **4 ppb** (whichever is greater) of expected concentration at each point and the overall percent from true less than 3 percent, then the ozone generator will need a final calibration.

6.9 Final Ozone Generator Calibration:

1. Entering new ozone data. From the Main Menu, Press the **<CALIBRATION MODE>** soft key.

2. At the "Password" prompt, enter the password.

3. Press **<OZONE>**.

4. Enter the **0.05**, **0.07**, **0.160**, **0.320** and **0.400** ppm "Target" ozone values. The "Total Flow" must be set to **10.0** SLPM. Enter the "True" ozone values as calculated from the ozone transfer standard obtained during the "As Is" calibration. Enter the ozone generator pressure measured during the calibration. At altitude, if the transfer standard does not have automatic pressure and temperature correction built-in, use the altitude correction factor equation to compensate for non-standard temperature and pressure.

5. Press **<SAVE DATA>**. Press **<YES>**.

   The display will read: "Last calibration was performed on (today's date).

6. Press **<EXIT(s)>** to return to the Main Menu.

7. Once the new ozone data has been entered into the 9100's microprocessor, a confirming "final" calibration needs to be performed.

8. Repeat the steps listed in section 6.8 steps 3 through 9 of this document.

9. Press **<STOP>, <EXIT>, <EXIT>** to return to the Main Menu.

6.10 Post Calibration Procedures:

1. If time permits, perform a manual calibration with the Environics. To accomplish this, Press **<PROGRAM MODE>**, then Press **<SEQUENCE>**, then Press **<RECALL>**. Select either a span or precision calibration. A precision is preferable. Press **<ACCEPT>** for the appropriate "Register".

draft

Press **<START>**. After the Sequence Program has run, compare the values received from the datalogger with the pollutant values calculated from the gas cylinder concentrations, new air flow rate, and new gas flow rates. See section 6.11 of this document "Calculating expected precision and span concentrations".

2. Program the 9100 to operate for the next day, Press **<PROGRAM MODE>**.

3. Press **<TIMER CONTROL>**. Press **< RECALL>**.

4. Look for the "WEEKLY" program. Press **<Accept 01>** (if this is the "WEEKLY" program). Then, Press **<START>**. Look for the message "waiting for (tomorrow's day) 03:50" towards the bottom of the screen.

5. Return all sampling tubing to their original operating connections. Verify that the Environics 9100 output empties into the station probe inlet line.

6. Plug the "Digital In" connector back into its location in the rear of the datalogger.

7. Turn on the by-pass pump if it was disabled.

8. Verify that the calibration cylinder is ready for use.

9. Verify that the Environics 9100 air supply is set to 35 psig.

10. Enable all disabled datalogger channels.

11. Print out a copy of the laptop calibration report and verify that it is correct, and make copies for the station operator.

12. If necessary, recalculate the stations expected calibration values and update the air quality data system or ESC data logger.

draft

6.11 Calculating Expected Precision and Span Concentrations:

To calculate new precision and span expected calibration values, use the following equation for each pollutant:

Definitions:

a. Fg = gas flow, standard cubic centimeters per minute
b. Fa = air flow, standard cubic centimeters per minute
c. Ft = total air flow = Fa + Fg, standard cubic centimeters per minute
d. Ccyl = compressed gas cylinder concentration, ppm
e. C_{out} = resultant concentration or desired concentration, ppm

$$C_{out} = \frac{Fg \times Ccyl}{Fa + Fg}$$

draft

7.0 TROUBLESHOOTING

The 9100, with few moving parts and a durable electronics package, should provide a high level of reliability. In the event that there is a failure refer to the Environics operating manual section C.1 “Troubleshooting” for detailed troubleshooting guidelines. If problems persist, field staff should contact appropriate air monitoring calibration personnel or the AQSB’s Operations Support Section.

7.1 Troubleshooting Guide for Nightly Calibrations:

Response to Zero/Precision/Span checks on analyzers less than 5 percent.

- No actions necessary

Response to Zero/Precision/Span check on analyzers varies more than 10 percent or 7 percent for Ozone.

- Check for proper zero air supply
- Check 9100 programming and operation
- Check 9100 output tubing to probe and manifold
- Check station bypass pump, if applicable

O3/NO2 OK; All other parameters (CO, SO2, THC, CH4) greater than 5 percent.

- Check certified station cylinder, regulator output, gas tubing.
- Check 9100 air/gas flows.

Only one (O3, NO2, CO, SO2, THC, CH4) not OK

- Check individual instruments and related, supply lines, pumps.
- Check manifold connections and individual tubing.

O3/NO2 not OK, other parameters (CO, SO2, THC, CH4) OK.

- Check 9100 ozone generator.
- Check for proper zero total air flow supply
- Check for proper zero air-flow in O3 generator
- Check individual tubing for O3/NO2 analyzers.
- Check for probe/manifold problems or contamination
- Check dew point levels of zero air supply

draft

CO/SO2	NO	NO2	O3	Probable Cause
Steady	Increasing	Increasing	Steady	NOx Instrument
Decreasing	Steady	Steady	Steady	CO/SO2 Analyzer
Steady	Steady	Increasing	Increasing	9100 Ozone Generator
Decreasing	Decreasing	Decreasing	Steady	MFC 2 (Gas Supply)
Decreasing	Decreasing	Decreasing	Decreasing	MFC 1 (Zero Air Supply)
No Response	No Response	No Response	No Response	9100 not operating
Steady	Steady	Steady	Decreasing	O3 Analyzer
Steady	Steady	Decreasing	Decreasing	9100 Ozone Generator
Steady	Decreasing	Decreasing	Increasing	NOx Analyzer or 9100

Nightly Calibration Troubleshooting Guide (Table 8)

draft

CALIFORNIA AIR RESOURCES BOARD
MONTHLY QUALITY CONTROL MAINTENANCE CHECK SHEET
ENVIRONICS 9100 GAS CALIBRATION SYSTEM
APPENDIX A

Location: _____ Month/Year: _____
Station Number: _____ Technician: _____
Property Number: _____ Agency: _____

OPERATOR INSTRUCTIONS:

1. Daily checks: Check power.
   Check 9100 display. Verify instrument is in TIMER CONROL MODE.
   Check 9100 time and date.
   Review auto calibration data.

2. Weekly Checks: Record zero and precision/span readings for all instruments on appropriate maintenance form.

3. Monthly Checks: Check and record superblend output pressure _____
   Check and record superblend cylinder pressure _____
   Check and record superblend certification date _____
   Check and record 9100 calibration date _____
   Verify that the cooling fan is operating.
   Inspect air and gas line connections. Replace or repair as necessary.

4. Semi-Annual: Perform Field Calibration of Environics 9100.

5. Annual Checks: Change particulate filter on Port 1

Date	Comments or Maintenance Performed:

Reviewed by: _____ Date: _____

draft