Model 42*i*
NO_y

Instruction Manual

Chemiluminescence NO-DIF-NO_y Analyzer

Part Number 102975-00

20Dec2007

CE

Thermo
SCIENTIFIC

© 2007 Thermo Fisher Scientific Inc. All rights reserved.

Specifications, terms and pricing are subject to change. Not all products are available in all countries. Please consult your local sales representative for details.

Thermo Fisher Scientific
Air Quality Instruments
27 Forge Parkway
Franklin, MA 02038
1-508-520-0430
www.thermo.com/aqi

WEEE Compliance

This product is required to comply with the European Union's Waste Electrical & Electronic Equipment (WEEE) Directive 2002/96/EC. It is marked with the following symbol:

Thermo Fisher Scientific has contracted with one or more recycling/disposal companies in each EU Member State, and this product should be disposed of or recycled through them. Further information on Thermo Fisher Scientific's compliance with these Directives, the recyclers in your country, and information on Thermo Fisher Scientific products which may assist the detection of substances subject to the RoHS Directive are available at: www.thermo.com/WEEERoHS.

About This Manual

This manual provides information about operating, maintaining, and servicing the analyzer. It also contains important alerts to ensure safe operation and prevent equipment damage. The manual is organized into the following chapters and appendixes to provide direct access to specific operation and service information.

- Chapter 1 "Introduction" provides an overview of product features, describes the principles of operation, and lists the specifications.
- Chapter 2 "Installation" describes how to unpack, setup, and startup the analyzer.
- Chapter 3 "Operation" describes the front panel display, the front panel pushbuttons, and the menu-driven software.
- Chapter 4 "Calibration" provides the procedures for calibrating the analyzer and describes the required equipment.
- Chapter 5 "Preventative Maintenance" provides maintenance procedures to ensure reliable and consistent instrument operation.
- Chapter 6 "Troubleshooting" presents guidelines for diagnosing analyzer failures, isolating faults, and includes recommended actions for restoring proper operation.
- Chapter 7 "Servicing" presents safety alerts for technicians working on the analyzer, step-by-step instructions for repairing and replacing components, and a replacement parts list. It also includes contact information for product support and technical information.
- Chapter 8 "System Description" describes the function and location of the system components, provides an overview of the software structure, and includes a description of the system electronics and input/output connections.
- Chapter 9 "Optional Equipment" describes the optional equipment that can be used with this analyzer.
- Appendix A "Warranty" is a copy of the warranty statement.
- Appendix B "C-Link Protocol Commands" provides a description of the C-Link protocol commands that can be used to remotely control an analyzer using a host device such as a PC or datalogger.

- Appendix C "MODBUS Protocol" provides a description of the MODBUS Protocol Interface and is supported both over RS-232/485 (RTU protocol) as well as TCP/IP over Ethernet.
- Appendix D "Geysitech (Bayern-Hessen) Protocol" provides a description of the Geysitech (Bayern-Hessen or BH) Protocol Interface and is supported both over RS-232/485 as well as TCP/IP over Ethernet
- Appendix E "Standards for Trace Level Analyzers" provides information about generating zero air.

Safety

Review the following safety information carefully before using the analyzer. This manual provides specific information on how to operate the analyzer, however, if the calibrator is used in a manner not specified by the manufacturer, the protection provided by the equipment may be impaired.

Safety and Equipment Damage Alerts

This manual contains important information to alert you to potential safety hazards and risks of equipment damage. Refer to the following types of alerts you may see in this manual.

Safety and Equipment Damage Alert Descriptions

Alert		Description
⚠	**DANGER**	A hazard is present that will result in death or serious personal injury if the warning is ignored. ▲
⚠	**WARNING**	A hazard is present or an unsafe practice can result in serious personal injury if the warning is ignored. ▲
⚠	**CAUTION**	The hazard or unsafe practice could result in minor to moderate personal injury if the warning is ignored. ▲
⚠	**Equipment Damage**	The hazard or unsafe practice could result in property damage if the warning is ignored. ▲

Safety and Equipment damage Alerts in this Manual

Alert		Description
⚠	**WARNING**	If the equipment is operated in a manner not specified by the manufacturer, the protection provided by the equipment may be impaired. ▲
		The service procedures in this manual are restricted to qualified service personnel only. ▲
		The Model 42*i*-NO_y is supplied with a three-wire grounding cord. Under no circumstances should this grounding system be defeated. ▲
⚠	**CAUTION**	Ozone is present in the exhaust, therefore, the exhaust should be plumbed to a suitable vent. ▲
		If the LCD panel breaks, do not to let the liquid crystal contact your skin or clothes. If the liquid crystal contacts your skin or clothes, wash it off immediately using soap and water. ▲
⚠	**Equipment Damage**	Do not attempt to lift the analyzer by the cover or other external fittings. ▲
		Some internal components can be damaged by small amounts of static electricity. A properly grounded antistatic wrist strap must be worn while handling any internal component. ▲
		This adjustment should only be performed by an instrument service technician. ▲
		Handle all printed circuit boards by the edges only. ▲
		Do not remove the panel or frame from the LCD module. ▲
		The LCD module polarizing plate is very fragile, handle it carefully. ▲
		Do not wipe the LCD module polarizing plate with a dry cloth, it may easily scratch the plate. ▲
		Do not use Ketonics solvent or aromatic solvent to clean the LCD module, use a soft cloth moistened with a naphtha cleaning solvent. ▲
		Do not place the LCD module near organic solvents or corrosive gases. ▲
		Do not shake or jolt the LCD module. ▲

FCC Compliance

Changes or modifications to this unit not expressly approved by the party responsible for compliance could void the user's authority to operate the equipment.

Note This equipment has been tested and found to comply with the limits for a Class A digital device, pursuant to Part 15 of the FCC Rules. These limits are designed to provide reasonable protection against harmful interference when the equipment is operated in a commercial environment. This equipment generates, uses, and can radiate radio frequency energy and, if not installed and used in accordance with the instruction manual, may cause harmful interference to radio communications. Operation of this equipment in a residential area is likely to cause harmful interference in which case the user will be required to correct the interference at his own expense. ▲

WEEE Symbol

The following symbol and description identify the WEEE marking used on the instrument and in the associated documentation.

Symbol	Description
	Marking of electrical and electronic equipment which applies to electrical and electronic equipment falling under the Directive 2002/96/EC (WEEE) and the equipment that has been put on the market after 13 August 2005. ▲

Where to Get Help

Service is available from exclusive distributors worldwide. Contact one of the phone numbers below for product support and technical information or visit us on the web at www.thermo.com/aqi.

1-866-282-0430 Toll Free

1-508-520-0430 International

Contents

Chapter 1 **Introduction 1-1**
Principle of Operation 1-2
Specifications 1-4

Chapter 2 **Installation 2-1**
Lifting 2-1
Unpacking and Inspection 2-1
Setup Procedure 2-2
Connecting External Devices 2-8
Terminal Board PCB Assemblies 2-8
I/O Terminal Board 2-8
D/O Terminal Board 2-10
25-Pin Terminal Board 2-11
Startup 2-12

Chapter 3 **Operation 3-1**
Display 3-1
Pushbuttons 3-2
Soft Keys 3-3
Software Overview 3-4
Power-Up Screen 3-6
Run Screen 3-6
Main Menu 3-7
Range Menu 3-8
Single Range Mode 3-8
Dual Range Mode 3-9
Auto Range Mode 3-11
Gas Units 3-13
NO, DIF, and NO_y Ranges 3-13
Set Custom Ranges 3-14
Custom Ranges 3-15
Averaging Time 3-15
Calibration Factors Menu 3-16
NO, NO_y, and Prereactor Backgrounds 3-17
NO, DIF, and NO_y Coefficients 3-18
Reset User Calibration Default 3-19
Calibration Menu 3-19
Calibrate NO, NO_y and Prereactor Backgrounds 3-20
Calibrate NO, DIF or NO_y Coefficients 3-21

Zero/Span Check 3-21
Next Time 3-22
Period Hours 3-22
Zero/Span/Purge Duration Minutes 3-23
Zero/Span Averaging Time 3-23
Zero/Span Ratio 3-24
Instrument Controls Menu 3-24
Ozonator 3-24
PMT Supply 3-25
Auto/Manual Mode 3-25
Datalogging Settings 3-26
Select SREC/LREC 3-26
View Logged Data 3-27
Number of Records 3-27
Date and Time 3-28
Erase Log 3-28
Select Content 3-29
Concentrations 3-29
Other Measurements 3-30
Analog Inputs 3-31
Commit Content 3-31
Reset to Default Content 3-31
Configure Datalogging 3-32
Logging Period Min 3-32
Memory Allocation Percent 3-33
Data Treatment 3-33
Communication Settings 3-33
Baud Rate 3-34
Instrument ID 3-34
Communication Protocol 3-35
Streaming Data Configuration 3-35
Streaming Data Interval 3-36
Concentrations 3-36
Other Measurements 3-37
Analog Inputs 3-37
RS-232/RS-485 Selection 3-38
TCP/IP Settings 3-38
Use DHCP 3-39
IP Address 3-39
Netmask 3-39
Default Gateway 3-40
Host Name 3-40
I/O Configuration 3-41
Output Relay Settings 3-41
Logic State 3-41
Instrument State 3-42

Alarms ... 3-42
Non-Alarm ... 3-43
Digital Input Settings ... 3-43
Logic State ... 3-44
Instrument Action ... 3-44
Analog Output Configuration ... 3-45
Select Output Range ... 3-45
Minimum and Maximum Value ... 3-46
Choose Signal to Output ... 3-47
Analog Input Configuration ... 3-48
Descriptor ... 3-49
Units ... 3-49
Decimal Places ... 3-50
Number of Table Points ... 3-50
Table Point ... 3-50
Volts ... 3-51
User Value ... 3-51
Temperature Compensation ... 3-52
Pressure Compensation ... 3-52
Screen Contrast ... 3-53
Service Mode ... 3-53
Date/Time ... 3-54
Diagnostics Menu ... 3-54
Program Versions ... 3-55
Voltages ... 3-55
Motherboard Voltages ... 3-56
Interface Board Voltages ... 3-56
I/O Board Voltages ... 3-56
External Converter Board Voltages ... 3-57
Temperatures ... 3-57
Pressure ... 3-58
Flow ... 3-58
Prereactor Zero ... 3-58
Analog Input Readings ... 3-59
Analog Input Voltages ... 3-59
Digital Inputs ... 3-59
Relay States ... 3-60
Test Analog Outputs ... 3-60
Set Analog Outputs ... 3-60
Instrument Configuration ... 3-61
Contact Information ... 3-61
Alarms Menu ... 3-62
Internal Temperature ... 3-63
Min and Max Internal Temperature Limits ... 3-63
Chamber Temperature ... 3-64
Min and Max Chamber Temperature Limits ... 3-64

Cooler Temperature 3-64
Min and Max Cooler Temperature Limits 3-65
External Converter Temperature 3-65
Min and Max External Converter Temperature Limits 3-66
Pressure 3-66
Min and Max Pressure Limits 3-67
Flow 3-67
Min and Max Flow Limits 3-67
Ozonator Flow 3-68
Zero and Span Check 3-68
Max Zero and Span Offset 3-69
Zero and Span Auto Calibration 3-69
NO, DIF, and NO_y Concentration 3-69
Min and Max NO, DIF, and NO_y Concentration Limits 3-70
Min Trigger 3-70
Prereator Concentration 3-71
Min and Max Prereactor Concentration Limits 3-71
Min Trigger 3-72
Service Menu 3-72
PMT Voltage Adjustment 3-73
Range Mode Select 3-73
External Converter Set Temperature 3-74
Pressure Calibration 3-74
Calibrate Pressure Zero 3-75
Calibrate Pressure Span 3-75
Restore Default Calibration 3-76
Flow Calibration 3-76
Calibrate Flow Zero 3-77
Calibrate Flow Span 3-77
Restore Default Flow Calibration 3-78
Input Board Calibration 3-78
Manual Input Calibration 3-78
Automatic Input Calibration 3-79
Input Frequency Display 3-80
Temperature Calibration 3-80
Analog Output Calibration 3-81
Analog Output Calibrate Zero 3-82
Analog Output Calibrate Full-Scale 3-82
Analog Input Calibration 3-82
Analog Input Calibrate Zero 3-83
Analog Input Calibrate Full-Scale 3-83
Ozonator Safety 3-84
Dilution Ratio 3-84
Display Pixel Test 3-85
Restore User Defaults 3-85
Password Menu 3-85

Set Password 3-86
Lock Instrument 3-86
Change Password 3-86
Remove Password 3-87
Unlock Instrument 3-87

Chapter 4 Calibration 4-1
Calibration Equipment 4-1
Zero Gas Generator 4-2
Compression 4-2
Drying 4-2
Oxidation 4-2
Scrubbing 4-2
Gas Phase Titrator 4-3
Flow Controllers 4-3
Pressure Regulator 4-3
Ozone Generator 4-4
Diverter Valve 4-4
Reaction Chamber 4-4
Mixing Chamber 4-4
Output Manifold 4-4
Reagents 4-4
NO Concentration Standard 4-4
Assaying a Working NO Standard Against a NIST-traceable NO Standard 4-5
Zero Air 4-6
Dynamic Parameter Specifications for Gas Titrator 4-6
Determining GPT System Flow Conditions 4-6
Pre-Calibration 4-8
Calibration 4-9
Connect GPT Apparatus to the Analyzer 4-9
Adjust Instrument Gain 4-10
Set Backgrounds to Zero 4-10
Calibrate the NO Channel to the NO Calibration Gas 4-12
Calibrate the NO_y Channel to the NO_y Calibration Gas 4-12
Preparing NO, NO_y, and DIF Calibration Curves 4-13
Alternative Calibration Procedure Using NO_2 Permeation Tube 4-16
Calibration in Dual Range and Auto Range Mode 4-16
Set Background Readings to Zero 4-16
Calibrate Low NO 4-17
Calibrate Low NO_y 4-18
Calibrate Low DIF 4-18
Calibrate High NO 4-19
Calibrate High NO_y 4-19
Calibrate High DIF 4-20
Zero and Span Check 4-21

Chapter 5 Preventative Maintenance 5-1
Safety Precautions 5-1
Replacement Parts 5-2
Cleaning the Outside Case 5-2
Ozonator Air Feed Drying Column Replacement 5-2
Sample Filters Inspection and Replacement 5-2
Capillaries Inspection and Replacement 5-3
Bypass Pump Capillaries Inspection and Replacement 5-4
Thermoelectric Cooler Fins Inspection and Cleaning 5-6
Fan Filters Inspection and Cleaning 5-6
Leak Test 5-7
Pump Rebuilding 5-7
Bypass Pump Rebuilding 5-10

Chapter 6 Troubleshooting 6-1
Safety Precautions 6-1
Troubleshooting Guides 6-1
Board-Level Connection Diagrams 6-5
Connector Pin Descriptions 6-7
Service Locations 6-21

Chapter 7 Servicing 7-1
Safety Precautions 7-2
Firmware Updates 7-4
Accessing the Service Mode 7-4
Replacement Parts List 7-4
Cable List 7-6
External Device Connection Components 7-7
Removing the Measurement Bench and Lowering the Partition Panel 7-10
Pump Replacement 7-11
Vacuum Pump Diaphragm and Valve Replacement 7-12
Diaphragm Replacement 7-13
Valve Replacement 7-14
Bypass Pump Replacement 7-16
Fan Replacement 7-17
PMT Cooler and Reaction Chamber Assembly Replacement 7-18
Photomultiplier Tube Replacement 7-20
PMT High Voltage Power Supply Replacement 7-21
PMT Voltage Adjustment 7-23
Reaction Chamber Cleaning or Removal 7-23
External Converter Replacement 7-25
Solenoid Valve Replacement 7-27
Ozonator Assembly Replacement 7-28

Ozonator Transformer Replacement 7-30
Input Board Replacement 7-30
Input Board Calibration 7-32
DC Power Supply Replacement 7-32
Analog Output Testing 7-33
Analog Output Calibration 7-36
Analog Input Calibration 7-37
Calibrating the Input Channels to Zero Volts 7-37
Calibrating the Input Channels to Full-Scale 7-37
Pressure Transducer Assembly Replacement 7-38
Pressure Transducer Calibration 7-39
Temperature Control Board Replacement 7-41
Ambient Temperature Calibration 7-42
Fuse Replacement 7-43
I/O Expansion Board (Optional) Replacement 7-43
Digital Output Board Replacement 7-45
Motherboard Replacement 7-46
Measurement Interface Board Replacement 7-47
External Converter Interface Board Replacement 7-48
Flow Transducer Replacement 7-49
Flow Transducer Calibration 7-50
Front Panel Board Replacement 7-51
LCD Module Replacement 7-52
Service Locations 7-53

Chapter 8 System Description 8-1
Hardware 8-1
External Converter 8-3
Mode Solenoids 8-3
Reaction Chamber 8-3
Prereactor Solenoid 8-4
Optical Filter 8-4
Pressure Transducer 8-4
Sample Flow Sensor 8-4
Ozonator 8-4
Ozonator Flow Switch 8-4
Prereactor 8-4
Photomultiplier Tube 8-4
Photomultiplier Tube Cooler 8-5
External Pump 8-5
Sample Capillary 8-5
Dry Air Capillary 8-5
Bypass Pump Assembly 8-5
Capillaries 8-5
Teflon Particulate Filter 8-5
Software 8-5

Instrument Control 8-5
Monitoring Signals 8-6
Measurement Calculations 8-6
Output Communication 8-7
Electronics 8-7
Motherboard 8-7
External Connectors 8-8
Internal Connectors 8-8
Measurement Interface Board 8-8
Measurement Interface Board Connectors 8-8
External Converter Interface Board 8-9
External Converter Interface Board Connectors 8-9
Flow Sensor Assembly 8-9
Pressure Sensor Assembly 8-9
Temperature Control Board 8-9
PMT Power Supply Assembly 8-10
Input Board Assembly 8-10
Digital Output Board 8-10
I/O Expansion Board (Optional) 8-10
Front Panel Connector Board 8-10
I/O Components 8-11
Analog Voltage Outputs 8-11
Analog Current Outputs (Optional) 8-11
Analog Voltage Inputs (Optional) 8-12
Digital Relay Outputs 8-12
Digital Inputs 8-12
Serial Ports 8-13
RS-232 Connection 8-13
RS-485 Connection 8-14
Ethernet Connection 8-14
External Accessory Connector 8-14

Chapter 9 Optional Equipment 9-1
Internal Zero/Span and Sample Valves 9-1
Ozonator Permeation Dryer 9-1
Ozone Particulate Filter 9-1
I/O Expansion Board Assembly 9-2
Terminal Block and Cable Kits 9-2
Cables 9-2
Mounting Options 9-4

Appendix A Warranty A-1

Appendix B C-Link Protocol Commands B-1
Instrument Identification Number B-1

Commands B-2
Commands List B-2
Measurements B-9
Alarms B-13
Diagnostics B-17
Datalogging B-17
Calibration B-26
Keys/Display B-29
Measurement Configuration B-31
Hardware Configuration B-34
Communications Configuration B-38
I/O Configuration B-42
Record Layout Definition B-46
Format Specifier for ASCII Responses B-47
Format Specifier for Binary Responses B-47
Format Specifier for EREC Layout B-48
Text B-48
Value String B-48
Value Source B-48
Alarm Information B-49
Translation Table B-49
Selection Table B-49
Button Designator B-49
Examples B-50

Appendix C MODBUS Protocol C-1
Serial Communication Parameters C-1
TCP Communication Parameters C-2
Application Data Unit Definition C-2
Slave Address C-2
MBAP Header C-2
Function Code C-3
Data C-3
Error Check C-3
Function Codes C-3
(0x01/0x02) Read Coils / Read Inputs C-3
(0x03/0x04) Read Holding Registers / Read Input Registers C-5
(0x05) Force (Write) Single Coil C-7
MODBUS Parameters Supported C-8

Appendix D Geysitech (Bayern-Hessen) Protocol D-1
Serial Communication Parameters D-1
TCP Communication Parameters D-2
Instrument Address D-2
Abbreviations Used D-2

Basic Command Structure D-2
Block Checksum <BCC> D-3
Geysitech Commands D-3
Instrument Control Command (ST) D-3
Data Sampling/Data Query Command (DA) D-4
Measurements reported in response to DA command D-6
Single Range Mode D-6
Dual/Auto Range Mode D-6
Operating and Error Status D-7

Appendix E Standards for Trace Level Analyzers E-1

Figures

Figure 1–1. Model 42*i* NO_y External Molybdenum Converter 1-3
Figure 1–2. Model 42*i* NO_y Flow Schematic 1-3
Figure 2–1. Remove the Packing Material 2-2
Figure 2–2. Model 42*i* NO_y Rear Panel 2-3
Figure 2–3. Bypass Pump Assembly Rear Panel 2-4
Figure 2–4. Atmospheric Dump Bypass Plumbing 2-4
Figure 2–5. Twin-Head Vacuum Pump Installation 2-5
Figure 2–6. Model 42*i* NO_y Typical Installation Diagram 2-7
Figure 2–7. I/O Terminal Board Views 2-9
Figure 2–8. D/O Terminal Board Views 2-10
Figure 2–9. 25-Pin Terminal Board Views 2-11
Figure 3–1. Front Panel Display 3-2
Figure 3–2. Front Panel Pushbuttons 3-2
Figure 3–3. Flowchart of Menu-Driven Software 3-5
Figure 3–4. Pin-Out of Rear Panel Connector in Single Range Mode 3-9
Figure 3–5. Pin-Out of Rear Panel Connector in Dual Range Mode 3-10
Figure 3–6. Analog Output in Auto Range Mode 3-11
Figure 3–7. Pin-Out of Rear Connector in Auto Range Mode 3-12
Figure 4–1. GPT System 4-3
Figure 5–1. Inspecting and Replacing the Capillaries 5-3
Figure 5–2. Inspecting and Replacing the Bypass Pump Capillaries 5-5
Figure 5–3. Inspecting and Cleaning the Fan Filters 5-7
Figure 5–4. Rebuilding the Pump 5-9
Figure 5–5. Rebuilding the Bypass Pump 5-11
Figure 6–1. Board-Level Connection Diagram - Common Electronics 6-5
Figure 6–2. Board-Level Connection Diagram - Measurement System 6-6
Figure 6–3. Board-Level Connection Diagram - External Converter 6-7
Figure 7–1. Properly Grounded Antistatic Wrist Strap 7-4
Figure 7–2. Component Layout for Analyzer 7-8
Figure 7–3. Component Layout for External Converter 7-9
Figure 7–4. Component Layout for Bypass Pump 7-9
Figure 7–5. Removing the Measurement Bench and Lowering the Partition Panel 7-10
Figure 7–6. Replacing the Pump 7-12
Figure 7–7. Vacuum Pump – Head Plate and Motor View 7-15

Figure 7–8. Replacing the Bypass Pump....7-17
Figure 7–9. Replacing the Fan....7-18
Figure 7–10. PMT Cooler and Reaction Chamber....7-19
Figure 7–11. Replacing the PMT....7-21
Figure 7–12. Replacing the PMT HVPS....7-22
Figure 7–13. Cleaning or Removing the Reaction Chamber....7-25
Figure 7–14. External Molybdenum Converter Assembly....7-26
Figure 7–15. Replacing the Solenoid Valve....7-28
Figure 7–16. Replacing the Ozonator Assembly....7-29
Figure 7–17. Replacing the Input Board....7-31
Figure 7–18. Replacing the DC Power Supply....7-33
Figure 7–19. Rear Panel Analog Input and Output Pins....7-34
Figure 7–20. Replacing the Pressure Transducer....7-39
Figure 7–21. Replacing the I/O Expansion Board (Optional)....7-44
Figure 7–22. Rear Panel Board Connectors....7-45
Figure 7–23. Replacing the Measurement Interface Board....7-48
Figure 7–24. Replacing the Flow Transducer....7-49
Figure 7–25. Replacing the Front Panel Board and the LCD Module....7-52
Figure 8–1. Analyzer Hardware Components....8-2
Figure 8–2. External Converter Hardware Components....8-2
Figure 8–3. Bypass Pump Hardware Components....8-3
Figure 9–1. Rack Mount Option Assembly....9-4
Figure 9–2. Bench Mounting....9-5
Figure 9–3. EIA Rack Mounting....9-6
Figure 9–4. Retrofit Rack Mounting....9-7
Figure B–1. Flags....B-13

Tables

Table 1–1. Model 42*i* NO_y Specifications 1-4
Table 2–1. NO_y Converter Interface Board DC/Data Wiring 2-6
Table 2–2. NO_y Converter Interface Board AC Wiring 2-6
Table 2–3. I/O Terminal Board Pin Descriptions 2-9
Table 2–4. D/O Terminal Board Pin Descriptions 2-10
Table 2–5. 25-Pin Terminal Board Pin Descriptions 2-11
Table 3–1. Front Panel Pushbuttons 3-3
Table 3–2. Default Analog Outputs in Single Range Mode 3-9
Table 3–3. Default Analog Outputs in Dual Range Mode 3-10
Table 3–4. Default Analog Outputs in Auto Range Mode 3-12
Table 3–5. Available Operating Ranges 3-14
Table 3–6. Analog Output Zero to Full-Scale Table 3-46
Table 3–7. Signal Type Group Choices 3-48
Table 4–1. Scrubbing Materials 4-3
Table 6–1. Troubleshooting - General Guide 6-2
Table 6–2. Troubleshooting - Alarm Messages 6-3
Table 6–3. Motherboard Connector Pin Descriptions 6-7
Table 6–4. Measurement Interface Board Connector Pin Descriptions 6-12
Table 6–5. Front Panel Board Connector Pin Diagram 6-15
Table 6–6. I/O Expansion Board (Optional) Connector Pin Descriptions 6-16
Table 6–7. Digital Output Board Connector Pin Descriptions 6-18
Table 6–8. Input Board Connector Pin Descriptions 6-19
Table 6–9. Temperature Control Board Connector Pin Descriptions 6-20
Table 6–10. External Converter Board Connector Pin Descriptions 6-20
Table 7–1. Model 42*i* NO_y Replacement Parts 7-4
Table 7–2. Model 42*i* NO_y Cables 7-6
Table 7–3. External Device Connection Components 7-7
Table 7–4. Analog Output Channels and Rear Panel Pin Connections 7-35
Table 7–5. Analog Input Channels and Rear Panel Pin Connections 7-35
Table 8–1. RS-232 DB Connector Pin Configurations 8-13
Table 8–2. RS-485 DB Connector Pin Configuration 8-14
Table 9–1. Cable Options 9-3
Table 9–2. Color Codes for 25-Pin and 37-Pin Cables 9-3
Table 9–3. Mounting Options 9-4
Table B–1. C-Link Protocol Commands B-2

Table B–2. Averaging Times....B-10
Table B–3. Alarm Trigger Values....B-17
Table B–4. Record Output Formats....B-22
Table B–5. Stream Time Values....B-26
Table B–6. Standard Ranges....B-31
Table B–7. Contrast Levels....B-35
Table B–8. Reply Termination Formats....B-40
Table B–9. Analog Current Output Range Values....B-42
Table B–10. Analog Voltage Output Range Values....B-43
Table B–11. Default Output Assignment....B-44
Table C–1. Read Coils for Model 42*i* NO_y....C-8
Table C–2. Read Registers for Model 42*i* NO_y....C-9
Table C–3. Write Coils for Model 42*i* NO_y....C-11
Table D–1. Operating Status for Model 42*i* NO_y....D-7
Table D–2. Error Status for Model 42*i* NO_y....D-7

Chapter 1
Introduction

The Model 42*i* NO_y Chemiluminescence Analyzer combines proven detection technology, easy to use menu-driven software, and advanced diagnostics to offer unsurpassed flexibility and reliability. The Model 42*i* NO_y has the following features:

- 320 x 240 graphics display
- Menu-driven software
- Field programmable ranges
- User-selectable single/dual/auto range modes
- Multiple user-defined analog outputs
- Analog input options
- Detection limits of 50 ppt or better
- Fast response time
- Linearity through all ranges
- Standard prereactor for continuous zero correction
- Independent NO-DIF-NO_y ranges
- Replaceable NO_y converter cartridge
- User-selectable digital input/output capabilities
- Standard communications features include RS232/485 and Ethernet
- C-Link, MODBUS, Geysitech (Bayern-Hessen), and streaming data protocols

For details of the analyzer's principle of operation and product specifications, see the following topics:

- "Principle of Operation" on page 1-2
- "Specifications" on page 1-4

Thermo Fisher Scientific is pleased to supply this chemiluminescence NO_y analyzer. We are committed to the manufacture of instruments exhibiting high standards of quality, performance, and workmanship. Service personnel are available for assistance with any questions or problems that may arise in the use of this analyzer. For more information on servicing, see Chapter 7, "Servicing".

Principle of Operation

The Model 42*i* NO_y operates on the principle that nitric oxide (NO) and ozone (O_3) react to produce a characteristic luminescence with an intensity linearly proportional to the NO concentration. Infrared light emission results when electronically excited NO_2 molecules decay to lower energy states. Specifically:

$$NO + O_3 \rightarrow NO_2 + O_2 + h\nu$$

NO_y compounds (other than NO) must first be transformed into NO before they can be measured using the chemiluminescent reaction. They are converted to NO by a molybdenum converter heated to about 325 °C.

NO_y is the sum of all reactive oxides of nitrogen (NO, NO_2, NO_3, N_2O_5, HNO_2, HNO_3, PAN, organic nitrates and aerosol nitrates). To minimize the loss of NO_y prior to measurement, an external converter (molybedenum) module (Figure 1–1) that limits sample transport time and surface contact area is used. From the external converter, a flow arrangement using an external bypass pump to rapidly draw sample from the converter module for both NO and NO_y channels is used.

After exiting the converter module, the analyzer draws a slip stream for each channel to feed the internal mode valve (NO or NO_y) within the analyzer module (Figure 1–2). When the solenoid is normally open (NO mode), sample that has bypassed the converter is sent to the reaction chamber. When the solenoid mode is normally closed (NO_y mode), sample that has passed through the converter is sent to the reaction chamber for analysis.

A third mode routes the sample to a prereactor to create a dynamic zero reading for the analyzer. The prereactor is sized so that greater than 99% of a 200 ppb NO sample will react prior to entering the reaction chamber but is small enough to allow interferents (olefins) to pass onto the chamber.

The combination of the three modes generates three signals: NO, NO_y, and the difference between the two (DIF).

Dry air enters the Model 42*i* NO_y through the *dry air* bulkhead, passes through a flow switch, and then through a silent discharge ozonator. The ozonator generates the ozone needed for the chemiluminescent reaction. At the reaction chamber, the ozone reacts with the NO in the sample to produce excited NO_2 molecules. A photomultiplier tube (PMT) housed in a thermoelectric cooler detects the luminescence generated during this reaction. From the reaction chamber, the sample travels to the exhaust fitting, then to the pump.

The NO and NO_y concentrations calculated in the NO and NO_y modes are stored in memory. The difference between the concentrations is used to calculate the DIF concentration. The Model 42*i* NO_y outputs NO, DIF, and NO_y concentrations to the front panel display, the analog outputs, and also makes the data available over the serial or Ethernet connection.

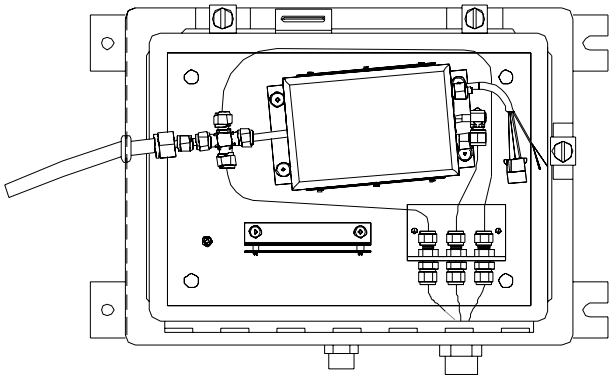

Figure 1–1. Model 42*i* NO_y External Molybdenum Converter

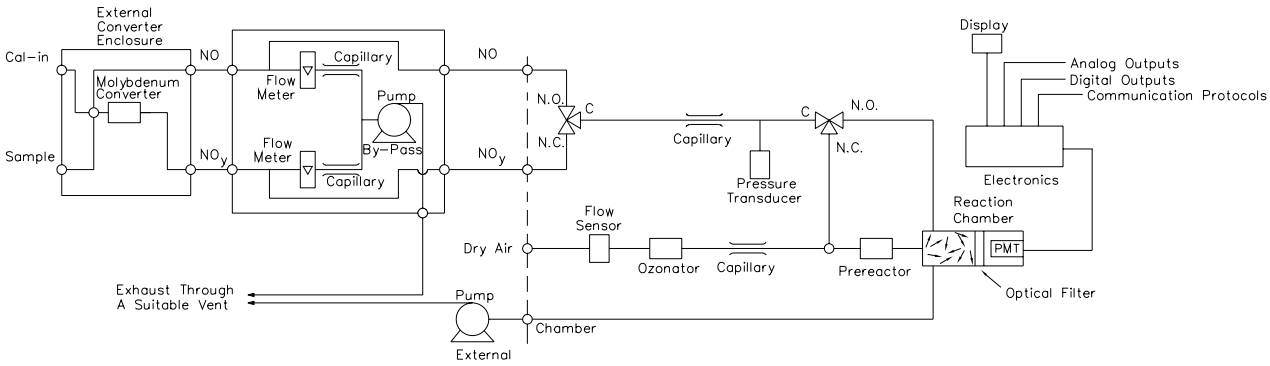

Figure 1–2. Model 42*i* NO_y Flow Schematic

Specifications

Table 1–1 lists the specifications for the Model 42*i* NO_y.

Table 1–1. Model 42*i* NO_y Specifications

Preset ranges	0-5, 10, 20, 50, 100, 200 ppb 0-10, 20, 50, 100, 200, 500 µg/m^3
Custom ranges	0-50 to 200 ppb 0-10 to 500 µg/m^3
Zero roise	25 ppt RMS (120 second averaging time)
Lower detectable limit	50 ppt (120 second averaging time)
Zero drift (24 hour)	Negligible
Span drift	±1% full-scale
Response time (in automatic mode)	60 seconds (10 second averaging time) 90 seconds (60 second averaging time) 300 seconds (300 second averaging time)
Linearity	±1% full-scale
Sample flow rate	1 LPM
Operating temperature	15–35 °C (may be safely operated over the 5–40 °)*
Power requirements	100 VAC @ 50/60 Hz 115 VAC @ 50/60 Hz 220–240 VAC @ 50/60 Hz 300 watts
Physical dimensions	16.75″ (W) X 8.62″ (H) X 23″ (D)
Weight	Approximately 60 lbs. (including external pump)
Analog outputs	6 voltage outputs; 0–100 mV, 1, 5, 10 V (User selectable), 5% of full-scale over/under range, 12 bit resolution, user programmable
Digital outputs	1 power fail relay Form C, 10 digital relays Form A, user selectable alarm output, relay logic, 100 mA @ 200 VDC
Digital inputs	16 digital inputs, user select programmable, TTL level, pulled high
Serial Ports	1 RS-232 or RS-485 with two connectors, baud rate 1200–115200, Protocols: C-Link, MODBUS, Geysitech (Bayern-Hessen), and streaming data (all user selectable)
Ethernet connection	RJ45 connector for 10Mbs Ethernet connection, static or dynamic TCP/IP addressing

*In non-condensing environments. Performance specifications based on operation in 15–35 °C range.

Chapter 2
Installation

Installing the Model 42*i* NO_y includes the following recommendations and procedures:

- "Lifting" on page 2-1
- "Unpacking and Inspection" on page 2-1
- "Setup Procedure" on page 2-2
- "Connecting External Devices" on page 2-8
- "Startup" on page 2-12

Lifting

When lifting the instrument, use procedure appropriate to lifting a heavy object, such as, bending at the knees while keeping your back straight and upright. Grasp the instrument at the bottom in the front and at the rear of the unit. Although one person can lift the unit, it is desirable to have two persons lifting, one by grasping the bottom in the front and the other by grasping the bottom in the rear.

Equipment Damage Do not attempt to lift the instrument by the cover or other external fittings. ▲

Unpacking and Inspection

The Model 42*i* NO_y is shipped complete in multiple containers. If there is obvious damage to the shipping containers when you receive the instrument, notify the carrier immediately and hold for inspection. The carrier is responsible for any damage incurred during shipment.

Use the following procedure to unpack and inspect the instrument.

1. Remove the instrument from its shipping container and set it on a table or bench that allows easy access to both the front and rear.

2. Remove the cover to expose the internal components.

3. Remove the packing material (Figure 2–1).

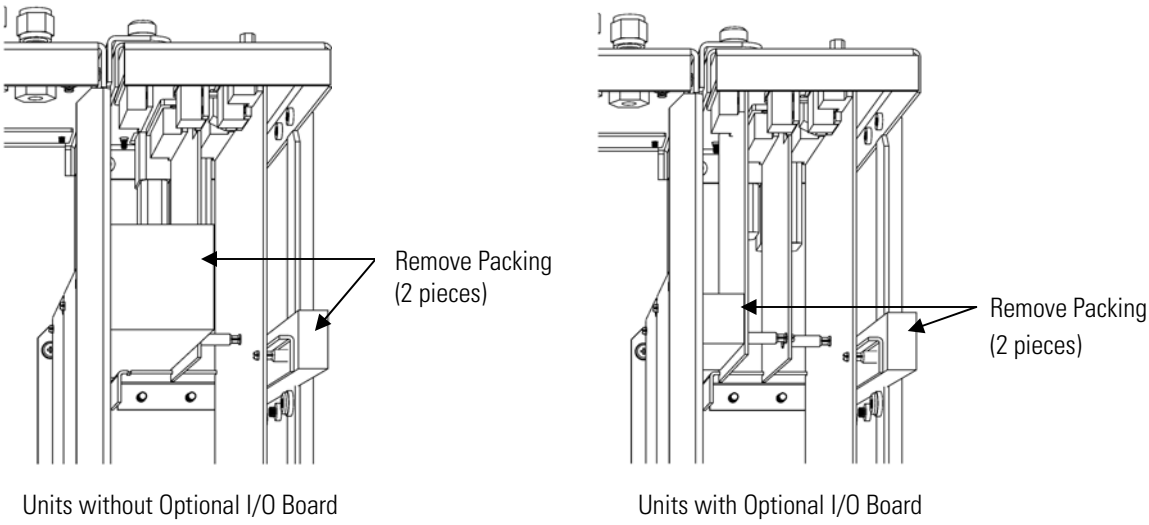

Figure 2–1. Remove the Packing Material

4. Check for possible damage during shipment.

5. Check that all connectors and circuit boards are firmly attached.

6. Re-install the cover.

7. Remove any protective plastic material from the case exterior.

8. Remove the external converter module and conduit from their shipping containers.

9. Remove the external pump from its shipping container and place next to the instrument.

Setup Procedure

Use the following procedure to setup the instrument:

1. Refer to Figure 2–6 for the following connections. Ensure that the sample line is not contaminated by dirty, wet, or incompatible materials. All tubing should be constructed of FEP Teflon®, 316 stainless steel, borosilicate glass, or similar tubing with an OD of 1/4-inch and a minimum ID of 1/8-inch.

2. Cut conduit to proper length.

3. Run the NO and NO_y sample tubing and the CAL tubing along with the 5-conductor data cable in the 3/4-inch conduit.

4. Inside the external converter assembly, run the tubing through the bulkhead fittings and connect the NO and CAL tubing to the cross connector on the input to the converter and connect the NO_y tubing to the output of the converter.

5. At the back of the bypass pump assembly, connect the NO and NO_y tubing to the appropriately labeled bulkheads (Figure 2–3).

6. Connect tubing and sample filters between the bypass pump assembly and the rear of the analyzer (Figure 2–2).

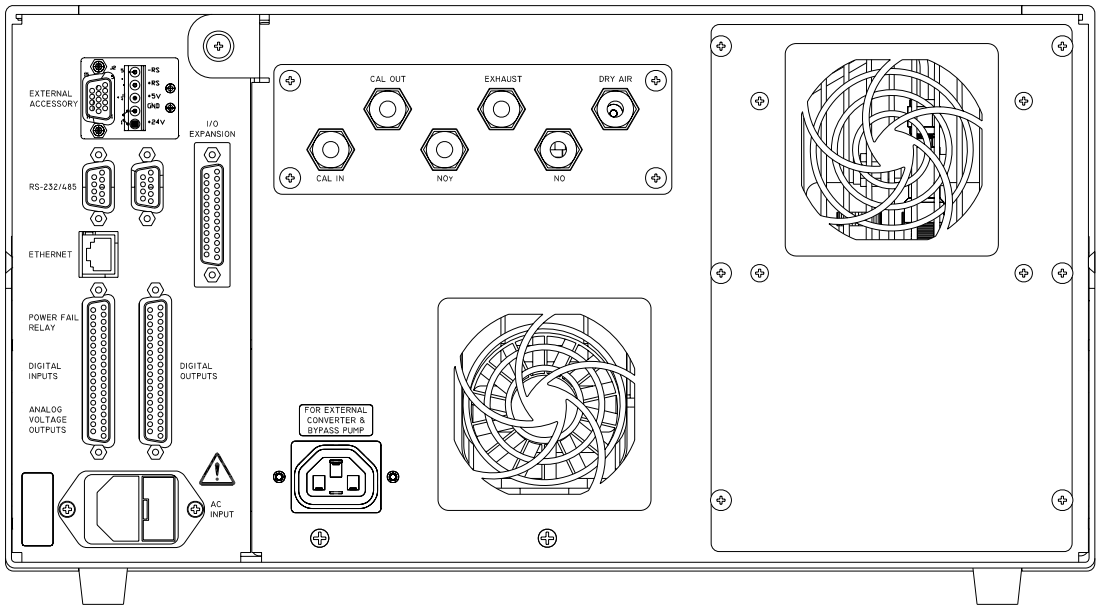

Figure 2–2. Model 42*i* NO_y Rear Panel

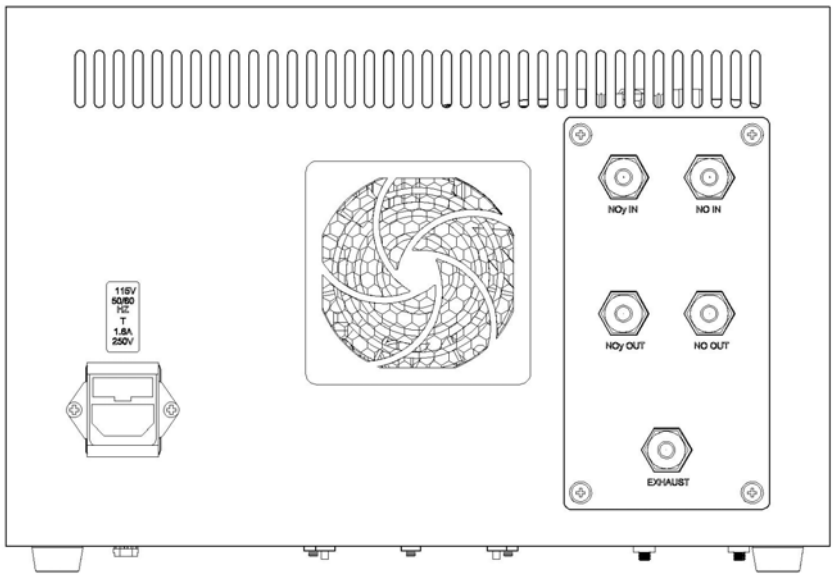

Figure 2–3. Bypass Pump Assembly Rear Panel

7. Connect the CAL tubing from the external converter module to the calibration gas source (such as a Model 146*i* calibrator).

Note Gas must be delivered to the instrument at atmospheric pressure. It may be necessary to use an atmospheric bypass plumbing arrangement as shown in Figure 2–4 if gas pressure is greater than atmospheric pressure. ▲

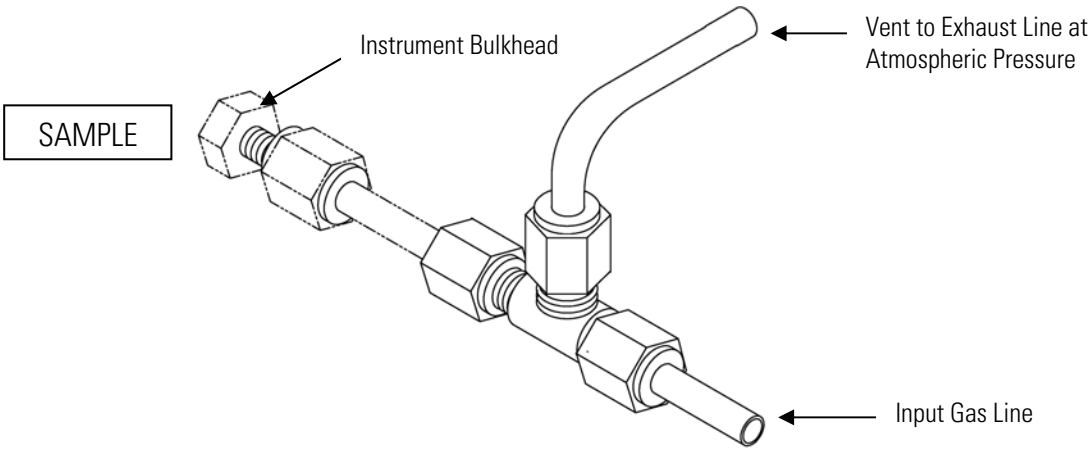

Figure 2–4. Atmospheric Dump Bypass Plumbing

8. Connect the DC/Data cable to the 5 position terminal board on the rear of the analyzer and the 5 position terminal block on the NO_y Interface Board inside the external converter assembly (Table 2–1).

9. Attach the AC Y adapter cable to the rear panel of the instrument.

10. Run the AC cable in the 1/2-inch conduit and connect the connector end to the Y adapter and the other end to the 3 position terminal block on the NO_y Interface Board and the grounding stud in the external converter assembly (Table 2–2).

11. Attach the AC cable between the bypass pump assembly and the other side of the AC Y adapter on the rear of the analyzer.

12. Connect the air dryer to the DRY AIR bulkhead.

13. Connect the pump vacuum port (inlet) to the EXHAUST bulkhead (Figure 2–5).

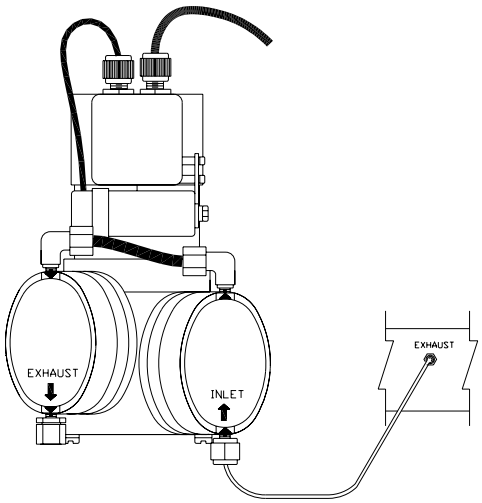

Figure 2–5. Twin-Head Vacuum Pump Installation

14. Connect the pump exhaust to a suitable vent.

CAUTION Ozone is present in the exhaust, therefore, the exhaust should be plumbed to a suitable vent. ▲

Equipment Damage DO NOT connect the pump exhaust port to the EXHAUST bulkhead. This can cause permanent damage to both the cooler and the photomultiplier tube. ▲

15. Connect a suitable recording device to the rear panel connector. For detailed information about connecting to the instrument, refer to:

    "Connecting External Devices" on page 2-8

    "External Device Connection Components" on page 7-7

    "Terminal Block and Cable Kits" on page 9-2

    "Instrument Controls Menu" on page 3-24

    For detailed information about troubleshooting a connection, refer to "Analog Output Testing" on page 7-33.

16. Plug the instrument into an outlet of the appropriate voltage and frequency.

WARNING The Model 42*i* NO_y is supplied with a three-wire grounding cord. Under no circumstances should this grounding system be defeated. ▲

Table 2–1. NO_y Converter Interface Board DC/Data Wiring

Pin	Label	Wire Color
1	+24V	Red
2	GND	Green
3	+5V	Black
4	+RS485	Blue
5	-RS485	Brown

Table 2–2. NO_y Converter Interface Board AC Wiring

Pin	Wire Color
1	Black
2	White
3	Green

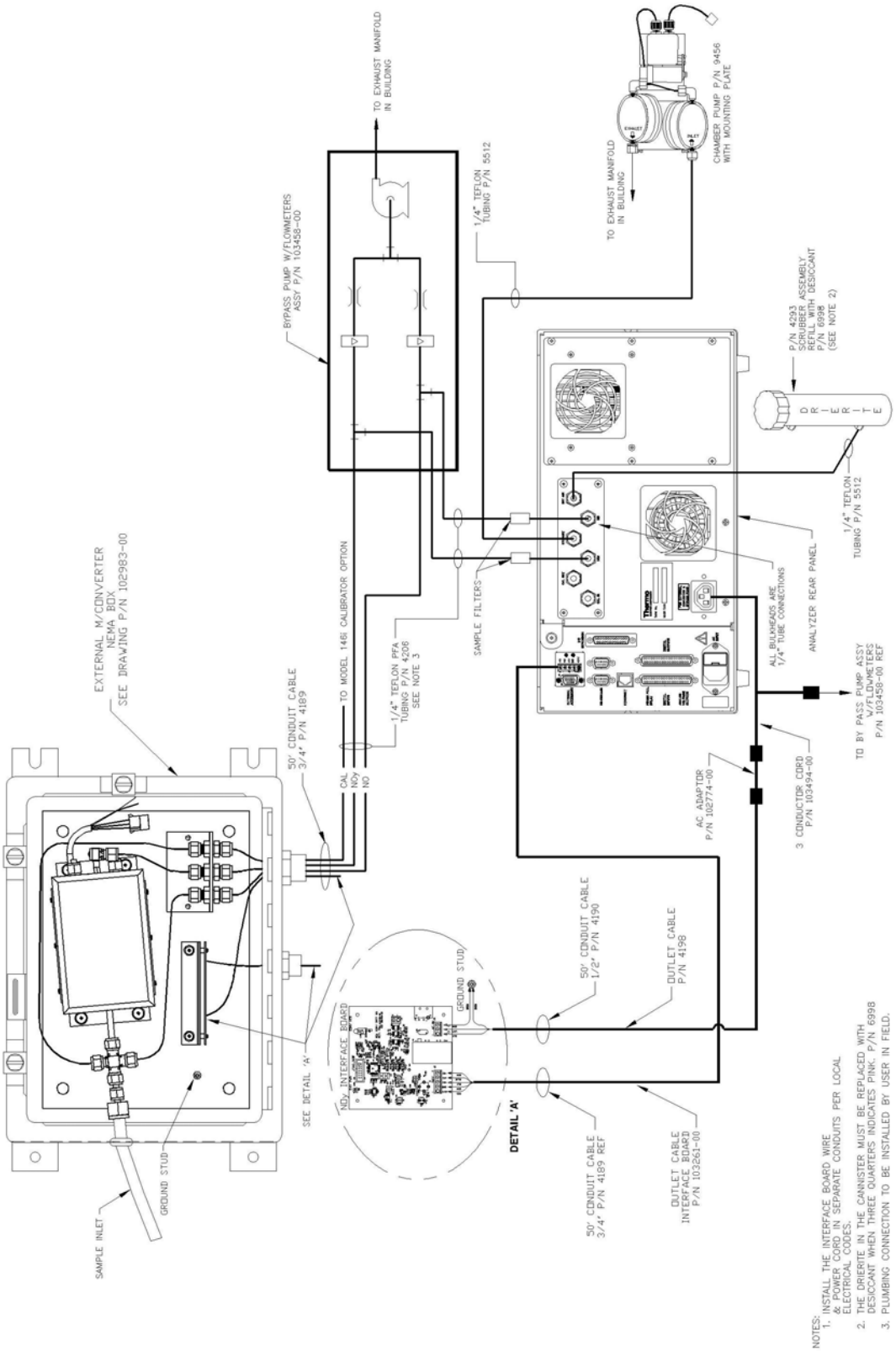

Figure 2–6. Model 42*i* NO_y Typical Installation Diagram

Connecting External Devices

Several components are available for connecting external devices to *i*Series instruments.

These connection options include:

- Individual terminal board PCB assemblies
- Terminal block and cable kits (optional)
- Individual cables (optional)

For detailed information on the optional connection components, refer to the "Optional Equipment" chapter. For associated part numbers, refer to "External Device Connection Components" on page 7-7.

Terminal Board PCB Assemblies

The following terminal board PCB assemblies are available for *i*Series instruments:

- I/O terminal board PCB assembly, 37 pin (standard)
- D/O terminal board PCB assembly, 37 pin (standard)
- 25-pin terminal board PCB assembly, (included with optional I/O Expansion Board)

I/O Terminal Board

Figure 2–7 shows the recommended method for attaching the cable to the terminal board using the included tie-down and spacer. Table 2–3 identifies the connector pins and associated signals.

Note All of the Input/Output (I/O) available in the instrument are not brought out on this terminal board, if more I/O is desired, an alternative means of connection is required. ▲

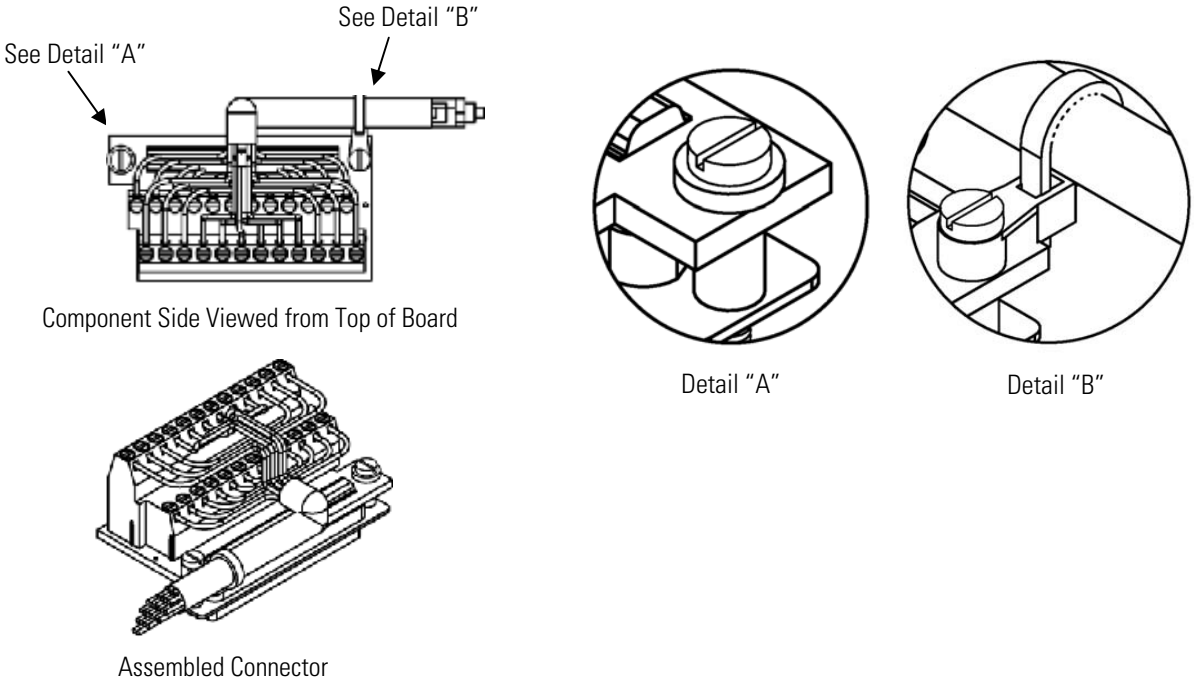

Figure 2–7. I/O Terminal Board Views

Table 2–3. I/O Terminal Board Pin Descriptions

Pin	Signal Description	Pin	Signal Description
1	Analog1	13	Power_Fail_NC
2	Analog ground	14	Power_Fail_COM
3	Analog2	15	Power_Fail_NO
4	Analog ground	16	TTL_Input1
5	Analog3	17	TTL_Input2
6	Analog ground	18	TTL_Input3
7	Analog4	19	TTL_Input4
8	Analog ground	20	Digital ground
9	Analog5	21	TTL_Input5
10	Analog ground	22	TTL_Input6
11	Analog6	23	TTL_Input7
12	Analog ground	24	Digital ground

D/O Terminal Board

Figure 2–8 shows the recommended method for attaching the cable to the digital output (D/O) terminal board using the included tie-down and spacer. Table 2–4 identifies the connector pins and associated signals.

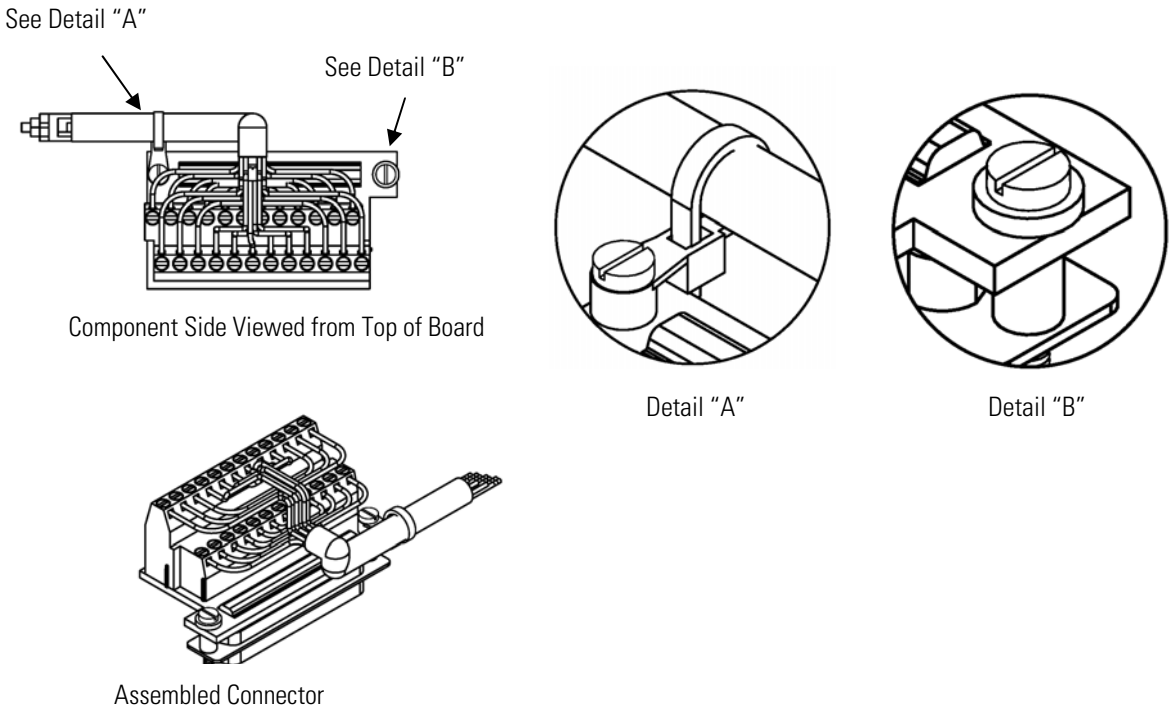

Figure 2–8. D/O Terminal Board Views

Table 2–4. D/O Terminal Board Pin Descriptions

Pin	Signal Description	Pin	Signal Description
1	Relay1_ContactA	13	Relay7_ContactA
2	Relay1_ContactB	14	Relay7_ContactB
3	Relay2_ContactA	15	Relay8_ContactA
4	Relay2_ContactB	16	Relay8_ContactB
5	Relay3_ContactA	17	Relay9_ContactA
6	Relay3_ContactB	18	Relay9_ContactB
7	Relay4_ContactA	19	Relay10_ContactA
8	Relay4_ContactB	20	Relay10_ContactB
9	Relay5_ContactA	21	(not used)
10	Relay5_ContactB	22	+24V
11	Relay6_ContactA	23	(not used)
12	Relay6_ContactB	24	+24V

25-Pin Terminal Board

The 25-pin terminal board is included with the optional I/O Expansion Board.

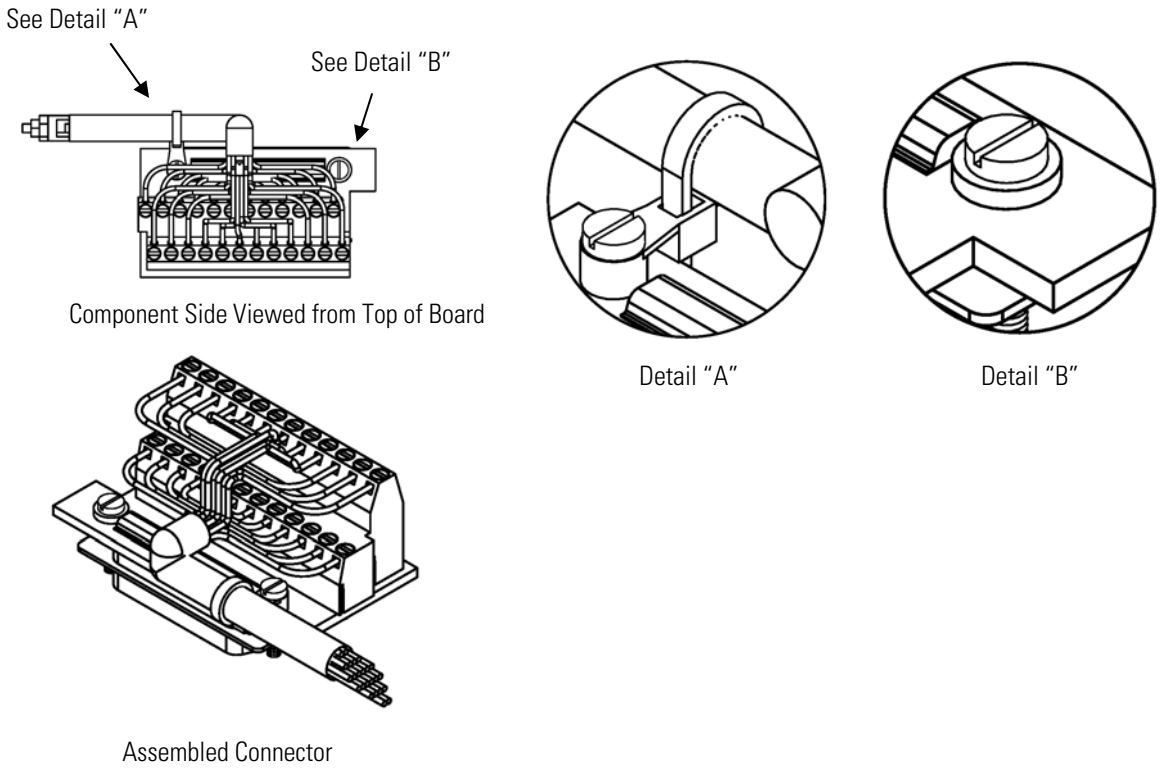

Figure 2–9. 25-Pin Terminal Board Views

Table 2–5. 25-Pin Terminal Board Pin Descriptions

Pin	Signal Description	Pin	Signal Description
1	IOut1	13	Analog_In1
2	Isolated ground	14	Analog_In2
3	IOut2	15	Analog_In3
4	Isolated ground	16	GNDD
5	IOut3	17	Analog_In4
6	Isolated ground	18	Analog_In5
7	IOut4	19	Analog_In6
8	Isolated ground	20	GNDD
9	IOut5	21	Analog_In7
10	Isolated ground	22	Analog_In8
11	IOut6	23	GNDD
12	Isolated ground	24	GNDD

Startup

Use the following procedure when starting the instrument.

1. Turn the power ON.

2. Allow 90 minutes for the instrument to stabilize.

3. Set instrument parameters such as operating ranges and averaging times to appropriate settings. For more information about instrument parameters, see the "Operation" chapter.

4. Before beginning the actual monitoring, perform a multipoint calibration as described in the "Calibration" chapter.

Chapter 3
Operation

This chapter describes the front panel display, front panel pushbuttons, and menu-driven software. For details, see the following topics:

- "Display" on page 3-1
- "Pushbuttons" on page 3-2
- "Software Overview" on page 3-4
- "Range Menu" on page 3-8
- "Averaging Time" on page 3-15
- "Calibration Factors Menu" on page 3-16
- "Calibration Menu" on page 3-19
- "Instrument Controls Menu" on page 3-24
- "Diagnostics Menu" on page 3-54
- "Alarms Menu" on page 3-62
- "Service Menu" on page 3-72
- "Password Menu" on page 3-85

Display

The 320 x 240 graphics liquid-crystal display (LCD) shows the sample concentrations, instrument parameters, instrument controls, help, and error messages. Some menus contain more items than can be displayed at one time. For these menus, use ⬆ and ⬇ to move the cursor up and down to each item.

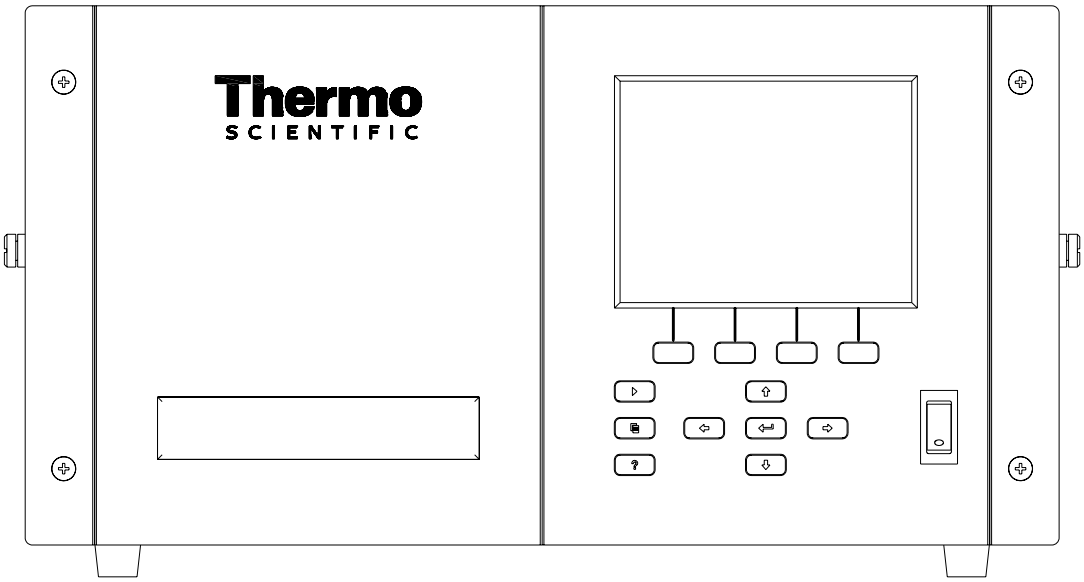

Figure 3–1. Front Panel Display

CAUTION If the LCD panel breaks, do not to let the liquid crystal contact your skin or clothes. If the liquid crystal contacts your skin or clothes, wash it off immediately using soap and water. ▲

Pushbuttons

The Pushbuttons allow the user to traverse the various screens/menus.

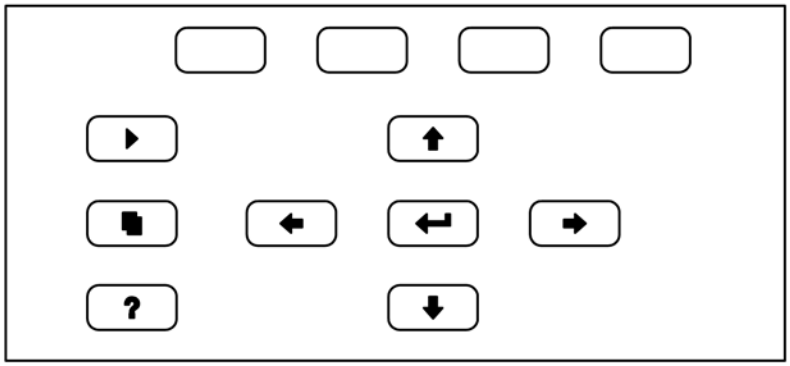

Figure 3–2. Front Panel Pushbuttons

Table 3–1 lists the front panel pushbuttons and their functions.

Table 3–1. Front Panel Pushbuttons

Key Name	Function
= Soft Keys	The (soft keys) are used to provide shortcuts that allow the user to jump to user-selectable menu screens. For more information on processing soft keys, see "Soft Keys" below
= Run	The is used to display the Run screen. The Run screen normally displays the NO, DIF, and NO_y concentrations.
= Menu	The is used to display the Main Menu when in the Run screen, or back up one level in the menu system. For more information about the Main Menu, see "Main Menu" later in this chapter.
? = Help	The ? is context-sensitive, that is, it provides additional information about the screen that is being displayed. Press ? for a brief explanation about the current screen or menu. Help messages are displayed using lower case letters to easily distinguish them from the operating screens. To exit a help screen, press or ? to return to the previous screen, or to return to the Run screen.
= Up, Down = Left, Right	The four arrow pushbuttons (, , , and) move the cursor up, down, left, and right or change values and states in specific screens.
= Enter	The is used to select a menu item, accept/set/save a change, and/or toggle on/off functions.

Soft Keys

The Soft Keys are multi-functional keys that use part of the display to identify their function at any moment. The function of the soft keys allows immediate access to the menu structure and most often used menus and screens. They are located directly underneath the display and as the keys' functions change this is indicated by user-defined labels in the lower part of the display, so that the user knows what the keys are to be used for.

To change a soft key, place the menu cursor ">" on the item of the selected menu or screen you wish to set. Press followed by the selected soft key within 1 second of pressing the right-arrow key. The edit soft key prompt will be displayed for configuration for the new label.

Note Not all menu items may be assigned to soft keys. If a particular menu or screen item cannot be assigned, the key assignment screen will not come up upon entering right-arrow-soft key combinations. All items under the Service menu (including the menu itself) cannot be assigned soft keys. ▲

```
EDIT SOFT KEY PROMPT:
 CURRENTLY:RANGE
           RANGE
     ABCDEFGHIJKLMN  BKSP
     OPQRSTUVWXYZ    PAGE
     0123456789 ./-  SAVE

 RANGE  AVG  DIAGS ALARM
```

Software Overview

The Model 42*i* NO_y utilizes the menu-driven software as illustrated by the flowchart in Figure 3–3. The Power-Up screen, shown at the top of the flowchart, is displayed each time the instrument is turned on. This screen is displayed while the instrument is warming up and performing self-checks. After the warm-up period, the Run screen is automatically displayed. The Run screen is the normal operating screen. It displays the NO, DIF, and NO_y concentrations, depending on operating mode. From the Run screen, the Main Menu can be displayed by pressing [■]. The Main Menu contains a list of submenus. Each submenu contains related instrument settings. This chapter describes each submenu and screen in detail. Refer to the appropriate sections for more information.

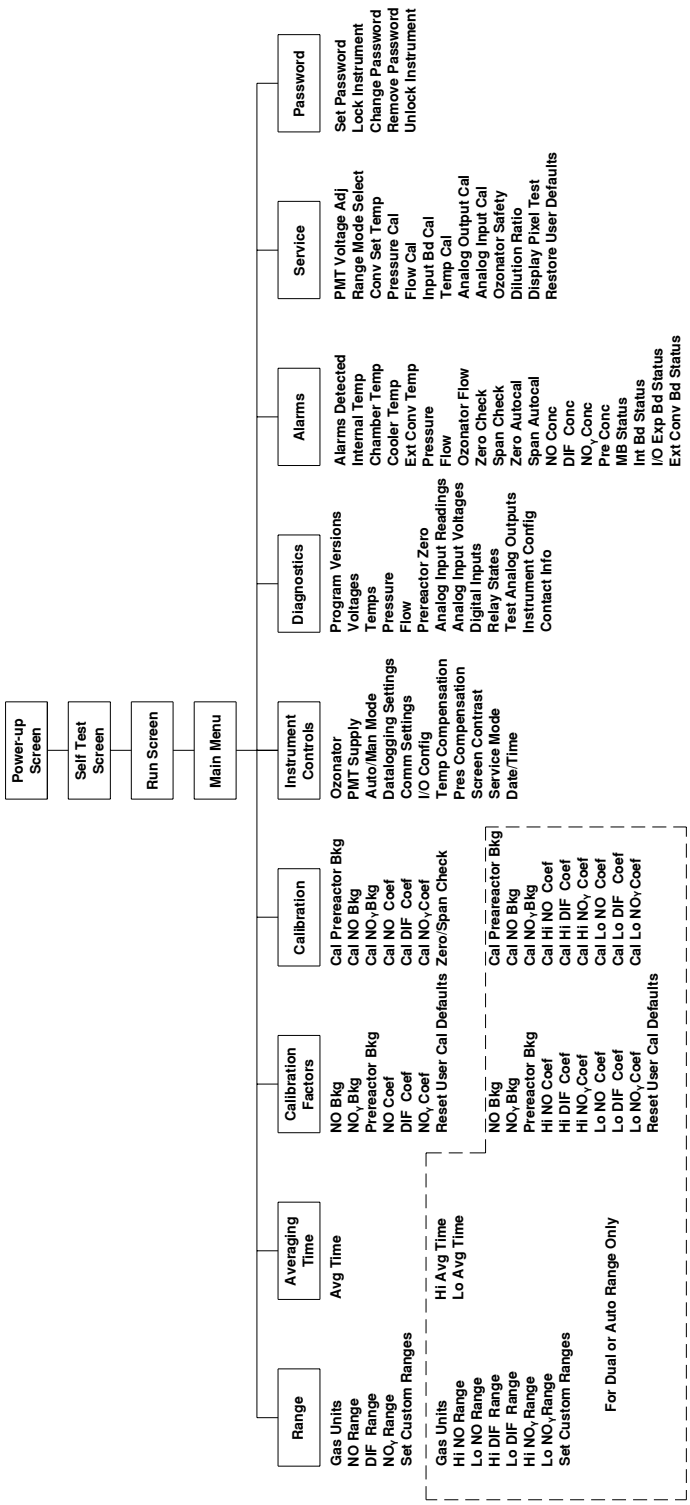

Figure 3–3. Flowchart of Menu-Driven Software

Power-Up Screen

The Power-Up screen is displayed on power up of the Model 42*i* NO_y. The Self-Test is displayed while the internal components are warming up and diagnostic checks are performed.

Run Screen

The Run screen displays the NO, DIF, and NO_y concentrations. The status bar displays optional zero/span solenoid valves, if installed, time, and alarm status. The word "SAMPLE" on the bottom left of the display indicates the analyzer has the span/zero valve option and is in "SAMPLE" mode. Other modes appear in the same area of the display as "ZERO" or "SPAN". For more information about the optional solenoid valves, see Chapter 9, "Optional Equipment".

When operating in dual or auto range mode two sets of coefficients are used to calculate the NO-DIF-NO_y "High" and "Low" concentrations. Also, two averaging times are used—one for each range. The title bar indicates which range concentrations are displayed. The words "LOW RANGE CONCENTRATION" on the top of the display indicates that the low concentration is displayed. In dual range mode, pressing the ↑ and ↓ arrows will toggle between high and low concentrations. The example below shows the Run screen in single range mode.

```
      CONCENTRATION
NO            62.7 PPB
DIF           25.5 PPB
NOy           88.2 PPB
 SAMPLE     12:34    ALARM
 RANGE  AVG  DIAGS ALARM
```

Main Menu

The Main Menu contains a number of submenus. Instrument parameters and settings can be read and modified within the submenus according to their function. The concentration appears above the main menu and submenus in every screen. The Service menu is visible only when the instrument is in service mode. For more information on the service mode, see "Service Mode" later in this chapter.

- Use [↑] and [↓] to move the cursor up and down.
- Press [↵] to select a choice.
- Press [■] to return to the Main Menu or [▶] to return to the Run screen.

```
      CONCENTRATION
 NO            62.7 PPB
 DIF           25.5 PPB
 NOy           88.2 PPB
 SAMPLE     12:34    ALARM
MAIN MENU:
>RANGE
 AVERAGING TIME
 CALIBRATION FACTORS
 CALIBRATION
 INSTRUMENT CONTROLS
 DIAGNOSTICS
 ALARMS                  ↓
 RANGE  AVG  DIAGS ALARM
```

```
SERVICE
PASSWORD
```

Range Menu

The Range menu allows the operator to select the gas units, NO-DIF-NO_y ranges, and to set the custom ranges. The screens below show the range menu in single range mode and dual/auto range modes. The only difference between the screens are the words "HI" and "LO" to indicate which range is displayed. For more information about the single, dual and auto range modes, see "Single Range Mode", "Dual Range Mode", and "Auto Range Mode" below.

- In the Main Menu, choose **Range**

```
RANGE:
>GAS UNITS              PPB
 NO RANGE                50
 DIF RANGE               50
 NOy RANGE               50
 SET CUSTOM RANGES

 RANGE  AVG  DIAGS ALARM
```

```
RANGE:
>GAS UNITS              PPB
 HI NO RANGE            100
 LO NO RANGE             50
 HI DIF RANGE           100
 LO DIF RANGE            50
 HI NOy RANGE           100
 LO NOy RANGE            50↓

 RANGE  AVG  DIAGS ALARM
```

```
SET CUSTOM RANGES
```

Single Range Mode

In the single range mode, the NO, DIF, and NO_y channels each have one range, one averaging time, and one span coefficient.

By default, the three analog outputs are arranged on the rear panel connector as shown in Figure 3–4. See Table 3–2 for channels and pin connections. Single range mode may be selected from the "Range Mode Select" on page 3-73.

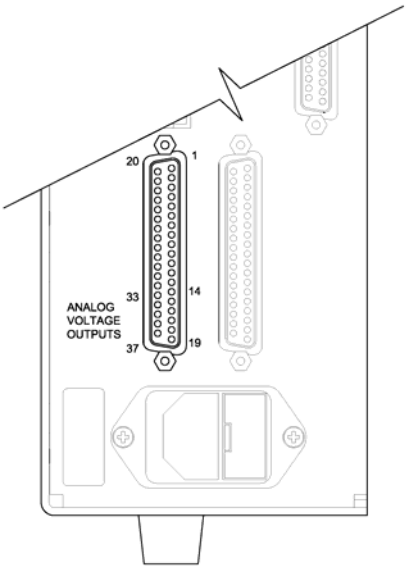

Figure 3–4. Pin-Out of Rear Panel Connector in Single Range Mode

Table 3–2. Default Analog Outputs in Single Range Mode

Channel	Connector Pin	I/O Terminal Pin	Description
1	14	1	NO Analog Output
2	33	3	DIF Analog Output
3	15	5	NO_y Analog Output
4	34	7	None
5	17	9	None
6	36	11	None
Ground	16, 18, 19, 35, 37	2, 4, 6, 8, 10, 12	Signal Ground

Note All channels are user definable. If any customization has been made to the analog output configuration, the default selections my not apply. ▲

Dual Range Mode

In the dual range mode, there are two independent analog outputs. These are labeled simply as the “High Range” and the “Low Range”. Each channel has its own analog output range, averaging time, and span coefficient.

This enables the sample concentration reading to be sent to the analog outputs at two different ranges. For example, the low NO analog output can be set to output concentrations from 0 to 50 ppb and the high NO analog output set to output concentrations from 0 to 100 ppb.

In addition to each channel having two ranges, each channel has two span coefficients. There are two span coefficients so that each range can be calibrated separately. This is necessary if the two ranges are not close to one another. For example, the low NO range is set to 0–50 ppb and the high NO range is set to 0–200 ppb.

By default, in the dual range mode, the analog outputs are arranged on the rear panel connector as shown in Figure 3–5. See Table 3–3 for channels and pin connections. Dual range mode may be selected from the "Range Mode Select" on page 3-73.

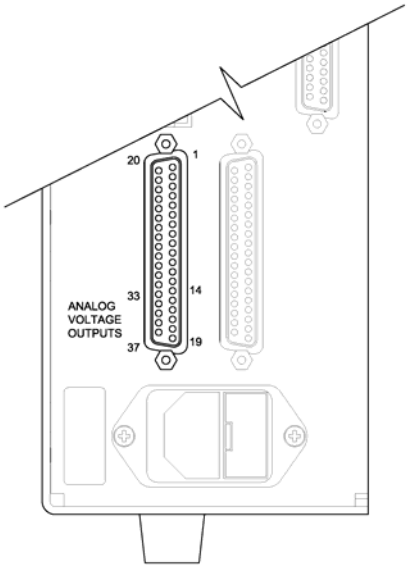

Figure 3–5. Pin-Out of Rear Panel Connector in Dual Range Mode

Table 3–3. Default Analog Outputs in Dual Range Mode

Channel	Connector Pin	I/O Terminal Pin	Description
1	14	1	NO High Range
2	33	3	NO Low Range
3	15	5	DIF High Range
4	34	7	DIF Low Range
5	17	9	NO_y High Range
6	36	11	NO_y Low Range
Ground	16, 18, 19, 35, 37	2, 4, 6, 8, 10, 12	Signal Ground

Note All channels are user definable. If any customization has been made to the analog output configuration, the default selections my not apply. ▲

Auto Range Mode

The auto range mode switches the NO, DIF, and NO_y analog outputs between high and low ranges, depending on the NO_y concentration level. The high and low ranges are defined in the Range menu.

For example, suppose the low range is set to 50 ppb and the high range is set to 100 ppb (Figure 3–6). Sample concentrations below 50 ppb are presented to the low ranges analog outputs and sample concentrations above 50 ppb are presented to the high ranges analog outputs. When the low range is active, the status output is at 0 volts. When the high range is active, the status output is at half of full-scale.

When the high ranges are active, the NO concentration must drop to 85% of the low NO range for the low ranges to become active.

In addition to each channel having two ranges, each channel has two span coefficients. There are two span coefficients so that each range can be calibrated separately. This is necessary if the two ranges are not close to one another. For example, the low NO range is set to 0–50 ppb and the high NO range is set to 0–200 ppb.

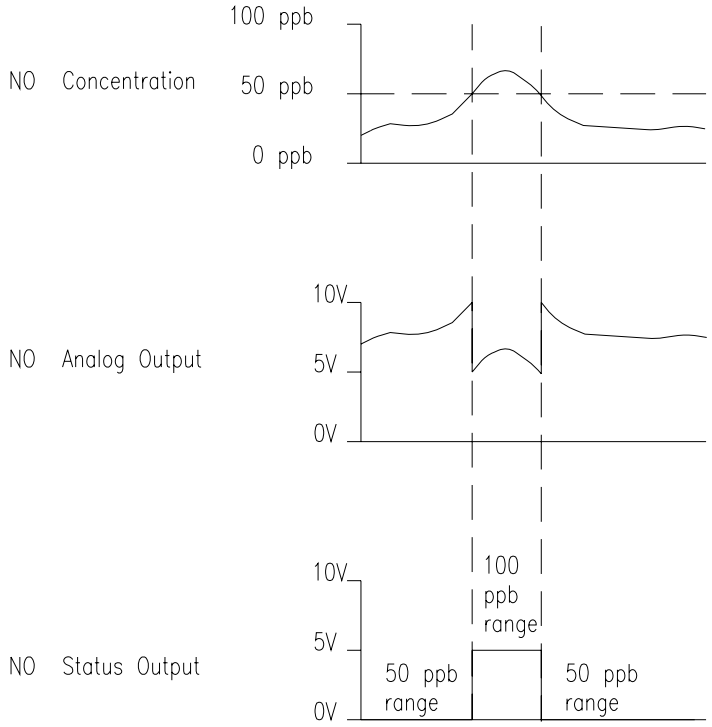

Figure 3–6. Analog Output in Auto Range Mode

By default, in the auto range mode, the analog outputs are arranged on the rear panel connector as shown in Figure 3–7. See Table 3–4 for channels and pin connections. Auto range mode may be selected from the "Range Mode Select" on page 3-73.

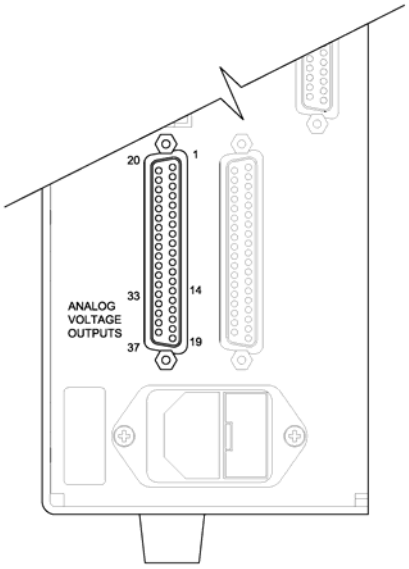

Figure 3–7. Pin-Out of Rear Connector in Auto Range Mode

Table 3–4. Default Analog Outputs in Auto Range Mode

Channel	Connector Pin	I/O Terminal Pin	Description
1	14	1	NO Analog Output
2	33	3	DIF Analog Output
3	15	5	NO_y Analog Output
4	34	7	Range Status: half-scale = high range zero scale = low range
5	17	9	None
6	36	11	None
Ground	16, 18, 19, 35, 37	2, 4, 6, 8, 10, 12	Signal Ground

Note All channels are user definable. If any customization has been made to the analog output configuration, the default selections my not apply. ▲

Gas Units

The Gas Units screen defines how the NO, DIF, and NO_y concentration readings are expressed. Gas units of parts per billion (ppb) and micrograms per cubic meter (µg/m^3) are available. The µg/m^3 gas concentration mode is calculated using a standard pressure of 760 mmHg and a standard temperature of 20 °C.

When switching from ppb to µg/m^3, the analog ranges all default to the highest range in that mode. For example, when switching from µg/m^3 to ppb, all the ranges default to 200 ppb. Therefore, whenever you change units, you should also check the range settings.

- In the Main Menu, choose Range > **Gas Units**.

Note If the units change from ppb to µg/m^3 or vice versa, the instrument should be re-calibrated, particularly if the user's standard temperature is different from 20 °C. A display warning will appear that ranges will be defaulted and calibration parameters reset. ▲

```
GAS UNITS:
 CURRENTLY:          PPB
    SET TO:        UG/M3 ?
AND SET RANGES AND CAL TO
DEFAULT SETTINGS
 ⬆⬇ CHANGE VALUE    ↵ SAVE

 RANGE  AVG  DIAGS ALARM
```

NO, DIF, and NO_y Ranges

The NO, DIF, and NO_y Ranges screen defines the concentration range of the analog outputs. For example, a DIF range of 0–50 ppb defaults the DIF analog output to concentrations between 0 and 50 ppb.

The display shows the current NO, DIF, or NO_y range. The next line of the display is used to change the range. The range screen is similar for the single, dual, and auto range modes. The only difference between the screens are the words "High" or "Low" displayed to indicate which range is displayed. The example below shows the NO range screen in single mode. For more information about the dual and auto range modes, see "Single Range Mode", "Dual Range Mode", and "Auto Range Mode" earlier in this chapter.

Table 3–5 lists the available operating ranges.

- In the Main Menu, choose Range > **NO, DIF, or NOy Range**.

```
NO RANGE:
 CURRENTLY:              50
    SET TO:             100 ?

          ↑↓ CHANGE VALUE
           ↵ SAVE VALUE

 RANGE  AVG  DIAGS ALARM
```

Table 3–5. Available Operating Ranges

ppb	µgm³
5	10
10	20
20	50
50	100
100	200
200	500
C1	C1
C2	C2
C3	C3

C1, C2, and C3 are custom ranges. For more information about custom ranges, see "Set Custom Ranges" below.

Set Custom Ranges

The Set Custom Ranges menu lists three custom ranges: C1, C2, and C3. Custom ranges are user-defined ranges. In the ppb mode, any value between 5 and 200 ppb can be specified as a range. In the µg/m^3 mode, any value between 10 and 500 µg/m^3 can be specified as a range.

- In the Main Menu, choose Range > **Set Custom Ranges**.

```
CUSTOM RANGES:
>CUSTOM RANGE 1        55.6
 CUSTOM RANGE 2        75.0
 CUSTOM RANGE 3       125.0

 RANGE  AVG  DIAGS ALARM
```

Custom Ranges

The Custom Ranges screen is used to define the custom ranges.

The display shows the current custom range. The next line of the display is used to set the range. To use the custom full-scale range, be sure to select it (Custom range 1, 2, or 3) in the NO, DIF, or NO_y Ranges screen. For more information about selecting ranges, see "NO, DIF, and NOy Ranges" above.

- In the Main Menu, choose Range > Set Custom Ranges > **Custom range 1, 2,** or **3**.

```
CUSTOM RANGE 1:
 CURRENTLY:          55.6
    SET TO:      000055.7 ?

          ↔ MOVE CURSOR
 ↑↓ CHANGE VALUE    ↵ SAVE

 RANGE  AVG  DIAGS ALARM
```

Averaging Time

The Averaging Time defines a time period (10 to 300 seconds) over which NO, DIF, and NO_y measurements are taken. The average concentration of the NO, DIF, and NO_y readings are calculated for that time period. The front panel display and analog outputs are updated every 10 seconds for averaging times between 10 and 300 seconds. An averaging time of 10 seconds, for example, means that the average concentration of the last 10 seconds will be output at each update. An averaging time of 300 seconds means that the moving average concentration of the last 300 seconds will be output at each update. Therefore, the lower the averaging time the faster the front panel display and analog outputs respond to concentration changes. Longer averaging times are typically used to smooth output data.

The Averaging Time screen for the single range mode is shown below. In the dual and auto range modes, an Averaging Time Menu is displayed before the averaging time screens. This additional menu is needed because

the dual and auto range modes have two averaging times (high and low). The Averaging Time screen functions the same way in the single, dual, and auto range modes. The following averaging times are available: 10, 20, 30, 60, 90, 120, 180, 240, and 300 seconds. Additional averaging times are available in NO and NO_y mode, see "Auto/Manual Mode" later in this chapter.

- In the Main Menu, choose **Averaging Time**.

```
AVERAGING TIME:
 CURRENTLY:        30 SEC
    SET TO:        10 SEC ?

            ↑↓ CHANGE VALUE
             ↵ SAVE VALUE

 RANGE  AVG  DIAGS ALARM
```

Calibration Factors Menu

Calibration factors are used to correct the NO, DIF, and NO_y concentration readings that the instrument generates using its own internal calibration data. The Calibration Factors menu displays the calibration factors. The screens below show the calibration factors menu in single mode and dual/auto range modes. The only difference between the screens are the words "HI" and "LO" to indicate which range is displayed.

Normally, the instrument is calibrated automatically using the Calibration menu described in "Calibration Menu" later in this chapter. However, the instrument can also be calibrated manually using the Calibration Factors menu.

To manually calibrate the instrument, see "NO, NOy, and Prereactor Backgrounds" and "NO, DIF, and NOy Coefficients" below for more information.

- In the Main Menu, choose **Calibration Factors**.

```
CALIBRATION FACTORS:
>NO BKG                    0.0
 NOy BKG                   0.0
 PREREACTOR BKG            0.0
 NO COEF                1.000
 DIF COEF               1.000
 NOy COEF               1.000
 RESET USER CAL DEFAULTS

 RANGE  AVG  DIAGS ALARM
```

```
CALIBRATION FACTORS:
>NO BKG                    0.0
 NOy BKG                   0.0
 PREREACTOR BKG            0.0
 HI NO COEF             1.000
 HI DIF COEF            1.000
 HI NOy COEF            1.000
 LO NO COEF             1.000↓

 RANGE  AVG  DIAGS ALARM
```

```
LO DIF COEF            1.000
LO NOy COEF            1.000
RESET USER CAL DEFAULTS
```

NO, NO_y, and Prereactor Backgrounds

The NO, NO_y and Prereactor background corrections are determined during zero calibration. The NO background is the amount of signal read by the analyzer in the NO channel while sampling zero air. The NO_y background is the amount of signal read by the analyzer in the NO_y channel while sampling zero air. The Prereactor background is the amount of signal read by the analyzer when the sample is routed through the prereactor. The background signal is the combination of electrical offsets, PMT dark currents, and trace substances undergoing chemiluminescence. Before the analyzer sets the NO, NO_y and Prereactor readings to zero, it stores these values as the NO, NO_y, and Prereactor background corrections, respectively. The DIF background correction is determined from the NO and NO_y background corrections and is not displayed. The background corrections are typically below 1.5 ppb.

The NO, NO_y and Prereactor Background screens are used to perform a manual zero calibration of the instrument. Before performing a zero calibration, allow the analyzer to sample zero air until stable readings are obtained. The NO channel should be calibrated first. The NO, NO_y, and Prereactor Background screens operate the same way. Therefore, the following description of the NO background applies to the NO_y and Prereactor background screens as well. The first line of the display shows the current NO reading. The second line of the display shows the NO background correction that is stored in memory. The NO background correction is a value, expressed in the current gas units, that is subtracted from the NO reading to produce the NO reading that is displayed.

In the example below, the analyzer is displayed 0.09 ppb of NO while sampling zero air. A background correction is 0.0 ppb means that 0 ppb is being subtracted from the NO concentration being displayed. Therefore, the background correction must be increased to 0.09 ppb in order for the

NO reading to be at 0 ppb, i.e., a NO reading of 0.09 ppb minus a NO background reading of 0.09 ppb gives the corrected NO reading of 0 ppb.

To set the NO reading in the example below to zero, use [↑] to increment the NO background correction to 0.09 ppb. As the NO background correction is increased, the NO concentration is decreased. Note that at this point, pressing [↑] and [↓] however, has no affect on the analog outputs or the stored NO background correction of 0.0 ppb. A question mark following both the NO reading and the NO background correction indicates that these are proposed changes as opposed to implemented changes. To escape this screen without saving any changes, press [■] to return to the Calibration Factors menu or [▶] to return to the Run screen. Press [↵] to actually set the NO reading to 0 ppb and store the new background correction of 0.09 ppb. Then the question mark prompt beside the NO reading disappears.

- In the Main Menu, choose Calibration Factors > **NO, NOy, or Prereactor Bkg**.

```
NO BACKGROUND:
        NO:          0.09
 SET BKG TO:         0.00

            ↑↓ INC/DEC
             ↵ SAVE VALUE

 RANGE  AVG  DIAGS ALARM
```

NO, DIF, and NO_y Coefficients

The NO, DIF, and NO_y span coefficient are usually calculated by the instrument processor during calibration. The span coefficients are used to correct the NO, DIF, and NO_y readings. The NO and NO_y span coefficients normally has a value near 1.000. The DIF span coefficient normally has a value between 0.95 and 1.050.

The NO, DIF, and NO_y Coefficient screens allow the NO, DIF, and NO_y span coefficients to be manually changed while sampling span gas of known concentration. The NO, DIF, and NO_y Coefficient screens operate the same way. Therefore, the following description of the NO coefficient screen applies to the DIF, and NO_y coefficient screens as well.

The display shows the current NO concentration reading. The next line of the display shows the NO span coefficient that is stored in memory and is being used to correct the NO concentration. Notice that as the span coefficient value is changed, the current NO concentration reading on the above line also changes. However, no real changes are made to the value

stored in memory until [↵] is pressed. Only proposed changes, as indicated by a question mark prompt, are displayed until [↵] is pressed.

In dual or auto range modes, "HIGH" or "LOW" is displayed to indicate the calibration of the high or low coefficient. The example below shows the coefficient screen in dual/auto range mode.

Note The concentration value will show "ERROR" if the measured concentration is not a valid span value (either higher than the selected range, or 0 or lower). ▲

- In the Main Menu, choose Calibration Factors > **NO, DIF, or NOy Coef**.

```
NO COEFFICIENT:
          NO:          51.4
 SET COEF TO:         1.000

              ↑↓ INC/DEC
               ↵ SAVE VALUE

 RANGE  AVG  DIAGS ALARM
```

Reset User Calibration Default

The Reset User Calibration Default screen allows the user to reset the calibration configuration values to factory defaults.

- In the Main Menu, choose Service > Calibration Factors > **Reset User Cal Defaults**.

```
RESTORE DEFAULT CAL:

                ↵ RESTORE


 RANGE  AVG  DIAGS ALARM
```

```
RESTORE DEFAULT CAL:

                ↵ RESTORE
ARE YOU SURE YOU WANT TO?
PRESS → TO CONFIRM RESTORE

 RANGE  AVG  DIAGS ALARM
```

Calibration Menu

The Calibration menu is used to calibrate the analyzer, including zero backgrounds, the NO, DIF, and NO_y coefficients, and the calibration pressure. The screens below show the calibration menu in single mode and

dual/auto range modes. The zero/span check is visible only if the zero/span option is installed in single range mode.

The calibration procedure is the same in dual, auto, or single range, however, there are two sets of gas coefficients in dual or auto range (i.e. low and high coefficients). This enables each range to be calibrated separately. When calibrating the instrument in dual or auto range, be sure to use a low span gas to calibrate the low range and a high span gas to calibrate the high range.

- In the Main Menu, choose **Calibration**.

```
CALIBRATION:
>CAL PREREACTOR ZERO
 CAL NO BACKGROUND
 CAL NOy BACKGROUND
 CAL NO COEFFICIENT
 CAL DIF COEFFICIENT
 CAL NOy COEFFICIENT
 ZERO/SPAN CHECK

 RANGE  AVG  DIAGS ALARM
```

```
CALIBRATION:
>CAL PREREACTOR ZERO
 CAL NO BACKGROUND
 CAL NOy BACKGROUND
 CAL HI NO COEFFICIENT
 CAL HI DIF COEFFICIENT
 CAL HI NOy COEFFICIENT
 CAL LO NO COEFFICIENT   ↓

 RANGE  AVG  DIAGS ALARM
```

```
CAL LO DIF COEFFICIENT
CAL LO NOy COEFFICIENT
```

Calibrate NO, NO_y and Prereactor Backgrounds

The Calibrate NO Background screen is used to adjust the background, or perform a “zero calibration”. Be sure the analyzer samples zero air until the readings stabilize. The NO, NO_y, and Prereactor Background screens operate the same way. Therefore, the following description of the NO background applies to the NO_y and Prereactor background screens as well. The first line of the display shows the current NO reading.

It is important to note the averaging time when calibrating. The longer the averaging time, the more accurate the calibration will be. To be most accurate, use the 300-second averaging time. For more information about calibration, see Chapter 4, “Calibration”.

- In the Main Menu, choose Calibration > **Cal Prereactor Zero, Cal NO Background,** or **Cal NOy Background**.

```
NO BACKGROUND:
        NO:            0.09
 CURRENTLY:            0.00 ?

        ↵ SET NO TO ZERO

 RANGE  AVG  DIAGS ALARM
```

Calibrate NO, DIF or NO_y Coefficients

The Calibrate NO Coefficient screen is used to adjust the NO span concentration while sampling span gas of known concentration. All calibration screens operate the same way. Therefore, the following description of the NO calibration screen applies to the DIF and NO_y calibration screens as well.

The display shows the current NO concentration reading and the current NO range. The next line of the display is where the NO calibration gas concentration is entered.

It is important to note the averaging time when calibrating. The longer the averaging time, the more accurate the calibration will be. To be most accurate, use the 300-second averaging time. For more information about calibration, see Chapter 4, "Calibration".

- In the Main Menu, choose Calibration > **Cal NO, DIF or NOy Coefficient**.

```
CALIBRATE NO:
        NO:            25.5
 SPAN CONC:      0001.000 ?

          ↔ MOVE CURSOR
 ↑↓ CHANGE VALUE   ↵ SAVE

 RANGE  AVG  DIAGS ALARM
```

Zero/Span Check

The Zero/Span Check menu is available with the zero/span valve option when in NO or NO_y measurement modes. It is used to program the instrument to perform fully automated zero and span check or adjustments. Total Duration Hour is the sum of zero, span, and purge duration minutes. Zero and Span Calibration Reset are toggle items that change between yes or no when selected, and displayed if auto calibration is installed.

- In the Main Menu, choose Calibration > **Zero/Span Check**.

```
ZERO/SPAN CHECK:
>NEXT TIME 01Jan05 12:00
 PERIOD HR              24
 TOTAL DURATION HR     2.5
 ZERO DURATION MIN      30
 SPAN DURATION MIN      30
 PURGE DURATION MIN     30
 ZERO/SPAN AVG SEC      60 ↓

 RANGE  AVG  DIAGS ALARM

 ZERO CAL RESET        OFF
 SPAN CAL RESET        OFF
 ZERO/SPAN RATIO         1
```

Next Time The Next Time screen is used to view and set the next zero/span check date and time. Once the initial zero/span check is performed, the date and time of the next zero/span check is calculated and displayed.

- In the Main Menu, choose Calibration > Zero/Span Check > **Next Time**.

```
NEXT DATE AND TIME:
19 MAR 2005  12:34
PRESS ← TO EDIT

 RANGE  AVG  DIAGS ALARM
```

```
NEXT DATE AND TIME:
 19 MAR 2005  12:34:56

 SETTING: DAYS
            → SET MONTHS
           ↑↓ CHANGE VALUE
            ↵ SAVE VALUE
 RANGE  AVG  DIAGS ALARM
```

Period Hours The Zero/Span Period Hours screen defines the period or interval between zero/span checks. Periods between 0 and 999 hours are acceptable. To turn the zero/span check off, set the period to 0.

- In the Main Menu, choose Calibration > Zero/Span Check > **Period Hours**.

```
ZERO/SPAN PERIOD:
 CURRENTLY:      024 HRS
    SET TO:      023 HRS ?

           ←→ MOVE CURSOR
 ↑↓ CHANGE VALUE    ↵ SAVE

 RANGE  AVG  DIAGS ALARM
```

Zero/Span/Purge Duration Minutes

The Zero Duration Minutes screen defines how long zero air is sampled by the instrument. The span and purge duration screens look and function the same way as the zero duration screen, and are used to set how long the span gas and sample gas are sampled by the instrument. Durations between 0 and 60 minutes are acceptable. Each time a zero/span check occurs the zero check is done first, followed by the span check. To perform just a zero check, set the span and purge duration screen to 0 (off). The same applies to perform just a span or purge check.

- In the Main Menu, choose Calibration > Zero/Span Check > **Zero, Span** or **Purge Duration Min**.

```
ZERO DURATION:
 CURRENTLY:        30 MIN
    SET TO:        31 MIN ?

          ↔ MOVE CURSOR
 ↑↓ CHANGE VALUE   ↵ SAVE

 RANGE  AVG  DIAGS ALARM
```

Zero/Span Averaging Time

The Zero/Span Averaging Time screen allows the user to adjust the zero/span averaging time. The zero/span averaging time is used by the analyzer only when performing an automatic zero or span check. The analyzer's averaging time is used for all other functions. The following averaging times are available: 1, 2, 5, 10, 20, 30, 60, 90, 120, 180, 240, and 300 seconds.

- In the Main Menu, choose Calibration > Zero/Span Check > **Zero/Span Avg Sec**.

```
ZERO/SPAN AVERAGING TIME:
 CURRENTLY:        60 SEC
    SET TO:        90 SEC ?

          ↑↓ CHANGE VALUE
           ↵ SAVE VALUE

 RANGE  AVG  DIAGS ALARM
```

Zero/Span Ratio

The Zero/Span Ratio screen is used to adjust the ratio of zeros to spans. For example, if this value is set to 1, a span check will follow every zero check. If this value is set to 3, there will be two zero checks between each zero/span check. This value may be set from 1 to 10, with 1 as default.

- In the Main Menu, choose Calibration > Zero/Span Check > **Zero/Span Ratio**.

```
ZERO/SPAN RATIO:
 CURRENTLY:          1:1
    SET TO:          2:1 ?

          ↑↓ CHANGE VALUE
           ↵ SAVE VALUE

 RANGE  AVG  DIAGS ALARM
```

Instrument Controls Menu

The Instrument Controls menu contains a number of items. The software controls listed in this menu enable control of the listed instrument functions.

- In the Main Menu, choose **Instrument Controls**.

```
INSTRUMENT CONTROLS:
>OZONATOR
 PMT SUPPLY
 AUTO/MANUAL MODE
 DATALOGGING SETTINGS
 COMMUNICATION SETTINGS
 I/O CONFIGURATION
 TEMPERATURE COMPENSATION↓

 RANGE  AVG  DIAGS ALARM
```

```
PRESSURE COMPENSATION
SCREEN CONTRAST
SERVICE MODE
DATE/TIME
```

Ozonator

The Ozonator screen is used to turn the internal ozonator on or off. The display shows the status of the control line that turns the ozonator on or off. The next line of the display shows the user-specified ozonator setting. Under most conditions, the control line status and ozonator set status are the same. However, as a safety precaution, the microprocessor can override the user-specified ozonator setting. This occurs only if the ozonator flow

doesn't indicate any flow or if the DIF converter temperature is below the minimum alarm limit. In this case, an alarm is activated and the ozonator is turned off. This is done to prevent the ozonator from overheating, which will result in permanent damage to the ozonator, or if the converter temperature drops below the minimum limit, which reduces the effectiveness of the ozone destruct.

It is possible, however, to override the ozonator shut-off due to converter temperature being out of range, by setting the ozonator safety "OFF" in the "Service Mode".

Note The ozonator must be "ON" to obtain NO, DIF, and NO_y readings. As an additional safety precaution, a lit LED mounted on the measurement interface board indicates that the ozonator is on. ▲

- In the Main Menu, choose Instrument Controls > **Ozonator**.

```
OZONATOR:
 CURRENTLY:            OFF
    SET TO:             ON ?

            ↵ TOGGLE VALUE

 RANGE  AVG  DIAGS ALARM
```

PMT Supply

The PMT Supply screen is used to turn the PMT power supply on or off. This is useful in a troubleshooting situation.

- In the Main Menu, choose Instrument Controls > **PMT Supply**.

```
PMT SUPPLY:
 CURRENTLY:            OFF
    SET TO:             ON ?

            ↵ TOGGLE VALUE

 RANGE  AVG  DIAGS ALARM
```

Auto/Manual Mode

The Auto/Manual Mode screen allows selection of the automatic mode (NO/NO_y), NO mode (manual NO), NO_y mode (manual NO_y) or prereactor mode (manual prereact). The auto cycle mode switches the

mode solenoid valve automatically on a 10 second cycle so that NO, DIF, and NO_y concentrations are determined. The manual NO mode puts the mode solenoid valve into the open position so that the sample gas bypasses the external converter and alternates between NO and prereactor measurements. Therefore, only the NO concentration is determined. The manual NO_y mode puts the mode solenoid valve into the closed position so that the sample gas passes through the external converter and alternates between NO_y and prereactor measurements. Therefore, only the NO_y concentration is determined.

- In the Main Menu, choose Instrument Controls > **Auto/Manual Mode**.

```
MODE:
 CURRENTLY:     MANUAL NO
    SET TO:        NO/NOy ?

          ↑↓ CHANGE VALUE
           ↵ SAVE VALUE

 RANGE  AVG  DIAGS ALARM
```

Datalogging Settings

The Datalogging Settings menu deals with datalogging.

- In the Main Menu, choose Instrument Controls > **Datalogging Settings**.

```
DATALOGGING SETTINGS:
>SELECT SREC/LREC     SREC
 VIEW LOGGED DATA
 ERASE LOG
 SELECT CONTENT
 COMMIT CONTENT
 RESET TO DEFAULT CONTENT
 CONFIGURE DATALOGGING

 RANGE  AVG  DIAGS ALARM
```

Select SREC/LREC

The Select SREC/LREC is used to select short record or long record format for other operations in this menu.

- In the Main Menu, choose Instrument Controls > Datalogging Settings > **Select SREC/LREC**.

```
SELECT LOG TYPE:
 CURRENTLY:          SREC
    SET TO:          LREC ?

          ↵ TOGGLE VALUE

 RANGE  AVG  DIAGS ALARM
```

View Logged Data

The View Logged Data screen is used to select the start point to view the logged data by number of records or date and time.

- In the Main Menu, choose Instrument Controls > Datalogging Settings > Select SREC or LREC > **View Logged Data**.

```
SELECT START POINT BY:
    SET TO: # OF RECS

  ↑↓ CHANGE     ↵ ACCEPT
 RANGE  AVG  DIAGS ALARM
```

Number of Records

The Number of Records screen is used to select the starting point to display the number of records back to view.

```
SET # BACK FROM CURRENT:
                  00000001
TOTAL LRECS:            20

          ←→ MOVE CURSOR
 ↑↓ CHANGE VALUE    ↵ SAVE

 RANGE  AVG  DIAGS ALARM
```

The Record Display screen (read only) displays the selected records.

```
time     date    flags
10:01 06/20/05 FC0088900
10:02 06/20/05 FC0088900
10:03 06/20/05 FC0088900
10:04 06/20/05 FC0088900
 ⬆⬇ PGUP/DN   ⬅➡ PAN L/R

RANGE  AVG  DIAGS ALARM
```

Date and Time

The Date and Time screen is used to set a start date and time for which to view logged data. For example, if “20 JUN 2005 10:00” is entered, then the first logged data record that is displayed is the first record after this time. If set to one minute logging, this would be at “20 JUN 2005 10:01”.

```
DATE AND TIME:
 20 JUN 2005  10:00
 ⬆⬇ CHG   DAYS
 ➡ SET CURSOR TO MONTHS
 ↵ ACCEPT AS SHOWN

RANGE  AVG  DIAGS ALARM
```

The Record Display screen (read only) displays the selected records.

```
time     date    flags
10:01 06/20/05 FC0088900
10:02 06/20/05 FC0088900
10:03 06/20/05 FC0088900
10:04 06/20/05 FC0088900
 ⬆⬇ PGUP/DN   ⬅➡ PAN L/R

RANGE  AVG  DIAGS ALARM
```

Erase Log

The Erase Log is used to erase all saved data for the selected record type (not all short records and long records).

- In the Main Menu, choose Instrument Controls > Datalogging Settings > **Erase Log**.

```
ERASE LREC LOG FILE DATA?
                ↵ ERASE

 RANGE  AVG  DIAGS ALARM
```

```
ERASE LREC LOG FILE DATA?
                ↵ ERASE
ARE YOU SURE YOU WANT TO?
PRESS ➡ TO CONFIRM ERASURE

 RANGE  AVG  DIAGS ALARM
```

Select Content

The Select Content submenu displays a list of 32 record fields to use and a submenu list of the analog output signal group choices to choose from. Choices are Concentrations, Other Measurements, and Analog Inputs (if the I/O expansion board is installed). This is a temporary list of items for the selected record type that must be committed via the datalogging menu before the changes will apply. Note that committing any changes to this list will erase all currently logged data, as the format of the stored data is changed.

- In the Main Menu, choose Instrument Controls > Datalogging Settings > **Select Content**.

```
LREC FIELDS:
>FIELD 1              NO
 FIELD 2             NOy
 FIELD 3            PRES
 FIELD 4            PMTT
 FIELD 5            INTT
 FIELD 6           CVEXT
 FIELD 7            NONE ⬇

 RANGE  AVG  DIAGS ALARM
```

```
DATA IN LREC FIELD  1:
>CONCENTRATIONS
 OTHER MEASUREMENTS
 ANALOG INPUTS

 RANGE  AVG  DIAGS ALARM
```

Concentrations

The Concentrations screen allows the user to select the output signal that is tied to the selected field item. The selected item is shown by “<--” after it.

Note that at this point, pressing [↵] indicates that these are proposed changes as opposed to implemented changes. To change the selected record format and erase record log file data, see "Commit Content" below. Range (NO_y) is visible only in auto range mode.

- In the Main Menu, choose Instrument Controls > Datalogging Settings > Select Content > Select Field > **Concentrations**.

```
CONCENTRATIONS:
>NONE
 NO                    <--
 DIF
 NOy
 LO NO
 LO DIF
 LO NOy                  ↓

 RANGE  AVG  DIAGS ALARM

 HI NO
 HI DIF
 HI NOy
 RANGE
 PREREACTOR
 LO PREREACTOR
 HI PREREACTOR
```

Other Measurements

The Other Measurements screen allows the user to select the output signal that is tied to the selected field item. The selected item is shown by "<--" after it. Items displayed are determined by the options installed. Note that at this point, pressing [↵] indicates that these are proposed changes as opposed to implemented changes. To change the selected record format and erase record log file data, see "Commit Content" below.

- In the Main Menu, choose Instrument Controls > Datalogging Settings > Select Content > Select Field > **Other Measurements**.

```
OTHER MEASUREMENTS:
>NONE
 INT TEMP
 CHAMBER TEMP
 COOLER TEMP
 EXT CNV TEMP
 CHAMBER PRES
 FLOW                    ↓

 RANGE  AVG  DIAGS ALARM

 PMT VOLTS
 OZONATOR FLOW
```

Analog Inputs

The Analog Inputs screen allows the user to select the output signal (none or analog inputs 1-8) that is tied to the selected field item. The selected item is shown by "<--" after it. Note that at this point, pressing ↵ indicates that these are proposed changes as opposed to implemented changes. To change the selected record format and erase record log file data, see "Commit Content" below.

- In the Main Menu, choose Instrument Controls > Datalogging Settings > Select Content > Select Field > **Analog Inputs**.

```
ANALOG INPUTS:
>NONE
 ANALOG IN 1
 ANALOG IN 2
 ANALOG IN 3
 ANALOG IN 4
 ANALOG IN 5
 ANALOG IN 6                ↓

 RANGE  AVG  DIAGS ALARM
```

Commit Content

The Commit Content screen is used to save the selected output signal that is tied to the selected field item. If no changes have been made "NO CHANGES TO RECORD LIST!" will appear. For more information about selecting the analog output signal group choices, see "Select Content" above.

- In the Main Menu, choose Instrument Controls > Datalogging Settings > **Commit Content**.

```
CHANGE LREC DATA AND
ERASE LREC LOG FILE DATA?
              ↵ COMMIT


 RANGE  AVG  DIAGS ALARM
```

```
CHANGE LREC DATA AND
ERASE LREC LOG FILE DATA?
              ↵ COMMIT
ARE YOU SURE YOU WANT TO?
PRESS → TO CONFIRM ERASURE

 RANGE  AVG  DIAGS ALARM
```

Reset to Default Content

The Reset to Default Content screen is used to reset all of the datalogging field items to default values. For more information about selecting the analog output signal group choices, see "Select Content" above.

- In the Main Menu, choose Instrument Controls > Datalogging Settings > **Reset to Default Content**.

```
RESET LREC DATA AND
ERASE LREC LOG FILE DATA?
                ↵ RESET

 RANGE  AVG  DIAGS ALARM
```

```
RESET LREC DATA AND
ERASE LREC LOG FILE DATA?
                ↵ RESET
ARE YOU SURE YOU WANT TO?
PRESS ➡ TO CONFIRM RESET

 RANGE  AVG  DIAGS ALARM
```

Configure Datalogging

The Configure Datalogging menu deals with datalogging configuration for the currently selected record type.

- In the Main Menu, choose Instrument Controls > Datalogging Settings > **Configure Datalogging**.

```
DATALOGGING SETTINGS:
>LOGGING PERIOD MIN    60
 MEMORY ALLOCATION %   50
 DATA TREATMENT       AVG

 RANGE  AVG  DIAGS ALARM
```

Logging Period Min

The Logging Period Min screen is used to select the logging period in minutes for the record format (srec or lrec). List of choices include: off, 1, 5, 15, 30, and 60 minutes (default).

- In the Main Menu, choose Instrument Controls > Datalogging Settings > Configure Datalogging > **Logging Period Min**.

```
SET PERIOD FOR SREC:
 CURRENTLY:        60 MIN
    SET TO:       OFF MIN

 ⬆⬇ CHANGE VALUE   ↵ SAVE

 RANGE  AVG  DIAGS ALARM
```

Memory Allocation Percent

The Memory Allocation Percent screen is used to select the percentage of each record type for both short records and long records. Percentages between 0 and 100% are available in increments of 10. Changing this value results in log erasure for both short records and long records.

- In the Main Menu, choose Instrument Controls > Datalogging Settings > Configure Datalogging > **Memory Allocation %**.

```
SET PERCENT LRECS:
CURRENTLY:          50%
   SET TO:          60% ?

⬆⬇ CHANGE VALUE    ↵ SAVE

RANGE  AVG  DIAGS ALARM
```

Data Treatment

The Data Treatment screen is used to select the data type for the selected record type: whether the data should be averaged over the interval, the minimum or maximum measured during the interval, or the current value (last value measured). Data treatment doesn't apply to all data, just to the concentration measurement. All other data points log the current value at the end of the interval.

- In the Main Menu, choose Instrument Controls > Datalogging Settings > Configure Datalogging > **Data Treatment**.

```
SET LREC DATA TYPE:
 CURRENTLY:  AVG
    SET TO:  CUR

 ⬆⬇ CHANGE VALUE    ↵ SAVE

 RANGE  AVG  DIAGS ALARM
```

Communication Settings

The Communication Settings menu is used with communications control and configuration.

- In the Main Menu, choose Instrument Controls > **Communication Settings**.

```
COMMUNICATION SETTINGS:
>BAUD RATE
 INSTRUMENT ID
 COMMUNICATION PROTOCOL
 STREAMING DATA CONFIG
 RS-232/RS-485 SELECTION
 TCP/IP SETTINGS

 RANGE  AVG  DIAGS ALARM
```

Baud Rate

The Baud Rate screen is used to set the RS-232/RS-485 interface baud rate. Baud rates of 1200, 2400, 4800, and 9600, 19200, 38400, 57600, and 115200 are available.

- In the Main Menu, choose Instrument Controls > Communication Settings > **Baud Rate**.

```
BAUD RATE:
 CURRENTLY:        9600
    SET TO:       19200   ?

          ↑↓ CHANGE VALUE
           ↵ SAVE VALUE

 RANGE  AVG  DIAGS ALARM
```

Instrument ID

The Instrument ID screen allows the operator to edit the instrument ID. The ID is used to identify the instrument when using the C-Link or MODBUS protocols to control the instrument or collect data. It may be necessary to edit the ID number if two or more of the same instrument are connected to one computer. Valid Instrument ID numbers are from 0 to 127. The Model 42*i* NO_y has a default Instrument ID of 42. For more information about the Instrument ID, see Appendix B "C-Link Protocol Commands" or Appendix C "MODBUS Protocol".

- In the Main Menu, choose Instrument Controls > Communication Settings > **Instrument ID**.

```
INSTRUMENT ID:
 CURRENTLY:              42
    SET TO:              50 ?

          ↑↓ CHANGE VALUE
           ↵ SAVE VALUE

 RANGE  AVG  DIAGS ALARM
```

Communication Protocol

The Communication Protocol screen is used to change the instrument communication protocol for serial communications.

- In the Main Menu, choose Instrument Controls > Communication Settings > **Communication Protocol**.

```
COMMUNICATION PROTOCOL:
 CURRENTLY:          CLINK
    SET TO:     STREAMING ?

          ↑↓ CHANGE VALUE
           ↵ SAVE VALUE

 RANGE  AVG  DIAGS ALARM
```

Streaming Data Configuration

The Streaming Data Configuration menu is used to allow for configuration of the 8 streaming data output items, streaming interval, current data format, and current timestamp setting. The Choose Item Signal submenu displays a list of the analog output signal group choices to choose from. Choices are Concentrations, Other Measurements, and Analog Inputs (if the I/O expansion board option is installed).

Note Add Labels, Prepend Timestamp, and Add Flags are toggle items that change between yes or no when selected. ▲

- In the Main Menu, choose Instrument Controls > Communication Settings > **Streaming Data Config**.

```
STREAMING DATA CONFIG
>INTERVAL          10 SEC
 ADD LABELS          NO
 PREPEND TIMESTAMP   YES
 ADD FLAGS           YES
 ITEM 1              DIF
 ITEM 2             INTT
 ITEM 3             PRES ↓

 RANGE  AVG  DIAGS ALARM
```

```
CHOOSE STREAM DATA:
>CONCENTRATIONS
 OTHER MEASUREMENTS
 ANALOG INPUTS




 RANGE  AVG  DIAGS ALARM
```

Streaming Data Interval

The Streaming Data Interval screen is used to adjust the streaming data interval. The following interval times are available: 1, 2, 5, 10, 20, 30, 60, 90, 120, 180, 240, and 300 seconds.

- In the Main Menu, choose Instrument Controls > Communication Settings > Streaming Data Config > **Streaming Data Interval**.

```
STREAMING DATA INTERVAL:
 CURRENTLY:        10 SEC
    SET TO:        20 SEC ?

          ↑↓ CHANGE VALUE
           ↵ SAVE VALUE

 RANGE  AVG  DIAGS ALARM
```

Concentrations

The Concentrations screen allows the user to select the output signal that is tied to the selected streaming data item. The selected item is shown by "<--" after it. In dual or auto range mode, "HI" or "LO" is displayed to indicate high or low concentrations. Range (NO_y) is visible only in auto range mode.

- In the Main Menu, choose Instrument Controls > Communication Settings > Streaming Data Config > Select Item > **Concentrations**.

```
CONCENTRATIONS:
>NONE
 NO
 DIF                    <--
 NOy
 RANGE
 PREREACTOR

 RANGE  AVG  DIAGS ALARM
```

Other Measurements

The Other Measurements screen allows the user to select the output signal that is tied to the selected streaming data item. The selected item is shown by "<--" after it. Items displayed are determined by the options installed.

- In the Main Menu, choose Instrument Controls > Communication Settings > Streaming Data Config > Select Item > **Other Measurements**.

```
OTHER MEASUREMENTS:
>NONE
 INT TEMP
 CHAMBER TEMP
 COOLER TEMP
 EXT CNV TEMP
 CHAMBER PRES
 FLOW                    ↓

 RANGE  AVG  DIAGS ALARM
```

```
 PMT VOLTS
 OZONATOR FLOW
```

Analog Inputs

The Analog Inputs screen allows the user to select the analog input signal (none or analog inputs 1-8) that is tied to the selected streaming data item. The selected item is shown by "<--" after it.

- In the Main Menu, choose Instrument Controls > Communication Settings > Streaming Data Config > Select Item > **Analog Inputs**.

```
ANALOG INPUTS:
>NONE
 ANALOG IN 1
 ANALOG IN 2
 ANALOG IN 3
 ANALOG IN 4
 ANALOG IN 5
 ANALOG IN 6             ↓

 RANGE  AVG  DIAGS ALARM
```

RS-232/RS-485 Selection

The RS-232/RS-485 Selection screen allows the user to choose between the RS-232 or RS-485 specification for serial communication.

Note Disconnect the serial cable before changing RS-232 and RS-485 selection to prevent damage to the connected equipment. ▲

- In the Main Menu, choose Instrument Controls > Communication Settings > **RS-232/RS-485 Selection**.

```
RS-232/RS-485 SELECTION:
      ** WARNING **
  DISCONNECT THE SERIAL
  CABLES BEFORE CHANGING
      THE SELECTION!
            ↵ TO CONTINUE

 RANGE  AVG  DIAGS ALARM
```

```
RS-232/RS-485 SELECTION:
 CURRENTLY:        RS-232
    SET TO:        RS-485 ?
MAKE SURE THAT THE CABLE
IS OFF: PRESS ➡ TO CONFIRM
            ↵ TOGGLE VALUE

 RANGE  AVG  DIAGS ALARM
```

TCP/IP Settings

The TCP/IP Settings menu is used for defining TCP/IP settings

Note The instrument power must be cycled after any of these parameters have been changed for the change to take effect. ▲

- In the Main Menu, choose Instrument Controls > Communication Settings > **TCP/IP Settings**.

```
TCP/IP SETTINGS:
>USE DHCP                OFF
 IP ADDR     10.209.43.237
 NETMASK     255.255.254.0
 GATEWAY       10.209.42.1
 HOST NAME          iSeries


 RANGE  AVG  DIAGS ALARM
```

Use DHCP

The Use DHCP screen is used to specify whether to use DHCP or not. When DHCP is enabled, the network dynamically provides an IP address for the instrument.

- In the Main Menu, choose Instrument Controls > Communication Settings > TCP/IP Settings > **Use DCHP**.

```
DHCP:
 CURRENTLY:            OFF
    SET TO:             ON ?

            ↵ TOGGLE VALUE
CYCLE POWER TO CHANGE DHCP

 RANGE   AVG   DIAGS ALARM
```

IP Address

The IP Address screen is used to edit the IP address. The IP address can only be changed when DHCP is OFF. For more information on DHCP, see “Use DHCP” above.

- In the Main Menu, choose Instrument Controls > Communication Settings > TCP/IP Settings > **IP Address**.

```
IP ADDRESS:
 CURRENT: 10.209.43.237
  SET TO: 10.209.43.237 ■
          ←→ MOVE CURSOR
          ↑↓ CHANGE VALUE
           ↵ SAVE VALUE

 RANGE   AVG   DIAGS ALARM
```

Netmask

The Netmask screen is used to edit the netmask. The netmask is used to determine the subnet for which the instrument can directly communicate to other devices on. The netmask can only be changed when DHCP is OFF. For more information on DHCP, see “Use DHCP” above.

- In the Main Menu, choose Instrument Controls > Communication Settings > TCP/IP Settings > **Netmask**.

```
NETMASK:
 CURRENT: 255.255.254.0
  SET TO: 255.255.254.0 ▌
          ←→ MOVE CURSOR
          ↑↓ CHANGE VALUE
           ↵ SAVE VALUE

 RANGE  AVG  DIAGS ALARM
```

Default Gateway

The Default Gateway screen is used to edit the gateway address. The default gateway can only be changed when DHCP is OFF. For more information on DHCP, see "Use DHCP" above. Any traffic to addresses that are not on the local subnet will be routed through this address.

- In the Main Menu, choose Instrument Controls > Communication Settings > TCP/IP Settings > **Gateway**.

```
DEFAULT GATEWAY:
 CURRENT: 10.209.42.1
  SET TO: 10.209.42.1   ▌
          ←→ MOVE CURSOR
          ↑↓ CHANGE VALUE
           ↵ SAVE VALUE

 RANGE  AVG  DIAGS ALARM
```

Host Name

The host name screen is used to edit the host name. When DHCP is enabled, this name is reported to the DHCP server.

- In the Main Menu, choose Instrument Controls > Communication Settings > TCP/IP Settings > **Host Name**.

```
HOST NAME:
  CURRENT: ISERIES
           ▌SERIES        ?
     ABCDEFGHIJKLMN  BKSP
     OPQRSTUVWXYZ    PAGE
     0123456789 ./-  SAVE

 RANGE  AVG  DIAGS ALARM
```

I/O Configuration

The I/O Configuration menu deals with configuration of the analyzer's I/O system. The analog input configuration is displayed only if the I/O expansion board option is installed.

- In the Main Menu, choose Instrument Controls > **I/O Configuration**.

Note The digital outputs may take up to one second after the assigned state occurs to show up on the outputs. ▲

```
I/O CONFIGURATION:
>OUTPUT RELAY SETTINGS
 DIGITAL INPUT SETTINGS
 ANALOG OUTPUT CONFIG
 ANALOG INPUT CONFIG



 RANGE  AVG  DIAGS ALARM
```

Output Relay Settings

The Output Relay Settings menu displays a list of the 10 digital output relays available, and allows the user to select the logic state or instrument parameter for the relay selected.

- In the Main Menu, choose Instrument Controls > I/O Configuration > **Output Relay Settings**.

```
OUTPUT RELAY SETTINGS:
>1   NOP        GEN ALARM
 2   NOP             NONE
 3   NOP            UNITS
 4   NOP       CONC ALARM
 5   NOP             NONE
 6   NOP             NONE
 7   NOP          NO MODE ↓

 RANGE  AVG  DIAGS ALARM
```

Logic State

The Logic State screen is used to change the I/O relay to either normally open or normally closed.

- Press [↵] to toggle and set the logic state open or closed.

```
OUTPUT RELAY SETUP:
>LOGIC STATE          OPEN
 INSTRUMENT STATE

 RANGE  AVG  DIAGS ALARM
```

Instrument State

The Instrument State submenu allows the user to select the instrument state that is tied to the selected relay output. A submenu lists signal types of either alarm or non-alarm to choose from.

- In the Main Menu, choose Instrument Controls > I/O Configuration > Output Relay Settings > Select Relay > **Instrument State**.

```
CHOOSE SIGNAL TYPE:
>ALARMS
 NON-ALARM

 RANGE  AVG  DIAGS ALARM
```

Alarms

The Alarms status screen allows the user to select the alarm status for the selected relay output. The selected item is shown by "<--" after it. The I/O board status alarm is only present if the I/O expansion board is installed. The zero and span check/calibration alarms are only present if the zero/span valve option is installed and the instrument is operating in manual mode.

- In the Main Menu, choose Instrument Controls > I/O Configuration > Output Relay Settings > Select Relay > Instrument State > **Alarms**.

```
ALARM STATUS ITEMS:
>NONE
 GEN ALARM              <--
 NO CONC MAX
 NO CONC MIN
 DIF CONC MAX
 DIF CONC MIN
 NOy CONC MAX            ↓

 RANGE  AVG  DIAGS ALARM
```

```
NOy CONC MIN
INT TEMP
CHAMB TEMP
COOLER TEMP
EXT CV TEMP
PRESSURE
FLOW
OZONE FLOW
MB STATUS
MIB STATUS
I/O BD STATUS
CONC ALARM
EXT CONV STAT
ZERO CHK/CAL
SPAN CHK/CAL
```

Non-Alarm

The Non-Alarm status screen allows the user to select the non-alarm status for the selected relay output. The selected item is shown by "<--" after it.

- In the Main Menu, choose Instrument Controls > I/O Configuration > Output Relay Settings > Select Relay > Instrument State > **Non-Alarm**.

```
NON ALARM STATUS ITEMS:
>NONE
 AUTORANGE (NO)
 SERVICE
 UNITS
 ZERO MODE
 SPAN MODE
 NO MODE                 ↓

 RANGE  AVG  DIAGS ALARM
```

```
NOy MODE
PRE MODE
SAMPLE MODE
PURGE MODE
```

Digital Input Settings

The Digital Input Settings menu displays a list of the 16 digital inputs available, and allows the user to select the logic state and instrument parameter for the relay selected.

Note The digital inputs must be asserted for at least one second for the action to be activated. ▲

- In the Main Menu, choose Instrument Controls > I/O Configuration > **Digital Input Settings**.

```
DIGITAL INPUT SETTINGS:
>1   NOP          NO MODE
 2   NOP         NOy MODE
 3   NOP  SET BACKGROUND
 4   NOP  CAL TO LO SPAN
 5   NOP   AOUTS TO ZERO
 6   NOP     AOUTS TO FS
 7   NOP             NONE ↓

 RANGE  AVG  DIAGS ALARM
```

Logic State

The Logic State screen is used to change the I/O relay to either normally open or normally closed. The default state is open, which indicates that a relay connected between the digital input pin and ground is normally open and closes to trigger the digital input action. If nothing is connected to the digital input pin, the state should be left at open to prevent the action from being triggered.

- Press [↵] to toggle and set the logic state open or closed.

```
DIGITAL INPUT SETUP:
>LOGIC STATE          OPEN
 INSTRUMENT STATE

 RANGE  AVG  DIAGS ALARM
```

Instrument Action

The Instrument Action screen allows the user to choose the instrument action that is tied to the selected digital input.

- In the Main Menu, choose Instrument Controls > I/O Configuration > Digital Input Settings > Select Relay > **Instrument Action**.

```
CHOOSE ACTION:
>NONE
 ZERO MODE
 SPAN MODE
 NO MODE                <--
 NOy MODE
 PRE MODE
 SET BACKGROUND          ↓

 RANGE  AVG  DIAGS ALARM
```

```
CAL TO LO SPAN
AOUTS TO ZERO
AOUTS TO FS
CAL TO HI SPAN
```

Analog Output Configuration

The Analog Output Configuration menu displays a list of the analog output channels available for configuration. Channel choices include all voltage channels, all current channels, voltage channels 1-6, and current channels 1-6 (if the I/O expansion board option is installed). Configuration choices include selecting range, setting minimum/maximum values, and choosing signal to output.

- In the Main Menu, choose Instrument Controls > I/O Configuration > **Analog Output Config**.

```
OUTPUT CHANNELS:
>ALL VOLTAGE CHANNELS
 ALL CURRENT CHANNELS
 VOLTAGE CHANNEL 1
 VOLTAGE CHANNEL 2
 VOLTAGE CHANNEL 3
 VOLTAGE CHANNEL 4
 VOLTAGE CHANNEL 5       ↓

 RANGE  AVG  DIAGS ALARM
```

```
ANALOG OUTPUT CONFIG:
>SELECT RANGE
 SET MINIMUM VALUE
 SET MAXIMUM VALUE
 CHOOSE SIGNAL TO OUTPUT



 RANGE  AVG  DIAGS ALARM
```

Select Output Range

The Select Output Range screen is used to select the hardware range for the selected analog output channel. Possible ranges for the voltage outputs are: 0-100 mV, 0-1, 0-5, 0-10 V.

- In the Main Menu, choose Instrument Controls > I/O Configuration > Analog Output Config > Select Channel > **Select Range**.

```
SELECT OUTPUT RANGE:
 SELECTED OUTPUT:    Y ALL
 CURRENTLY:        0-10V
    SET TO:         0-5V  ?

 ↑↓ CHANGE VALUE    ↵ SAVE

 RANGE  AVG  DIAGS ALARM
```

Minimum and Maximum Value

The Minimum Value screen is used to edit the zero (0) to full-scale (100) value in percentages for the selected analog output channel. See Table 3–6 for a list of choices. In dual or auto range mode, “HI” or “LO” is displayed to indicate high or low concentrations. Range Status is visible only in auto range mode. The minimum and maximum output value screens function the same way. The example below shows the set minimum value screen.

- In the Main Menu, choose Instrument Controls > IO Configuration > Analog Output Config > Select Channel > **Set Minimum** or **Maximum Value**.

```
MINIMUM OUTPUT PERCENT:
 SELECTED OUTPUT:   Y ALL
 CURRENTLY:         N/A %
    SET TO:      0000.3 % ?

 ↑↓ CHANGE VALUE    ↵ SAVE

 RANGE  AVG  DIAGS ALARM
```

Table 3–6. Analog Output Zero to Full-Scale Table

Output	Zero % Value	Full-Scale 100% Value
NO	Zero (0)	Range Setting
DIF	Zero (0)	Range Setting
NO_y	Zero (0)	Range Setting
LO NO	Zero (0)	Range Setting
LO DIF	Zero (0)	Range Setting
LO NO_y	Zero (0)	Range Setting

Output	Zero % Value	Full-Scale 100% Value
HI NO	Zero (0)	Range Setting
HI DIF	Zero (0)	Range Setting
HI NO_y	Zero (0)	Range Setting
Prereactor	Zero (0)	Range Setting
LO Prereactor	Zero (0)	Range Setting
HI Prereactor	Zero (0)	Range Setting
Range	Recommend not to change the setting for this output	
Internal Temp	User-set alarm min value	User-set alarm max value
Chamber Temp	User-set alarm min value	User-set alarm max value
Cooler Temp	User-set alarm min value	User-set alarm max value
External Converter Temp	User-set alarm min value	User-set alarm max value
Chamber Pressure	User-set alarm min value	User-set alarm max value
Flow	User-set alarm min value	User-set alarm max value
PMT Volts	700 volts	1100 volts
Ozonator Flow	User-set alarm min value	User-set alarm max value
Everything Else	0 Units	10 Units

Choose Signal to Output

The Choose Signal to Output screen displays a submenu list of the analog output signal group choices. Group choices are Concentrations, Other Measurements, and Analog Inputs (if the I/O expansion board option is installed). This allows the user to select the output signal to the selected output channel. In dual or auto range mode, “HI” or “LO” is displayed to indicate high or low concentrations. Range (NO_y) is visible only in auto range mode. The Concentrations screen is shown below. See Table 3–7 below for a list of items for each signal group choice.

- In the Main Menu, choose Instrument Controls > I/O Configuration > Analog Output Config > Select Channel > **Choose Signal to Output**.

```
CHOOSE SIGNAL TYPE:
>CONCENTRATIONS
 OTHER MEASUREMENTS
 ANALOG INPUTS



 RANGE  AVG  DIAGS ALARM
```

```
CHOOSE SIGNAL -     CONC
 SELECTED OUTPUT:    V1
 CURRENTLY: NO
    SET TO: NONE         ?

 ↑↓ CHANGE VALUE    ↵ SAVE

 RANGE  AVG  DIAGS ALARM
```

Table 3–7. Signal Type Group Choices

Concentrations	Other Measurements	Analog Inputs
None	None	None
NO (single/auto range mode)	Internal Temp	Analog Input 1
DIF (single/auto range mode)	Chamber Temp	Analog Input 2
NO_y (single/auto range mode)	Cooler Temp	Analog Input 3
LO NO (dual mode)	External Converter Temp	Analog Input 4
LO DIF (dual mode)	Chamber Pressure	Analog Input 5
LO NO_y (dual mode)	Flow	Analog Input 6
HI NO (dual mode)	PMT Volts	Analog Input 7
HI DIF (dual mode)	Ozonator Flow	Analog Input 8
HI NO_y (dual mode)		
Range (auto range mode)		
Prereactor (single/auto range mode)		
LO Prereactor (dual mode)		
HI Prereactor (dual mode)		

Analog Input Configuration

The Analog Input Configuration menu displays a list of the 8 analog input channels available for configuration. This screen is only displayed if the I/O expansion board option is installed. Configuration includes entering descriptor, units, decimal places, choice of 1-10 points in the table, and corresponding number of points selected.

- In the Main Menu, choose Instrument Controls > I/O Configuration > **Analog Input Config**.

```
ANALOG INPUT CONFIG:
>CHANNEL 1            IN1
 CHANNEL 2            IN2
 CHANNEL 3            IN3
 CHANNEL 4            IN4
 CHANNEL 5            IN5
 CHANNEL 6            IN6
 CHANNEL 7            IN7↓

 RANGE  AVG  DIAGS ALARM
```

```
ANALOG INPUT 01 CONFIG:
>DESCRIPTOR           IN1
 UNITS                  V
 DECIMAL PLACES         2
 TABLE POINTS           2
 POINT 1
 POINT 2

 RANGE  AVG  DIAGS ALARM
```

Descriptor

The Descriptor screen allows the user to enter the descriptor for the selected analog input channel. The descriptor is used in datalogging and streaming data to report what data is being sent out. The descriptor may be from 1 to 3 characters in length, and defaults to IN1 to IN8 (user input channel number).

- In the Main Menu, choose Instrument Controls > I/O Configuration > Analog Input Config > Select Channel > **Descriptor**.

```
ANALOG INPUT DESCRIPTOR:
 CURRENTLY: IN1
            IN1
     ABCDEFGHIJKLMN  BKSP
     OPQRSTUVWXYZ    PAGE
     0123456789 ./-  SAVE

 RANGE  AVG  DIAGS ALARM
```

Units

The Units screen allows the user to enter the units for the selected analog input channel. The units are displayed on the diagnostic screen and in datalogging and streaming data. The units may be from 1 to 3 characters in length, and defaults to V (volts).

- In the Main Menu, choose Instrument Controls > I/O Configuration > Analog Input Config > Select Channel > **Units**.

```
ANALOG INPUT UNITS:
 CURRENTLY: V
            V
     ABCDEFGHIJKLMN  BKSP
     OPQRSTUVWXYZ    PAGE
     0123456789 ./-  SAVE

 RANGE  AVG  DIAGS ALARM
```

Decimal Places

The Decimal Places screen allows the user to select how many digits are displayed to the right of the decimal, from 0 to 6, with a default of 2.

- In the Main Menu, choose Instrument Controls > I/O Configuration > Analog Input Config > Select Channel > **Decimal Places**.

```
DECIMAL PLACES:
 CURRENTLY:            2
    SET TO:            3 ?

          ↑↓ CHANGE VALUE
           ↵ SAVE VALUE

 RANGE  AVG  DIAGS ALARM
```

Number of Table Points

The Number of Table Points screen allows the user to select how many points are used in the conversion table. The points range from 2 to 10, with a default of 2.

- In the Main Menu, choose Instrument Controls > I/O Configuration > Analog Input Config > Select Channel > **Table Points**.

```
NUMBER OF TABLE POINTS:
 CURRENTLY:            2
    SET TO:           10 ?

          ↑↓ CHANGE VALUE
           ↵ SAVE VALUE

 RANGE  AVG  DIAGS ALARM
```

Table Point

The Table Point submenu allows the user to set up an individual table point.

- In the Main Menu, choose Instrument Controls > I/O Configuration > Analog Input Config > Select Channel > **Point 1-10**.

```
TABLE POINT 01 CONFIG:
>VOLTS                0.00
 USER VALUE           0.00

 RANGE  AVG  DIAGS ALARM
```

Volts

The Volts screen allows the user to set the input voltage for the selected table point in the conversion table, from 0.00 to 10.50. The default table is a two-point table with point 1: 0.00 V = 000.0 U and point 2: 10.00 V = 10.0 U.

- In the Main Menu, choose Instrument Controls > I/O Configuration > Analog Input Config > Select Channel > Select Point > **Volts**.

```
TABLE POINT 01 VOLTS:
 CURRENTLY:           0.00
    SET TO:          00.00

          ↔ MOVE CURSOR
 ↑↓ CHANGE VALUE   ↵ SAVE

 RANGE  AVG  DIAGS ALARM
```

User Value

The User Value screen allows the user to set the output value for the corresponding input voltage for the selected table point in the conversion table, from -9999999 to 99999999. The default table is a two-point table with point 1: 0.00 V = 000.0 U and point 2: 10.00 V = 10.0 U.

- In the Main Menu, choose Instrument Controls > I/O Configuration > Analog Input Config > Select Table Point > **User Value**.

```
TABLE POINT 01 USER VAL:
 CURRENTLY:          0.00
    SET TO:      00000.01

          ↔ MOVE CURSOR
 ↑↓ CHANGE VALUE   ↵ SAVE

 RANGE  AVG  DIAGS ALARM
```

Temperature Compensation

Temperature compensation provides compensation for any changes to the instrument's output signal due to internal instrument temperature variations. The effects of internal instrument temperature changes on the analyzer's subsystems and output have been empirically determined. This empirical data is used to compensate for any changes in temperature.

When temperature compensation is on, the display shows the current internal instrument temperature (measured by a thermistor on the Interface board). When temperature compensation is off, the display shows the factory standard temperature of 30 °C.

- In the Main Menu, choose Instrument Controls > **Temperature Compensation**.

```
TEMPERATURE COMPENSATION:
 COMP TEMP:       30.0 °C
 CURRENTLY:           OFF
    SET TO:            ON ?

            ↵ TOGGLE VALUE

 RANGE  AVG  DIAGS ALARM
```

Pressure Compensation

Pressure compensation provides compensation for any changes to the instrument's output signal due to reaction chamber pressure variations. The effects of reaction chamber pressure changes on the analyzer's subsystems and output have been empirically determined. This empirical data is used to compensate for any change in reaction chamber pressure.

When pressure compensation is on, the first line of the display represents the current pressure in the reaction chamber in prereactor mode. When pressure compensation is off, the first line of the display shows the factory standard pressure of 300 mmHg.

Note Turning the pressure compensation ON and OFF can produce significant artificial jumps in the apparent sample concentration. If the

pressure compensation feature is to be used, the instrument must be calibrated with the pressure compensation feature ON. For more information about calibration, see Chapter 4, “Calibration”. ▲

- In the Main Menu, choose Instrument Controls > **Pressure Compensation**.

```
PRESSURE COMPENSATION:
 COMP PRES:    300.0 mmHg
 CURRENTLY:           OFF
    SET TO:            ON ?

            ↵ TOGGLE VALUE

 RANGE  AVG  DIAGS ALARM
```

Screen Contrast

The Screen Contrast screen is used to change the contrast of the display. Intensities between 0 and 100% in increments of 10 are available. Changing the screen contrast may be necessary if the instrument is operated at extreme temperatures.

- In the Main Menu, choose Instrument Controls > **Screen Contrast**.

```
SCREEN CONTRAST:
 CURRENTLY:          50 %
    SET TO:          60 % ?

           ↑↓ CHANGE VALUE
            ↵ SAVE VALUE

 RANGE  AVG  DIAGS ALARM
```

Service Mode

The Service Mode screen is used to turn the service mode on or off. The service mode locks out any remote actions and includes parameters and functions that are useful when making adjustments or diagnosing the Model 42*i* NO_y. For more information about the service mode, see “Service Menu” later in this chapter.

Note The service mode should be turned off when finished, as it prevents remote operation. ▲

- In the Main Menu, choose Instrument Controls > **Service Mode**.

```
SERVICE MODE:
 CURRENTLY:              OFF
    SET TO:               ON ?

            ↵ TOGGLE VALUE

 RANGE  AVG  DIAGS ALARM
```

Date/Time

The Date/Time screen allows the user to view and change the system date and time (24-hour format). The internal clock is powered by its own battery when instrument power is off.

- In the Main Menu, choose Instrument Controls > **Date/Time**.

```
DATE AND TIME:
 19 MAR 2005  12:34:56
 PRESS ↵ TO EDIT

 RANGE  AVG  DIAGS ALARM
```

```
DATE AND TIME:
 19 MAR 2005  12:34:56   ?
 SETTING: DAYS
            → SET MONTHS
           ↑↓ CHANGE VALUE
            ↵ SAVE VALUE

 RANGE  AVG  DIAGS ALARM
```

Diagnostics Menu

The Diagnostics menu provides access to diagnostic information and functions. This menu is useful when troubleshooting the instrument. The analog input readings and analog input voltages are only displayed if the I/O expansion board option is installed.

- In the Main Menu, choose **Diagnostics**.

```
DIAGNOSTICS:
>PROGRAM VERSION
 VOLTAGES
 TEMPERATURES
 PRESSURE
 FLOW
 PREREACTOR ZERO
 ANALOG INPUT READINGS    ↓

 RANGE  AVG  DIAGS ALARM
```

```
 ANALOG INPUT VOLTAGES
 DIGITAL INPUTS
 RELAY STATES
 TEST ANALOG OUTPUTS
 INSTRUMENT CONFIGURATION
 CONTACT INFORMATION
```

Program Versions

The Program Versions screen (read only) shows the version numbers of the programs installed. Prior to contacting the factory with any questions regarding the instrument, please note the product model name and program version number.

- In the Main Menu, choose Diagnostics > **Program Versions**.

```
PROGRAM VERSIONS:
   PRODUCT:  MODEL 42iNOy
   VERSION:  01.03.21.154
  FIRMWARE:      09.06.19


 RANGE  AVG  DIAGS ALARM
```

Voltages

The Voltages menu displays the current diagnostic voltage readings. This screen enables the power supply to be quickly read for low or fluctuating voltages without having to use a voltage meter. The I/O board is only displayed if the I/O expansion board option is installed.

- In the Main Menu, choose Diagnostics > **Voltages**.

```
VOLTAGES:
>MOTHERBOARD
 INTERFACE BOARD
 I/O BOARD
 EXT CONVERTER BOARD



 RANGE  AVG  DIAGS ALARM
```

Motherboard Voltages

The Motherboard screen (read only) is used to display the current voltage readings on the motherboard.

- In the Main Menu, choose Diagnostics > Voltages > **Motherboard Voltages**.

```
MOTHERBOARD VOLTAGES:
   3.3 SUPPLY        3.3 V
   5.0 SUPPLY        5.0 V
  15.0 SUPPLY       15.0 V
  24.0 SUPPLY       24.1 V
  -3.3 SUPPLY       -3.3 V



 RANGE  AVG  DIAGS ALARM
```

Interface Board Voltages

The Interface Board screen (read only) is used to display the current voltage readings on the interface board.

- In the Main Menu, choose Diagnostics > Voltages > **Interface Board Voltages**.

```
INTERFACE BOARD VOLTAGES:
   PMT              785.5 V
   3.3 SUPPLY         3.3 V
   5.0 SUPPLY         5.0 V
  15.0 SUPPLY        15.0 V
 P15.0 SUPPLY        15.0 V
  24.0 SUPPLY        24.0 V
 -15.0 SUPPLY       -15.0 V

 RANGE  AVG  DIAGS ALARM
```

I/O Board Voltages

The I/O Board screen (read only) is used to display the current voltage readings on the I/O expansion board. This menu is only displayed if the I/O expansion board option is installed.

- In the Main Menu, choose Diagnostics > Voltages > **I/O Board Voltages**.

```
I/O BOARD VOLTAGES:
   3.3 SUPPLY        3.3 V
   5.0 SUPPLY        5.0 V
  24.0 SUPPLY       24.0 V
  -3.3 SUPPLY       -3.3 V

 RANGE  AVG  DIAGS ALARM
```

External Converter Board Voltages

The External Converter Board screen (read only) is used to display the current voltage readings on the external converter board.

- In the Main Menu, choose Diagnostics > Voltages > **Ext Converter Board Voltages**.

```
EXT CONV BOARD VOLTAGES:
  15.0 SUPPLY       15.0 V
  24.0 SUPPLY       24.0 V
 -15.0 SUPPLY      -15.0 V

 RANGE  AVG  DIAGS ALARM
```

Temperatures

The Temperatures screen (read only) displays the internal temperature, reaction chamber temperature, cooler temperature, and converter temperatures. The internal temperature is the air temperature measured by a sensor located on the interface board.

- In the Main Menu, choose Diagnostics > **Temperatures**.

```
TEMPERATURES:
 INTERNAL          28.6  °C
 CHAMBER           49.2  °C
 COOLER           -10.0  °C
 EXT CONVERTER    320.7  °C
 EXT CONV SET     325.0  °C

 RANGE  AVG  DIAGS ALARM
```

Pressure

The Pressure screen (read only) displays the reaction chamber pressure. The pressure is measured by a pressure transducer at the reaction chamber. This value is updated once per second, so it will shift as the measurement mode changes between NO, NO_y, and prereactor mode.

- In the Main Menu, choose Diagnostics > **Pressure**.

```
PRESSURE:        282.5 mmHg



 RANGE  AVG  DIAGS ALARM
```

Flow

The Flow screen (read only) displays the sample and ozonator flow rate. The flows are measured by internal flow sensors. For more information, see "Introduction".

- In the Main Menu, choose Diagnostics > **Flow**.

```
FLOW:              1.300 LPM
OZONATOR FLOW          OK

 RANGE  AVG  DIAGS ALARM
```

Prereactor Zero

The Prereactor Zero screen (read only) displays the current prereactor background (zero) reading. In dual or auto range modes, low range and high range are displayed. The example below shows the prereactor zero screen in single range mode.

- In the Main Menu, choose Diagnostics > **Prereactor Zero.**

```
PREREACTOR:          0.68



 RANGE  AVG  DIAGS ALARM
```

Analog Input Readings

The Analog Input Readings screen (read only) displays the 8 current user-scaled analog readings (if the I/O expansion board option is installed).

- In the Main Menu, choose Diagnostics > **Analog Input Readings**.

```
ANALOG INPUT READINGS:
>CO                10.2 PPM
 SO2               18.2 PPB
 CO2                250 PPM
 FL1             20.42 LPM
 WND              9.86   V
 FL2             1.865 LPM
 IO7               0.0   V↓

 RANGE  AVG  DIAGS ALARM
```

Analog Input Voltages

The Analog Input Voltages screen (read only) displays the 8 raw analog voltage readings (if the I/O expansion board option is installed).

- In the Main Menu, choose Diagnostics > **Analog Input Voltages**.

```
ANALOG INPUT VOLTAGES:
>ANALOG IN 1        6.24 V
 ANALOG IN 2        4.28 V
 ANALOG IN 3        0.00 V
 ANALOG IN 4        0.00 V
 ANALOG IN 5        0.00 V
 ANALOG IN 6        0.00 V
 ANALOG IN 7        0.00 V↓

 RANGE  AVG  DIAGS ALARM
```

Digital Inputs

The Digital Inputs screen (read only) displays the state of the 16 digital inputs.

- In the Main Menu, choose Diagnostics > **Digital Inputs**.

```
DIGITAL INPUTS:
>INPUT 1                1
 INPUT 2                1
 INPUT 3                1
 INPUT 4                1
 INPUT 5                1
 INPUT 6                1
 INPUT 7                1↓

 RANGE  AVG  DIAGS ALARM
```

Relay States

The Relay States screen displays the state of the 10 digital outputs and allows toggling of the state to either on (1) or off (0). The relays are restored to their original states upon exiting this screen.

- In the Main Menu, choose Diagnostics > **Relay States**.
- Press [↵] to toggle and set the relay state open or closed.

```
RELAY STATE:
>OUTPUT 1               0
 OUTPUT 2               0
 OUTPUT 3               0
 OUTPUT 4               1
 OUTPUT 5               0
 OUTPUT 6               0
 OUTPUT 7               1↓

 RANGE  AVG  DIAGS ALARM
```

Test Analog Outputs

The Test Analog Outputs menu contains a number of digital to analog converter (DAC) calibration items. Channel choices include all analog outputs, 6 voltage channels, and 6 current channels (if the I/O expansion board option is installed).

- In the Main Menu, choose Diagnostics > **Test Analog Outputs**.

```
TEST ANALOG OUTPUTS:
>ALL
 VOLTAGE CHANNEL 1
 VOLTAGE CHANNEL 2
 VOLTAGE CHANNEL 3
 VOLTAGE CHANNEL 4
 VOLTAGE CHANNEL 5
 VOLTAGE CHANNEL 6

 RANGE  AVG  DIAGS ALARM
```

Set Analog Outputs

The Set Analog Outputs screen contains three choices: Set to full-scale, set to zero, or reset to normal. Full-scale sets the analog outputs to the full-

scale voltage, zero sets the analog outputs to 0 volts, and normal operation. The example below shows the selected output state "ALL" is set to normal.

- In the Main Menu, choose Diagnostics > Test Analog Outputs > **ALL, Voltage Channel 1-6**, or **Current Channel 1-6**.

```
SET ANALOG OUTPUTS:
 SETTING:                ALL
 OUTPUT SET TO:       NORMAL
 ↑ SET TO FULL SCALE
 ↓ SET TO ZERO
 ← RESET TO NORMAL

 RANGE  AVG  DIAGS ALARM
```

Instrument Configuration

The Instrument Configuration screen displays information on the hardware configuration of the instrument.

Note If the analyzer is in service mode, pressing [↵] on the item will toggle it yes or no (with the exception of purchased options). ▲

- In the Main Menu, choose Diagnostics > **Instrument Configuration**.

```
INSTRUMENT CONFIGURATION:
>I/O EXPANSION BOARD  YES
 ZERO/SPAN VALVES     YES
 PERM DRYER           YES
 NH3 SCRUBBER          NO
 CONVERTER            MOLY
 DILUTION              YES
 AUTO CALIBRATION      YES

 RANGE  AVG  DIAGS ALARM
```

Contact Information

The Contact Information screen displays the customer service information.

- In the Main Menu, choose Diagnostics > **Contact Information**.

```
CONTACT INFORMATION:
 CALL CENTER: 508-520-0430
 WEB:        WWW.THERMO.COM

 RANGE  AVG  DIAGS ALARM
```

Alarms Menu

The alarms menu displays a list of items that are monitored by the analyzer. If the item being monitored goes outside the lower or upper limit, the status of that item will go from “OK” to either “LOW” or “HIGH”, respectively. If the alarm is not a level alarm, the status will go from “OK” to “FAIL”. The number of alarms detected is displayed to indicate how many alarms have occurred. If no alarms are detected, the number zero is displayed.

To see the actual reading of an item and its minimum and maximum limits, move the cursor to the item and press [↵].

Items displayed are determined by the options installed. The zero/span check and auto calibration screens are visible only if the zero/span check or auto calibration options are enabled. The motherboard status, interface board status, I/O Expansion board status (if installed), and external converter board status indicate that the power supplies are working and connections are successful. There are no setting screens for these alarms.

- In the Main Menu, choose **Alarms**.

```
ALARMS:
 ALARMS DETECTED          0
>INTERNAL TEMP           OK
 CHAMBER TEMP            OK
 COOLER TEMP             OK
 EXT CONVERTER TEMP      OK
 PRESSURE                OK
 FLOW                    OK↓

 RANGE  AVG  DIAGS ALARM
```

```
 OZONATOR FLOW           OK
 ZERO CHECK              OK
 SPAN CHECK              OK
 ZERO AUTOCAL            OK
 SPAN AUTOCAL            OK
 NO CONCENTRATION        OK
 DIF CONCENTRATION       OK
 NOy CONCENTRATION       OK
 PRE CONCENTRATION       OK
 MOTHERBOARD STATUS      OK
 INTERFACE STATUS        OK
 I/O EXP STATUS          OK
 EXT CONV BD STATUS      OK
```

Internal Temperature

The Internal Temperature screen displays the current internal temperature and sets the minimum and maximum alarm limits. Acceptable alarm limits range from 8 to 47 °C. If the internal temperature reading goes beyond either the minimum or maximum alarm limit, an alarm is activated. The word “ALARM” appears in the Run screen and in the Main Menu.

- In the Main Menu, choose Alarms > **Internal Temp**.

```
INTERNAL TEMPERATURE:
 ACTUAL            28.6 °C
>MIN               15.0 °C
 MAX               45.0 °C




 RANGE  AVG  DIAGS ALARM
```

Min and Max Internal Temperature Limits

The Minimum Internal Temperature alarm limit screen is used to change the minimum internal temperature alarm limit. The minimum and maximum internal temperature screens function the same way.

- In the Main Menu, choose Alarms > Internal Temp > **Min** or **Max**.

```
INTERNAL TEMPERATURE:
 ACTUAL MIN:      15.0  °C
 SET MIN TO:      16.0  °C ?

          ↑↓ INC/DEC
           ↵ SAVE VALUE

 RANGE  AVG  DIAGS ALARM
```

Chamber Temperature

The Chamber Temperature screen displays the current chamber temperature and sets the minimum and maximum alarm limits. Acceptable alarm limits range from 45 to 55 °C. If the chamber temperature reading goes beyond either the minimum or maximum limit, an alarm is activated. The word "ALARM" appears in the Run screen and in the Main Menu.

- In the Main Menu, choose Alarms > **Chamber Temp**.

```
CHAMBER TEMPERATURE:
 ACTUAL            50.0  °C
>MIN               48.0  °C
 MAX               52.0  °C

 RANGE  AVG  DIAGS ALARM
```

Min and Max Chamber Temperature Limits

The Minimum Chamber Temperature alarm limit screen is used to change the minimum chamber temperature alarm limit. The minimum and maximum chamber temperature screens function the same way.

- In the Main Menu, choose Alarms > Chamber Temp > **Min** or **Max**.

```
CHAMBER TEMPERATURE:
 ACTUAL MIN:      47.0  °C
 SET MIN TO:      48.0  °C ?

          ↑↓ INC/DEC
           ↵ SAVE VALUE

 RANGE  AVG  DIAGS ALARM
```

Cooler Temperature

The Cooler Temperature screen displays the current cooler temperature and sets the minimum and maximum alarm limits. Acceptable alarm limits

range from -40 to 10 °C. If the cooler temperature reading goes beyond either the minimum or maximum limit, an alarm is activated. The word "ALARM" appears in the Run screen and in the Main Menu.

- In the Main Menu, choose Alarms > **Cooler Temp**.

```
COOLER TEMPERATURE:
 ACTUAL            -9.8  °C
>MIN             -20.0  °C
 MAX              -1.0  °C

 RANGE  AVG  DIAGS ALARM
```

Min and Max Cooler Temperature Limits

The Minimum Cooler Temperature alarm limit screen is used to change the minimum cooler temperature alarm limit. The minimum and maximum cooler temperature screens function the same way.

- In the Main Menu, choose Alarms > Cooler Temp > **Min** or **Max**.

```
COOLER TEMPERATURE:
 ACTUAL MIN      -20.0  °C
 SET MIN TO:     -10.0  °C ?

          ↑↓ INC/DEC
           ↵ SAVE VALUE

 RANGE  AVG  DIAGS ALARM
```

External Converter Temperature

The External Converter Temperature screen displays the current external converter temperature and sets the minimum and maximum alarm limits. Acceptable alarm limits range from 300 to 700 °C. The actual alarm setpoints should be set for the installed converter. If the external converter temperature reading goes beyond either the minimum or maximum limit, an alarm is activated. The word "ALARM" appears in the Run screen and in the Main Menu.

- In the Main Menu, choose Alarms > **Ext Converter Temp**.

```
EXT CONVERTER TEMP:
 ACTUAL          320.7  °C
>MIN             300.0  °C
 MAX             350.0  °C

 RANGE  AVG  DIAGS ALARM
```

Min and Max External Converter Temperature Limits

The Minimum External Converter Temperature alarm limit screen is used to change the minimum external converter temperature alarm limit. The minimum and maximum external converter temperature screens function the same way.

- In the Main Menu, choose Alarms > Ext Converter Temp > **Min** or **Max**.

```
EXT CONVERTER TEMP:
 ACTUAL MIN      300.0  °C
 SET MIN TO:     310.0  °C ?

          ↑↓ INC/DEC
           ↵ SAVE VALUE

 RANGE  AVG  DIAGS ALARM
```

Pressure

The Pressure screen displays the current reaction chamber pressure reading and sets the minimum and maximum alarm limits. Acceptable alarm limits range from 200 to 450 mmHg. If the pressure reading goes beyond either the minimum or maximum limit, an alarm is activated. The word "ALARM" appears in the Run screen and in the Main Menu.

- In the Main Menu, choose Alarms > **Pressure**.

```
PRESSURE:
 ACTUAL          232.5 mmHg
>MIN             200.0 mmHg
 MAX             450.0 mmHg

 RANGE  AVG  DIAGS ALARM
```

Min and Max Pressure Limits

The Minimum Pressure alarm limit screen is used to change the minimum temperature alarm limit. The minimum and maximum pressure screens function the same way.

- In the Main Menu, choose Alarms > Pressure > **Min** or **Max**.

```
PRESSURE:
 ACTUAL MIN:    200.0 mmHg
 SET MIN TO:    210.0 mmHg?

           ↑↓ INC/DEC
            ↵ SAVE VALUE

 RANGE  AVG  DIAGS ALARM
```

Flow

The Flow screen displays the current sample flow reading and sets the minimum and maximum alarm limits. Acceptable alarm limits range from 0 to 2 LPM. If the sample flow reading goes beyond either the minimum or maximum limit, an alarm is activated. The word “ALARM” appears in the Run screen and in the Main Menu.

- In the Main Menu, choose Alarms > **Flow**.

```
FLOW:
 ACTUAL          1.331 LPM
>MIN             0.750 LPM
 MAX             1.500 LPM



 RANGE  AVG  DIAGS ALARM
```

Min and Max Flow Limits

The Minimum Flow alarm limit screen is used to change the minimum sample flow alarm limit. The minimum and maximum flow screens function the same way.

- In the Main Menu, choose Alarms > Flow > **Min** or **Max**.

```
FLOW:
 ACTUAL MIN:    0.750 LPM
 SET MIN TO:    0.760 LPM ?

          ↑↓ INC/DEC
           ↵ SAVE VALUE

 RANGE  AVG  DIAGS ALARM
```

Ozonator Flow

The Ozonator Flow screen (read only) is used to display the ozonator flow readings. If the ozonator flow reading is 0.050 LPM (50 cc) or below, an alarm is activated, and an alarm condition screen appears as “LOW”. If the ozonator flow is above 0.050, the no alarm condition screen is displayed, indicating that the flow is acceptable. Inadequate ozonator flow will cause the ozonator to overheat, resulting in permanent damage to the ozonator.

- In the Main Menu, choose Alarms > **Ozonator Flow**.

```
OZONATOR FLOW:
 ACTUAL        > 0.050 LPM




 RANGE  AVG  DIAGS ALARM
```

Zero and Span Check

The Zero Span Check screen allows the user to view the status of the most recent zero check and set the maximum zero check offset. The zero and span check screens are visible only if the zero/span check option is enabled and function the same way.

- In the Main Menu, choose Alarms > **Zero** or **Span Check**.

```
ZERO CHECK:
     ALARM:            OK
  RESPONSE:           0.0
>MAX OFFSET          10.0




 RANGE  AVG  DIAGS ALARM
```

Max Zero and Span Offset

The Max Zero Check Offset screen is used to change the maximum zero check offset. The maximum zero and span offset screens function the same way.

- In the Main Menu, choose Alarms > Zero or Span Check > **Max Offset**.

```
MAX ZERO CHECK OFFSET:
  CURRENTLY:        10.0
    SET TO:     00010.00 ?

          ↔ MOVE CURSOR
 ↑↓ CHANGE VALUE    ↵ SAVE

 RANGE  AVG  DIAGS ALARM
```

Zero and Span Auto Calibration

The Zero Auto Calibration screen (read only) allows the user to view the status of the most recent auto background calibration. The zero and span auto calibration screens are visible only if the auto calibration option is enabled and function the same way.

- In the Main Menu, choose Alarms > **Zero** or **Span Autocal**.

```
ZERO AUTO CALIBRATION:
      ALARM:            OK
   RESPONSE:           5.0



 RANGE  AVG  DIAGS ALARM
```

NO, DIF, and NO_y Concentration

The NO Concentration screen displays the current NO concentration and sets the minimum and maximum alarm limits. Acceptable alarm limits range from 0 to 500 ppb or µg/m^3. The minimum alarm may be programmed as a floor trigger (alarm is triggered when the concentration falls below the minimum value) or a ceiling trigger (alarm is triggered when the concentration goes above the minimum value). If the NO concentration goes beyond either the minimum or maximum limit, an alarm is activated. The word “ALARM” appears in the Run screen and in

the Main Menu. The DIF and NO_y concentration screens function the same way.

- In the Main Menu, choose Alarms > **NO, DIF, or NOy Concentration**.

```
NO CONCENTRATION:
 ACTUAL                62.7
>MIN                    0.0
 MAX                  200.0
 MIN TRIGGER        CEILING



 RANGE  AVG  DIAGS ALARM
```

Min and Max NO, DIF, and NO_y Concentration Limits

The Minimum NO Concentration alarm limit screen is used to change the minimum NO concentration alarm limits. The minimum and maximum NO, DIF, and NO_y concentration alarm limit screens function the same way.

- In the Main Menu, choose Alarms > Select Concentration > **Min** or **Max**.

```
NO CONCENTRATION:
 ACTUAL MIN:           0.0
 SET MIN TO:     00020.00 ?

          ↔ MOVE CURSOR
 ↑↓ CHANGE VALUE    ↵ SAVE

 RANGE  AVG  DIAGS ALARM
```

Min Trigger

The Minimum Trigger screen allows the user to view and set the NO, DIF, and NO_y concentration alarm trigger type to either floor or ceiling. The minimum alarm may be programmed as a floor trigger (alarm is triggered when the concentration falls below the minimum value) or a ceiling trigger (alarm is triggered when the concentration goes above the minimum value).

- In the Main Menu, choose Alarms > Select Concentration > **Min Trigger**.

```
MIN TRIG(CEILING/FLOOR):
ACTUAL TRIGGER:  CEILING
SET TRIGGER TO:    FLOOR ?

  ↵ TOGGLE AND SAVE VALUE

 RANGE  AVG  DIAGS ALARM
```

Prereator Concentration

The Prereactor Concentration screen displays the current prereactor concentration and sets the minimum and maximum alarm limits. Acceptable alarm limits range from 0 to 5 ppb or µg/m^3. The minimum alarm may be programmed as a floor trigger (alarm is triggered when the concentration falls below the minimum value) or a ceiling trigger (alarm is triggered when the concentration goes above the minimum value). If the prereactor concentration goes beyond either the minimum or maximum limit, an alarm is activated. The word “ALARM” appears in the Run screen and in the Main Menu.

- In the Main Menu, choose Alarms > **Pre Concentration**.

```
PREREACTOR CONCENTRATION:
 ACTUAL                0.09
>MIN                   0.00
 MAX                   2.00
 MIN TRIGGER        CEILING



 RANGE  AVG  DIAGS ALARM
```

Min and Max Prereactor Concentration Limits

The Minimum Prereactor Concentration alarm limit screen is used to change the minimum prereactor concentration alarm limits. The minimum and maximum prereactor concentration alarm limit screens function the same way.

- In the Main Menu, choose Alarms > Pre Concentration > **Min** or **Max**.

```
PRE CONCENTRATION:
 ACTUAL MIN:          0.0
 SET MIN TO:     00002.00 ?

          ↔ MOVE CURSOR
 ↑↓ CHANGE VALUE   ↵ SAVE

 RANGE  AVG  DIAGS ALARM
```

Min Trigger

The Minimum Trigger screen allows the user to view and set the prereactor concentration alarm trigger type to either floor or ceiling. The minimum alarm may be programmed as a floor trigger (alarm is triggered when the concentration falls below the minimum value) or a ceiling trigger (alarm is triggered when the concentration goes above the minimum value).

- In the Main Menu, choose Alarms > Pre Concentration > **MinTrigger**.

```
MIN TRIG(CEILING/FLOOR):
ACTUAL TRIGGER:  CEILING
SET TRIGGER TO:    FLOOR ?

  ↵ TOGGLE AND SAVE VALUE

 RANGE  AVG  DIAGS ALARM
```

Service Menu

The Service menu appears only when the instrument is in the service mode. To put the instrument into the service mode:

- In the Main Menu, choose Instrument Controls > **Service Mode**.

Advanced diagnostic functions are included in the service mode. Meaningful data should not be collected when the instrument is in the service mode. In dual or auto range modes, “HI” or “LO” multi-point calibration is displayed to indicate the calibration of the high or low concentrations.

- In the Main Menu, choose **Service**.

```
SERVICE:
>PMT VOLTAGE ADJUSTMENT
 RANGE MODE SELECT
 EXT CONVERTER SET TEMP
 PRESSURE CALIBRATION
 FLOW CALIBRATION
 INPUT BOARD CALIBRATION
 TEMPERATURE CALIBRATION ↓

 RANGE  AVG  DIAGS ALARM
```

```
ANALOG OUT CALIBRATION
ANALOG INPUT CALIBRATION
OZONATOR SAFETY
DILUTION RATIO
DISPLAY PIXEL TEST
RESTORE USER DEFAULTS
```

PMT Voltage Adjustment

The PMT Voltage Adjustment screen is used to manually adjust the PMT supply voltage. The PMT voltage adjustment screen is visible only when the instrument is in service mode. For more information on the service mode, see "Service Mode" earlier in this chapter.

Note This adjustment should only be performed by an instrument service technician. ▲

- In the Main Menu, choose Service > **PMT Voltage Adjustment**.

```
SET PMT VOLTAGE:
    SET PMT:        -750.0 V
     COUNTS:          2254 ?

          ↑↓ CHANGE VALUE
           ↵ SAVE VALUE

 RANGE  AVG  DIAGS ALARM
```

Range Mode Select

The Range Mode Select screen is used to switch between the various range modes: single, dual, and auto range.

- In the Main Menu, choose Service > **Range Mode Select**.

```
RANGE MODE SELECT:
 CURRENTLY:        SINGLE
    SET TO:          DUAL ?

          ↑↓ CHANGE VALUE
           ↵ SAVE VALUE

 RANGE  AVG  DIAGS ALARM
```

External Converter Set Temperature

The External Converter Set Temperature screen is used to change the converter set temperature. The external converter set temperature reading is updated every second. The external converter set temperature screen is visible only when the instrument is in service mode. For more information on the service mode, see "Service Mode" earlier in the chapter.

Note This adjustment should only be performed by an instrument service technician. ▲

- In the Main Menu, choose Service > **Ext Converter Set Temperature**.

```
SET EXT CONVERTER TEMP:
 CURRENTLY:        325 °C
    SET TO:        325 °C

          ↑↓ INC/DEC
           ↵ SAVE VALUE

 RANGE  AVG  DIAGS ALARM
```

Pressure Calibration

The Pressure Calibration submenu is used to calibrate the pressure sensor to zero, span, or restore factory default values. The pressure calibration is visible only when the instrument is in service mode. For more information on the service mode, see "Service Mode" earlier in this chapter.

The pressure sensor's zero counts and span slope are displayed on the menu.

Note This adjustment should only be performed by an instrument service technician. ▲

- In the Main Menu, choose Service > **Pressure Calibration**.

```
PRESSURE SENSOR CAL:
>ZERO                    72
 SPAN                1.1416
 SET DEFAULTS

 RANGE  AVG  DIAGS ALARM
```

Calibrate Pressure Zero

The Calibrate Pressure Zero screen calibrates the pressure sensor at zero pressure.

Note A vacuum pump must be connected to the pressure sensor before performing the zero calibration. ▲

- In the Main Menu, choose Service > Pressure Calibration > **Zero**.

```
CALIBRATE PRESSURE ZERO:
 CURRENTLY:    232.5 mmHg
    SET TO:      0.0 mmHg

 CONNECT VACUUM PUMP AND
   ↵ SAVE ZERO PRESSURE

 RANGE  AVG  DIAGS ALARM
```

Calibrate Pressure Span

The Calibrate Pressure Span screen allows the user to view and set the pressure sensor calibration span point.

Note The plumbing going to the pressure sensor should be disconnected so the sensor is reading ambient pressure before performing the span calibration. The operator should use an independent barometer to measure the ambient pressure and enter the value on this screen before calibrating. ▲

- In the Main Menu, choose Service > Pressure Calibration > **Span**.

```
CALIBRATE PRESSURE SPAN:
 CURRENTLY:    232.0 mmHg
    SET TO:    760.0 mmHg ?

           ↔ MOVE CURSOR
 ↑↓ CHANGE VALUE    ↵ SAVE

 RANGE  AVG  DIAGS ALARM
```

Restore Default Pressure Calibration

The Restore Default Calibration screen allows the user to reset the pressure calibration configuration values to factory defaults.

- In the Main Menu, choose Service > Pressure Calibration > **Set Defaults**.

```
RESTORE DEFAULT CAL:
                ↵ RESTORE

 RANGE  AVG  DIAGS ALARM
```

```
RESTORE DEFAULT CAL:
                ↵ RESTORE
ARE YOU SURE YOU WANT TO?
PRESS → TO CONFIRM RESTORE

 RANGE  AVG  DIAGS ALARM
```

Flow Calibration

The Flow Calibration submenu is used to calibrate the flow sensor to zero, span, or restore factory default values. The flow calibration is visible only when the instrument is in service mode. For more information on the service mode, see "Service Mode" earlier in the chapter.

Note This adjustment should only be performed by an instrument service technician. ▲

- In the Main Menu, choose Service > **Flow Calibration**.

```
FLOW SENSOR CAL:
>ZERO                    200
 SPAN                 1.0000
 SET DEFAULTS

 RANGE  AVG  DIAGS ALARM
```

Calibrate Flow Zero

The Calibrate Flow Zero screen calibrates the flow sensor at zero flow.

Note The pump must be disconnected before performing the zero calibration. ▲

- In the Main Menu, choose Service > Flow Calibration > **Zero**.

```
CALIBRATE FLOW ZERO:
 CURRENTLY:   0.004 LPM
    SET TO:   0.000 LPM ?

   DISCONNECT PUMP AND
   ↵ SAVE CURRENT FLOW

 RANGE  AVG  DIAGS ALARM
```

Calibrate Flow Span

The Calibrate Flow Span screen allows the user to view and set the flow sensor calibration span point.

Note An independent flow sensor is required to read the flow, then the operator enters the flow value on this screen to perform the calibration. ▲

- In the Main Menu, choose Service > Flow Calibration > **Span**.

```
CALIBRATE FLOW SPAN:
 CURRENTLY:   1.000 LPM
    SET TO:   0.803 LPM ?

          ↔ MOVE CURSOR
 ↑↓ CHANGE VALUE   ↵ SAVE

 RANGE  AVG  DIAGS ALARM
```

Restore Default Flow Calibration

The Restore Default Flow Calibration screen allows the user to reset the flow calibration configuration values to factory defaults.

- In the Main Menu, choose Service > Flow Calibration > **Set Defaults**.

```
RESTORE DEFAULT CAL:
                ↵ RESTORE

 RANGE  AVG  DIAGS ALARM
```

```
RESTORE DEFAULT CAL:
                ↵ RESTORE
ARE YOU SURE YOU WANT TO?
PRESS ➡ TO CONFIRM RESTORE

 RANGE  AVG  DIAGS ALARM
```

Input Board Calibration

The Input Board Calibration menu is used to initiate a calibration of the input A/D stages. The input board calibration menu is visible only when the instrument is in service mode. For more information on the service mode, see "Service Mode" earlier in the chapter.

Note This adjustment should only be performed by an instrument service technician. ▲

- In the Main Menu, choose Service > **Input Board Calibration**.

```
INPUT BOARD CALIBRATION:
>MANUAL INPUT CAL
 AUTOMATIC INPUT CAL
 INPUT FREQUENCY DISP

 RANGE  AVG  DIAGS ALARM
```

Manual Input Calibration

The Manual Input Calibration screen is used to do a manual calibration of the input board A/D stages per the following procedure:

Note The measurement system and the PMT are both shut off inside this screen. ▲

1. In the Main Menu, choose Service > Input Board Calibration > **Manual Input Calibration**.

2. Press [↵] to leave warning screen.

3. Make a note of the frequency at gain of 1.

4. Use [←] and [→] to change the gain between 10 and 100.

5. Use [↑] and [↓] to increment or decrement the D/A counts so the frequency at gain 100 is equal to the frequency at gain 1.

6. Press [↵] to save new input board calibration.

```
INPUT BOARD CALIBRATION:
          ↵ TO CALIBRATE
       ** WARNING **
 THIS ACTION MAY REQUIRE
  RECALIBRATION OF THE
ENTIRE MEASUREMENT SYSTEM!

 RANGE  AVG  DIAGS ALARM
```

```
GAIN 1    - MANUAL:
     FREQ =   4500
      D/A =    N/A   ?
ARE YOU SURE YOU WANT TO?
 ←→ CHG GAIN
              ↵ SAVE VALUES

 RANGE  AVG  DIAGS ALARM
```

Automatic Input Calibration

The Automatic Input Calibration screen is used to do an automatic calibration of the input board A/D stages. A message will be displayed after the optimum setting has been determined.

Note The measurement system and the PMT are both shut off inside this screen. ▲

- In the Main Menu, choose Service > Input Board Calibration > **Automatic Input Calibration**.
- Press [↵] to leave warning screen and begin automatic calibration.

```
INPUT BOARD CALIBRATION:
          ↵ TO CALIBRATE
      ** WARNING **
 THIS ACTION MAY REQUIRE
  RECALIBRATION OF THE
ENTIRE MEASUREMENT SYSTEM!

 RANGE  AVG  DIAGS ALARM
```

```
INPUT BOARD CALIBRATION:
    ** IN PROGRESS **
D/A    =   2047
TARGET =      0
FREQ   =      0       0
ZERO   =      0 CNT =  1

 RANGE  AVG  DIAGS ALARM
```

Input Frequency Display

The Input Frequency Display screen is used to manually adjust the input board gain. This may be used as a troubleshooting tool for the input board. The gain setting and test mode are reset upon exiting this screen.

- In the Main Menu, choose Service > Input Board Calibration > **Input Frequency Display**.
- Press [↵] to leave warning screen.
- Use [↑] and [↓] to toggle the test signal and bypass the PMT.
- Use [←] and [→] to change the gain between 1, 10 and 100.

```
INPUT BOARD CALIBRATION:
          ↵ TO CALIBRATE
      ** WARNING **
CONCENTRATION CALCULATION
     IS HALTED INSIDE
       THIS SCREEN!

 RANGE  AVG  DIAGS ALARM
```

```
INPUT GAIN TEST:
    GAIN = 1
    TEST = OFF
    FREQ = 5000
 ←→ CHG GAIN ↑↑ TEST MODE

 RANGE  AVG  DIAGS ALARM
```

Temperature Calibration

The Temperature calibration screen allows the user to view and set the ambient temperature sensor calibration. The temperature calibration is visible only when the instrument is in service mode. For more information on the service mode, see "Service Mode" earlier in the chapter.

Note This adjustment should only be performed by an instrument service technician. ▲

- In the Main Menu, choose Service > **Temperature Calibration**.

```
CALIBRATE AMBIENT TEMP:
 CURRENTLY:      32.3  °C
    SET TO:     032.3  °C ?

          ↔ MOVE CURSOR
 ↑↓ CHANGE VALUE    ↵ SAVE

 RANGE   AVG   DIAGS ALARM
```

Analog Output Calibration

The Analog Output Calibration menu is a selection of 6 voltage channels and 6 current channels (if I/O expansion board option is installed) to calibrate, and allows the user to select the calibration action zero or span. The analog output calibration is visible only when the instrument is in service mode. For more information on the service mode, see "Service Mode" earlier in the chapter.

Note This adjustment should only be performed by an instrument service technician. ▲

- In the Main Menu, choose Service > **Analog Out Calibration**.

```
ANALOG OUTPUT CAL:
>VOLTAGE CHANNEL 1
 VOLTAGE CHANNEL 2
 VOLTAGE CHANNEL 3
 VOLTAGE CHANNEL 4
 VOLTAGE CHANNEL 5
 VOLTAGE CHANNEL 6
 CURRENT CHANNEL 1          ↓

 RANGE   AVG   DIAGS ALARM
```

```
ANALOG OUTPUT CAL:
>CALIBRATE ZERO
 CALIBRATE FULL SCALE




 RANGE   AVG   DIAGS ALARM
```

Analog Output Calibrate Zero

The Analog Output Calibrate Zero screen allows the user to calibrate the zero state of the selected analog output. The operator must connect a meter to the output and adjust the output until it reads 0.0 V on the meter.

- In the Main Menu, choose Service > Analog Out Calibration > Select Channel > **Calibrate Zero**.

```
ANALOG OUTPUT CAL:    ZERO
 CONNECT METER TO OUTPUT!
  SELECTED OUTPUT:      V1
  SET TO:              100
 ↵ SAVE VALUE   ↑↓ INC/DEC
 SET OUTPUT TO:      0.0 V

  RANGE   AVG   DIAGS ALARM
```

Analog Output Calibrate Full-Scale

The Analog Output Calibrate Full-Scale screen allows the user to calibrate the full-scale state of the selected analog output. The operator must connect a meter to the output and adjust output until it reads the value shown in the set output to: field.

- In the Main Menu, choose Service > Analog Out Calibration > Select Channel > **Calibrate Full Scale**.

```
ANALOG OUTPUT CAL:    SPAN
 CONNECT METER TO OUTPUT!
  SELECTED OUTPUT:      V1
  SET TO:             3397
 ↵ SAVE VALUE   ↑↓ INC/DEC
 SET OUTPUT TO:       10 V

  RANGE   AVG   DIAGS ALARM
```

Analog Input Calibration

The Analog Input Calibration menu is a selection of 8 analog inputs (if the I/O expansion board option is installed) to calibrate, and allows the user to select the calibration action zero or span. The analog input calibration is visible only when the instrument is in service mode. For more information on the service mode, see "Service Mode" earlier in the chapter.

Note This adjustment should only be performed by an instrument service technician. ▲

- In the Main Menu, choose Service > **Analog Input Calibration**.

```
ANALOG INPUT CAL:
>INPUT CHANNEL 1
 INPUT CHANNEL 2
 INPUT CHANNEL 3
 INPUT CHANNEL 4
 INPUT CHANNEL 5
 INPUT CHANNEL 6
 INPUT CHANNEL 7        ↓

 RANGE  AVG  DIAGS ALARM
```

```
ANALOG INPUT CAL:
>CALIBRATE ZERO
 CALIBRATE FULL SCALE




 RANGE  AVG  DIAGS ALARM
```

Analog Input Calibrate Zero

The Analog Input Calibrate Zero screen allows the user to calibrate the zero state of the selected analog input.

- In the Main Menu, choose Service > Analog Input Calibration > Select Channel > **Calibrate Zero**. (Hook up a voltage source of 0 V to the analog input channel.)

```
ANALOG INPUT CAL:   ZERO
DISCONNECT SELECTED INPUT!
 SELECTED INPUT:   INPUT1
 CURRENTLY:       6.24 V ?

 ↵ CALIBRATE INPUT TO ZERO

 RANGE  AVG  DIAGS ALARM
```

Analog Input Calibrate Full-Scale

The Analog Input Calibration Full-Scale screen allows the user to calibrate the full-scale state of the selected analog input.

- In the Main Menu, choose Service > Analog Input Calibration > Select Channel > **Calibrate Full Scale**. (Hook up a voltage source of 10 V to the analog input channel.)

```
ANALOG INPUT CAL:    SPAN
PROVIDE VOLTAGE TO INPUT!
 SELECTED INPUT:    INPUT1
 CURRENTLY:         6.24 V
    SET TO:        10.00 V ?
 ↵ CALIBRATE INPUT TO ZERO

 RANGE  AVG  DIAGS ALARM
```

Ozonator Safety

The Ozonator Safety screen is used to turn the ozonator safety feature on or off. If the ozonator safety is turned off, the ozonator will always be on, even if the converter is not up to temperature. The ozonator safety screen is visible only when the instrument is in service mode. For more information on the service mode, see "Service Mode" earlier in the chapter.

- In the Main Menu, choose Service > **Ozonator Safety**.

```
OZONATOR SAFETY:
 CURRENTLY:            ON
    SET TO:           OFF ?

            ↵ TOGGLE VALUE

 RANGE  AVG  DIAGS ALARM
```

Dilution Ratio

The Dilution Ratio screen allows the user to view and set the dilution ratio. Acceptable values are 1–500: 1. The default is 1:1. When this value is set, the dilution ratio is applied to all concentration measurements. This screen is only accessible if the dilution ratio option is installed.

- In the Main Menu, choose Service > **Dilution Ratio**.

```
DILUTION RATIO:
 CURRENTLY:      001.0 :1
    SET TO:      002.0 :1 ?

          ←→ MOVE CURSOR
 ↑↓ CHANGE VALUE    ↵ SAVE

 RANGE  AVG  DIAGS ALARM
```

Display Pixel Test

The Display Pixel Test is used to test the LCD display. The display pixel test is visible only when the instrument is in service mode. For more information on the service mode, see "Service Mode" earlier in the chapter.

- In the Main Menu, choose Service > **Display Pixel Test**.

```
DISPLAY PIXEL TEST:
DURING TEST PRESS 🗐 OR ▶
TO EXIT, ↵ TO TOGGLE

        ↵ BEGIN TEST
        🗐 GO BACK TO MENU

 RANGE  AVG  DIAGS ALARM
```

Restore User Defaults

The Restore User Defaults screen is used to reset the user calibration and configuration values to factory defaults. The restore default user is visible only when the instrument is in service mode. For more information on the service mode, see "Service Mode" earlier in the chapter.

- In the Main Menu, choose Service > **Restore User Defaults**.

```
RESTORE USER DEFAULTS:
                ↵ RESTORE

 RANGE  AVG  DIAGS ALARM
```

```
RESTORE USER DEFAULTS:
                ↵ RESTORE
ARE YOU SURE YOU WANT TO?
PRESS ➡ TO CONFIRM RESTORE

 RANGE  AVG  DIAGS ALARM
```

Password Menu

The Password menu allows the user to configure password protection. If the instrument is locked, none of the settings may be changed via the front panel user interface. The items visible under the password menu are determined by the instrument's password status.

- In the Main Menu, choose **Password**.

```
PASSWORD MENU:
>SET PASSWORD
 LOCK INSTRUMENT
 CHANGE PASSWORD
 REMOVE PASSWORD
 UNLOCK INSTRUMENT


 RANGE  AVG  DIAGS ALARM
```

Set Password

The Set Password screen is used to set the password to unlock the front panel. The set password is shown if the instrument is unlocked and the password is set.

- In the Main Menu, choose Password > **Set Password**

```
ENTER NEW PASSWORD:
          ■

     ABCDEFGHIJKLMN  BKSP
     OPQRSTUVWXYZ    PAGE
     0123456789 ./-  SAVE

 RANGE  AVG  DIAGS ALARM
```

Lock Instrument

The Lock Instrument screen is used to lock the instrument's front panel so users can not change any settings from the front panel. The lock instrument is shown if the instrument is unlocked and the password is set.

- In the Main Menu, choose Password > **Lock Instrument**

```
LOCK FRONT PANEL:
   PRESSING ENTER WILL
PREVENT USER FROM CHANGING
 CONFIG FROM FRONT PANEL
 ↵ LOCK AND RETURN TO RUN


 RANGE  AVG  DIAGS ALARM
```

Change Password

The Change Password is used to change the password used to unlock the instrument's front panel. The change password is shown if the instrument is unlocked.

- In the Main Menu, choose Password > **Change Password**

```
ENTER NEW PASSWORD:
                 
     ABCDEFGHIJKLMN  BKSP
     OPQRSTUVWXYZ    PAGE
     0123456789 ./-  SAVE

 RANGE  AVG  DIAGS ALARM
```

Remove Password

The Remove Password screen is used to erase the current password and disable password protection. The remove password is shown if the instrument is unlocked and the password set.

- In the Main Menu, choose Password > **Remove Password**

```
REMOVE PASSWORD:
   PRESSING ENTER WILL
 REMOVE CURRENT PASSWORD
   AND DISABLE LOCKING
      ↵ REMOVE PASSWORD

 RANGE  AVG  DIAGS ALARM
```

Unlock Instrument

The Unlock Instrument screen is used to enter the password to unlock the front panel. The unlock instrument is shown if the instrument is locked.

- In the Main Menu, choose Password > **Unlock Instrument**

```
ENTER THE PASSWORD:
                 
     ABCDEFGHIJKLMN  BKSP
     OPQRSTUVWXYZ    PAGE
     0123456789 ./-  SAVE

 RANGE  AVG  DIAGS ALARM
```

Chapter 4
Calibration

This chapter describes procedures for performing a multipoint calibration of the Model 42*i* NO_y. The information described here is considered be adequate to perform the calibration. However, if greater detail is desired, the user is referred to the Code of Federal Regulations, Title 40, Part 50, Appendix F.

The calibration technique is based on the rapid gas phase reaction between NO and O_3 which produces stoichiometric quantities of NO_2 in accordance with the reaction:

$$NO + O_3 \rightarrow NO_2 + O_2 + h\nu$$

The quantitative nature of this reaction is such that when the NO concentration is known, the concentration of NO_2 can be determined. Ozone is added to excess NO in a dynamic calibration system, and the NO channel of the chemiluminescence NO-DIF-NO_y analyzer is used as an indicator of changes in NO concentration.

When O_3 is added, the decrease in NO concentration observed on the calibrated NO channel is equivalent to the concentration of NO_2 produced. Adding variable amounts of O_3 from a stable O_3 generator can change the amount of NO_2 generated. The following sections discuss the required apparatus and procedures for calibrating the instrument:

- "Calibration Equipment" on page 4-1
- "Pre-Calibration" on page 4-8
- "Calibration" on page 4-9
- "Calibration in Dual Range and Auto Range Mode" on page 4-16
- "Zero and Span Check" on page 4-21

Calibration Equipment

The following equipment may be used to calibrate the analyzer:

- Zero gas generator
- Gas phase titrator

Note In this chapter NO_2 is used as a surrogate compound for all NO_y species that are required to be converted to NO (NO_2, NO_3, N_2O_5, HNO_2, HNO_3, PAN, organic nitrates and aerosol nitrates). ▲

Zero Gas Generator

A zero air source, such as a Thermo Scientific *Model 111 Zero Air Supply* or *Model 1160 Zero Air Supply*, free of contaminants such as NO, NO_2, and O_3 is required for dilution, calibration, and gas phase titration.

Compression

The zero air source should be at an elevated pressure to allow accurate and reproducible flow control and to aid in subsequent operations such as drying, oxidation, and scrubbing. An air compressor that gives an output of 10 psig is usually sufficient for most applications.

Drying

Several drying methods are available. Passing the compressed air through a bed of silica gel, using a heatless air dryer, or removing water vapor with a permeation dryer are three possible approaches.

Oxidation

NO is usually oxidized to NO_2 in order to ease its scrubbing. Oxidation can be accomplished by either ozonation or chemical contact. During ozonation, the air is passed through an ozone generator. The O_3 that is produced reacts with the NO to form NO_2. Care must be taken to allow sufficient residence time for the ozonation reaction to go to completion.

Chemical oxidation is accomplished by passing the air stream through a reacting bed. Such agents as CrO_3 on an alumina support or Purafil® are very efficient at oxidizing NO to NO_2. The chemical contact approach has the advantage of needing no electrical power input for its application.

Scrubbing

Fixed bed reactors are commonly used in the last step of zero air generation to remove the remaining contaminants by either further reaction or absorption. Table 4-1 lists materials that can be effective in removing contaminants.

Table 4–1. Scrubbing Materials

To Remove	Use
NO_2	Soda-Lime (6-12 mesh), Purafil
Hydrocarbons	Molecular Sieve (4A), Activated Charcoal
O_3 and SO_2	Activated Charcoal

Gas Phase Titrator

A gas phase titrator (GPT), such as is included in the Thermo Scientific Model 146 Series Multigas Calibration System is used to generate NO_2 concentrations from NO concentrations. NO_2 is one of the the major components of NO_y. Figure 4-1 shows the suggested placement of the component parts of a gas phase titration apparatus.

Equipment Damage All connections between components in the system should be made with glass, Teflon®, or other non-reactive material. ▲

Flow Controllers

The airflow controllers should be devices capable of maintaining constant airflows within ±2% of the required flow rate. The NO flow controller should be capable of maintaining constant NO flows within ±2% of the required flow rate.

Pressure Regulator

The pressure regulator for the standard NO cylinder must have a non-reactive diaphragm and internal parts, and a suitable delivery pressure.

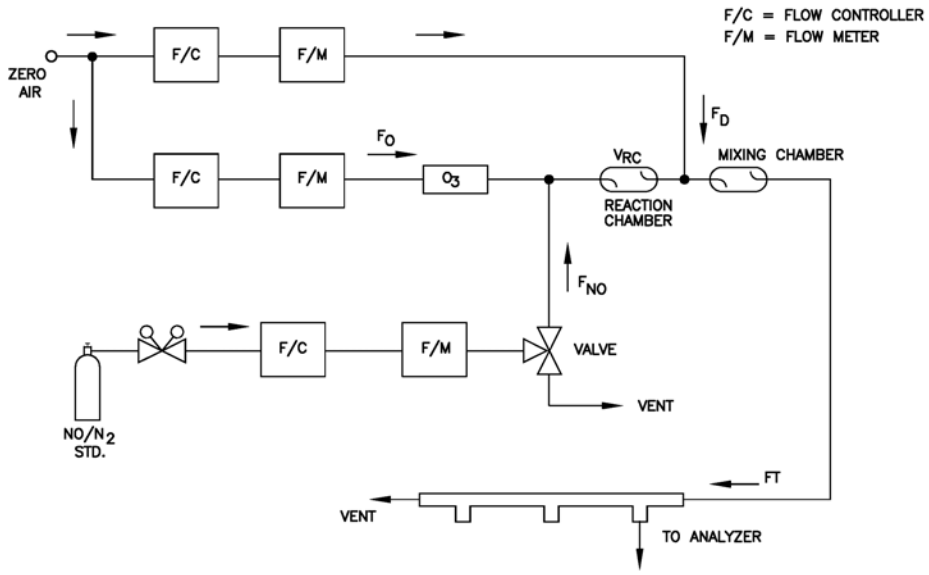

Figure 4–1. GPT System

Ozone Generator

The ozone generator must be capable of generating sufficient and stable levels of ozone for reaction with NO to generate NO_2 concentrations in the range required.

Note Ozone generators of the electric discharge type may produce NO and NO_2 and are not recommended. ▲

Diverter Valve

A valve can be used to divert the NO flow when zero air is required at the manifold.

Reaction Chamber

The reaction chamber used for the reaction of ozone with excess NO should have sufficient volume so that the residence time meets the requirements specified in this chapter.

Mixing Chamber

The mixing chamber is used to provide thorough mixing of the reaction products and diluent air.

Output Manifold

The output manifold should be of sufficient diameter to insure an insignificant pressure drop at the analyzer connection. The system must have a vent designed to insure atmospheric pressure at the manifold and to prevent ambient air from entering the manifold.

Reagents

The following information describes the NO concentration standard and the method for calculating the NO concentration standard and the NO_2 impurity.

NO Concentration Standard

A cylinder containing 10 to 50 ppm NO in N_2 with less than 1 ppm NO_2 is usually used as the concentration standard. The cylinder must be traceable to a National Institute of Standards and Technology (NIST) NO in N_2 Standard Reference Material or NO_2 Standard Reference Material.

Procedures for certifying the NO cylinder (working standard) against an NIST traceable NO or NO_2 standard and for determining the amount of NO_2 impurity are given in EPA Publication No. EPA-600/4-75-003, “Technical Assistance Document for the Chemiluminescence Measurement of Nitrogen Dioxide.”

In addition, the procedure for the certification of a NO working standard against an NIST traceable NO standard and determination of the amount of NO_2 impurity in the working standard is reproduced here. The cylinder should be re-certified on a regular basis as determined by the local quality control program.

Use the NIST traceable NO standard and the GPT calibration procedure to calibrate the NO, NO_y, and NO_2 responses of the instrument. Also determine the converter efficiency of the analyzer. Refer to the calibration procedure in this manual and in the Code of Federal Regulations, Title 40, Part 50, Appendix F for exact details. Ignore the recommended zero offset adjustments.

Assaying a Working NO Standard Against a NIST-traceable NO Standard

Use the following procedure to calculate the NO concentration standard and NO_2 impurity.

1. Generate several NO concentrations by dilution of the NO working standard.

2. Use the nominal NO concentration, $[NO]_{NOM}$, to calculate the diluted concentrations.

3. Plot the analyzer NO response (in ppm) versus the nominal diluted NO concentration and determine the slope, S_{NOM}.

4. Calculate the [NO] concentration of the working standard, $[NO]_{STD}$, from:

$$[NO]_{STD} = [NO]_{NOM} \times S_{NOM}$$

5. If the nominal NO concentration of the working standard is unknown, generate several NO concentrations to give on-scale NO responses.

6. Measure and record F_{NO} and F_T for each NO concentration generated.

7. Plot the analyzer NO response versus F_{NO}/F_T and determine the slope which gives $[NO]_{STD}$ directly. The analyzer NO_y responses to the generated NO concentrations reflect any NO_2 impurity in the NO working standard.

8. Plot the difference between the analyzer NO_y and NO responses versus F_{NO}/F_T. The slope of this plot is $[NO_2]_{IMP}$.

Zero Air

A source of zero air free of contaminants should be used as described earlier in this chapter. Contaminants can cause a detectable response on the instrument and may also react with the NO, O_3, or NO_2 during the gas phase titration.

Dynamic Parameter Specifications for Gas Titrator

Use the following definitions for the remainder of this chapter.

P_R =	Dynamic parameter specification to ensure complete reaction of the available O_3, ppm-min
$[NO]_{RC}$ =	NO concentration in the reaction chamber, ppm
t_R =	residence time of the reactant gases in the reaction chamber, min
$[NO]_{STD}$ =	Concentration of the undiluted NO standard, ppm
F_{NO} =	NO flow rate, sccm
F_O =	O_3 generator air flow rate, sccm
V_{RC} =	Volume of the reaction chamber, cc
F_T =	Analyzer demand plus 10 to 50% excess

The O_3 generator (ozonator) airflow rate and the NO flow rate must be adjusted such that the following relationships hold:

$$P_R = [NO]_{RC} \text{ x } t_R \geq 2.75 \text{ ppm - min}$$

$$[NO]_{RC} = [NO]_{STD} \frac{F_{NO}}{(F_O + F_{NO})}$$

$$t_R = \frac{V_{RC}}{F_O + F_{NO}} < 2 \text{ min}$$

Determining GPT System Flow Conditions

Use the following procedure to determine the flow conditions to be used in the GPT system.

1. Determine F_T, the total flow required at the output manifold, which should be equal to the analyzer demand plus 10 to 50 percent excess.

2. Establish $[NO]_{OUT}$ as the highest NO concentration that will be required at the output manifold. $[NO]_{OUT}$ should be about equal to 90% of the upper range limit (URL) of the NO_2 concentration range to be covered.

3. Determine F_{NO} as:

$$F_{NO} = \frac{[NO]_{OUT} \times F_T}{[NO]_{STD}}$$

4. Select a convenient or available reaction chamber volume. Initially a trial volume may be selected in the range of 200 to 500 cc.

5. Compute F_O as:

$$F_O = \sqrt{\frac{[NO]_{STD} \times F_{NO} \times V_{RC}}{2.75}} - F_{NO}$$

6. Compute t_R as:

$$t_R = \frac{V_{RC}}{F_O + F_{NO}}$$

7. Verify that $t_R < 2$ minutes. If not, select a reaction chamber with a smaller V_{RC}.

8. Compute the diluent air flow rate as:

$$F_D = F_T - F_O - F_{NO}$$

9. If F_O turns out to be impractical for the desired system, select a reaction chamber having a different V_{RC} and recompute F_D and F_O.

Pre-Calibration

Perform the following pre-calibration procedure before calibrating the Model 42*i* NO_y. For detailed information about the menu parameters and the icons used in these procedures, see the "Operation" chapter.

Note The calibration and calibration check duration times should be long enough to account for the transition (purge) process when switching from sample to zero and from zero to span. This transition time is the time required to purge the existing air. ▲

Depending on the plumbing configuration and the instrument, data from approximately the first minute of a zero calibration or check should be disregarded because of residual sample air. Also, data from approximately the first minute of a span calibration or check should be disregarded because the span is mixing with the residual zero air. ▲

1. Allow the instrument to warm up and stabilize.

2. Be sure the ozonator is ON. If the ozonator is not ON:
   a. Press [■] to display the Main Menu, then choose Instrument Controls > **Ozonator**.
   b. Press [↵] to toggle the ozonator ON.
   c. Press [▶] to return to the Run screen.

3. Be sure the instrument is in the auto mode, that is, NO, DIF, and NO_y measurements are being displayed on the front panel display. If the instrument is not in auto mode:
   a. Press [■] to display the Main Menu, then choose Instrument Controls > **Auto/Manual Mode**.
   b. Select **NO/NO_y**, and press [↵].
   c. Press [▶] to return to the Run screen.

4. Select NO, DIF, and NO_y ranges, and push the AVG soft key to display the Averaging Time screen. It is recommended that a higher averaging time be used for best results. For more information about the ranges or averaging time, see the "Operation" chapter.

Note The averaging time should be less than the zero duration and less than the span duration. ▲

5. Set the calibration pressure to the current reactor pressure.
   a. Press [ ], choose > Calibration Factors > **Cal Pressure**.
   b. Use [↑] [↓] to increment/decrement the value to match the current reactor pressure, and press [↵] to save the new calibration pressure value.

6. Verify that any filters used during normal monitoring are also used during calibration.

7. If required, connect the analog/digital outputs to a strip chart recorder(s) or PC(s).

Calibration

The following procedure calibrates the analyzer using the gas phase titrator and zero gas generator described previously in this manual. It is suggested that a calibration curve have at least seven points between the zero and full scale NO concentrations. Although the seven-point curve is optional, two of whatever number of points is chosen should be located at the zero and 90% levels and the remaining points equally spaced between these values.

Note When the instrument is equipped with internal zero/span and sample valves, the ZERO and SPAN ports should give identical responses to the SAMPLE port when test gases are introduced. The user should calibrate the instrument using the SAMPLE port to introduce the zero and span gas sources. ▲

After calibration, the zero and span sources should be plumbed to the appropriate ports on the rear panel of the instrument, and then reintroduced to the instrument. The instrument should give identical responses to the test gases whether they are introduced via the SAMPLE port or the ZERO or SPAN ports. If not, the plumbing and/or valves should be serviced.

Connect GPT Apparatus to the Analyzer

Use the following procedure to connect the GPT apparatus to the analyzer.

1. Assemble a dynamic calibration system such as the one shown in Figure 4–1.

2. Ensure that all flow meters are calibrated under the conditions of use against a reliable standard, such as a soap-bubble meter or wet-test meter. All volumetric flow rates should be corrected to 25 °C and 760 mmHg.

3. Precautions should be taken to remove O_2 and other contaminants from the NO pressure regulator and delivery system prior to the start of calibration to avoid any conversion of NO to NO_2. Failure to do so can cause significant errors in calibration. This problem can be minimized by:

   a. Carefully evacuating the regulator after the regulator has been connected to the cylinder and before opening the cylinder valve.

   b. Thoroughly flushing the regulator and delivery system with NO after opening the cylinder valve.

   c. Not removing the regulator from the cylinder between calibrations unless absolutely necessary.

4. Connect the analyzer sample bulkhead input to the output of the GPT system.

Adjust Instrument Gain

Use the following procedure to adjust the instrument gain. This includes:

- Setting the Prereactor, NO and NO_y backgrounds to zero
- Calibrating the NO channel to the NO calibration gas
- Calibrating the NO_y channel to the NO_y calibration gas

Set Backgrounds to Zero

The Prereactor, NO and NO_y background corrections are determined during zero calibration. The background signal is the combination of electrical offsets, PMT dark current, and trace substances undergoing chemiluminescence. For more detailed information, see "NO, NOy, and Prereactor Backgrounds" in the "Operation" chapter.

Use the following procedure to set the prereactor background. Both the NO and NO_y background screens operate the same way, and the following procedure also applies to the NO and NO_y background screen.

Note The Prereactor channel should be calibrated first and then calibrate the NO channel, then the NO_y channel. ▲

For detailed information about the menu parameters and the icons used in these procedures, see the "Operation" chapter.

1. Determine the GPT flow conditions required to meet the dynamic parameter specifications as indicated in "Dynamic Parameter Specifications for Gas Titrator" earlier in this chapter.

2. Adjust the GPT diluent air and O_3 generator air flows to obtain the flows determined in "Dynamic Parameter Specifications for Gas Phase Titrator" earlier in this chapter. The total GPT airflow must exceed the total demand of the analyzer. The Model 42*i* NO_y requires approximately 1 liter/min of sample flow, and a total GPT airflow of at least 2.5 liters/min is recommended.

   a. Allow the analyzer to sample zero air until the NO, NO_y, and DIF responses stabilize.

   b. After the responses have stabilized, from the Main Menu, choose Calibration > **Cal Prereactor Zero**.

   c. Press [↵] to set the zero concentration reading to zero.

   d. Press [■] to return to the Calibration menu and repeat this procedure to set the NO and NO_y background to zero.

   e. Record the stable zero air responses as Z_{NO}, Z_{NOY}, and Z_{DIF} (recorder response, percent scale).

3. Adjust the NO flow from the standard NO cylinder to generate a NO concentration of about 80% of the upper range limit (URL) of the NO range. The exact NO concentration is calculated from:

$$[NO]_{OUT} = \frac{F_{NO} \times NO_{STD}}{F_{NO} + F_O + F_D}$$

Where:

$[NO]_{OUT}$ = Diluted NO concentration at the output manifold, ppm

NO_{STD} = No feed concentration

F_{NO} = No flow

F_O = Ozone flow

F_D = Dilution flow

Calibrate the NO Channel to the NO Calibration Gas

Use the following procedure to calibrate the NO channel to the NO calibration gas.

1. Allow the analyzer to sample the NO calibration gas until the NO, DIF, and NO_y readings have stabilized.

2. When the responses stabilize, from the Main Menu, choose Calibration > **Cal NO Coefficient**.

   The NO line of the Calibrate NO screen displays the current NO concentration. The SPAN CONC line of the display is where you enter the NO calibration gas concentration.

   Use [←] [→] to move the cursor left and right and use [↑] [↓] to increment and decrement the numeric character at the cursor.

3. Press [↵] to calculate and save the new NO coefficient based on the entered span concentration.

   The NO recorder response will equal:

$$\text{Recorder Response (\% scale)} = \frac{[NO]_{OUT}}{URL} \times 100 + Z_{NO}$$

   Where:

   URL = Nominal upper range limit of the NO channel, ppm

4. Record the $[NO]_{OUT}$ concentration and the analyzer NO response as indicated by the recorder response.

Calibrate the NO_y Channel to the NO_y Calibration Gas

Use the following procedure to calibrate the NO_y channel to the NO_y calibration gas.

1. Press [■] to return to the Calibration menu, and choose **Cal NOy Coefficient**.

2. Verify that the NO_y calibration gas concentration is the same as the NO calibration gas concentration plus any known NO_2 impurity (the assumption is that any NO_y impurity is primarily NO_2).

The NO_y line of the Calibrate NO_y screen displays the current NO_y concentration. The SPAN CONC line of the display is where you enter the NO_y calibration gas concentration.

Use [←] [→] to move the cursor left and right and use [↑] [↓] to increment and decrement the numeric character at the cursor.

3. Press [↵] to calculate and save the new NO_y coefficient based on the entered span concentration.

4. Press [▸] to return to the Run screen. The exact NO_y concentration is calculated from:

$$[NO_y]_{OUT} = \frac{F_{NO} \times ([NO]_{STD} + [NO_2]_{IMP})}{F_{NO} + F_O + F_D}$$

Where:

$[NO_y]_{OUT}$ = diluted NO_y concentration at the output manifold, ppm

$[NO_2]_{IMP}$ = concentration of NO_2 impurity in the standard NO cylinder, ppm

The NO_y recorder response will equal:

$$\text{Recorder Response (\% scale)} = \frac{[NO_y]_{OUT}}{URL} \times 100 + Z_{NO_x}$$

Where:

URL = Nominal upper range limit of the NO_y channel, ppm

5. Record the NO_y concentration and the analyzer's NO_y response.

Preparing NO, NO_y, and DIF Calibration Curves

Use the following procedures to prepare the NO, NO_y, and DIF calibration curves.

1. Generate several additional NO and NO_y concentrations by decreasing F_{NO} or increasing F_D.

2. For each concentration generated, calculate the exact NO and NO_y concentrations using the above equations for $[NO]_{OUT}$ and $[NO_y]_{OUT}$.

3. Record the NO and NO_y responses.

4. Plot the analyzer responses versus the respective calculated NO and NO_y concentrations and draw or calculate the respective calibration curves. For subsequent calibrations where linearity can be assumed, these curves may be checked with a three-point calibration consisting of a zero point, NO and NO_y concentrations of approximately 80% of the URL, and an intermediate concentration.

5. Sample this NO concentration until the NO and NO_y responses have stabilized, then measure and record the NO concentration as $[NO]_{ORIG}$.

6. Adjust the GPT system to generate a NO concentration near 90% of the URL of the instrument range selected.

7. Adjust the O_3 generator in the GPT system to generate sufficient O_3 to produce a decrease in the NO concentration equivalent to about 80% of the URL of the DIF range. The decrease must not exceed 90% of the NO concentration determined in Steps 5 and 6 above.

8. When the analyzer responses stabilize, record the resultant NO concentrations as $[NO]_{REM}$.

9. From the Main Menu choose Calibration > **Cal DIF Coefficient**.

   The DIF line of the Calibrate DIF screen displays the current DIF concentration. The SPAN CONC line of the display is where you enter the DIF calibration gas concentration. Note that NO_2 is being used as the DIF component.

10. Set the NO_2 calibration gas concentration to reflect the sum of the following: the NO_2 concentration generated by GPT, ($[NO]_{ORIG}$ - $[NO]_{REM}$), and any NO_2 impurity.

    Use ← → to move the cursor left and right and use ↑ ↓ to increment and decrement the numeric character at the cursor.

$$[NO_2]_{OUT} = ([NO]_{ORIG} - [NO]_{REM}) + \frac{F_{NO} \times [NO_2]_{IMP}}{F_{NO} + F_O + F_D}$$

Where:

$[NO_2]_{OUT}$ = diluted NO_2 concentration at the output manifold, ppm

$[NO]_{ORIG}$ = original NO concentration, prior to addition of O_3, ppm

$[NO]_{REM}$ = NO concentration remaining after addition of O_3, ppm

11. Press [↵] to calculate and save the new DIF coefficient based on the entered span concentration.

    The analyzer does a one point DIF span coefficient calculation, corrects the DIF reading for converter inefficiency, and then adds the corrected DIF to the NO signal to give a corrected NO_y signal.

    If the analyzer calculates a DIF span coefficient of less than 0.96, either the entered DIF concentration is incorrect, the converter is not being heated to the proper temperature, the instrument needs servicing (leak or imbalance), or the converter needs replacement or servicing. The DIF analog output will reflect the NO_2 concentration generated by GPT, any NO_2 impurity, and the NO_2 zero offset.

    The recorder response will be as follows:

$$\text{Recorder Response (\% scale)} = \frac{[NO_2]_{OUT}}{URL} \times 100 + Z_{NO_2}$$

    Where:

    URL = Nominal upper range limit of the DIF channel, ppm

12. Record the DIF concentration and the analyzer's DIF response.

13. Maintaining the same F_{NO}, F_O, and F_D, adjust the ozone generator to obtain several other concentrations of NO_2 over the DIF range (at least five evenly spaced points across the remaining scale are suggested).

14. Record the stable responses and plot the analyzer's DIF responses versus the corresponding calculated (using the above equation for $[NO_2]_{OUT}$) concentrations and draw or calculate the DIF calibration curve.

Note It is important that the curve be linear within ±1% FS over the DIF range. If the curve is nonlinear, the analyzer is not operating correctly, (possible leak, or converter failure, etc.), and should be serviced. Assuming the curve is linear, subsequent data should be reduced using this DIF calibration curve response. ▲

Using the Calibration Factors menu can change the calibration factors. This is often useful in a troubleshooting situation. However, after the above calibration procedure is completed, all subsequent data reduction depends on the calibration parameters, remaining the same as during the initial calibration. ▲

Therefore, never change any calibration factor without first recording the value so that after any troubleshooting procedure is completed, the initial value can be re-entered thereby not altering the multipoint calibration. ▲

Alternative Calibration Procedure Using NO_2 Permeation Tube

Although it is recommended that a GPT system be used to calibrate the analyzer, the procedure described in the Code of Federal Regulations, Title 40, Part 50, Appendix F using a NO_2 permeation tube may be used as an alternative procedure for calibrating the instrument.

Calibration in Dual Range and Auto Range Mode

The dual/auto range calibration feature is used to calibrate the analyzer at two different span levels (as opposed to a single span level in the standard mode) generating a “tailored multi-point” calibration curve stored in the analyzer's memory. This feature may be used:

- When widely different gas levels are being monitored, such as a factor of 10 or greater apart
- If precision and span levels are being introduced using separate tanks
- If more than one multi-component cylinder is being used to calibrate the instrument

Properly designed chemiluminescence analyzers are inherently linear over a wide dynamic range; and under normal USEPA compliance situations this feature is not required. Dual calibration may be used for span levels less than a factor of 10 apart, however if this is done to correct for a significant non-linearity, it may mask the problems causing the effect, such as, bad calibration cylinder, leaks in sampling lines, or low ozonator output.

Use the following procedures to calibrate the analyzer in dual or auto range mode.

Set Background Readings to Zero

Use the following procedure to set the prereactor background reading to zero. Both the NO background and NO_y background screens operate the same way, and the following procedure also applies to the NO and NO_y background screen.

Note The Prereactor channel should be calibrated first and then calibrate the NO channel, then the NO_y channel. ▲

For detailed information about the menu parameters and the icons used in these procedures, see the "Operation" chapter.

1. Follow the "Pre-Calibration" procedure described previously in this chapter.

2. Introduce zero air to the SAMPLE bulkhead and allow the analyzer to sample zero air until the NO, NO_y, and DIF responses stabilize.

3. When the responses stabilize, from the Main Menu choose Calibration > **Cal Prereactor Zero**.

4. The Prereactor Background screen displays the current prereactor background and zero concentration.

5. Press [↵] to set the zero background to zero.

6. Press [▸] to return to the Run screen.

7. Repeat Steps 3 through 6, selecting **Cal NO Background** or **Cal NOy Background** to set the NO and NO_y backgrounds to zero.

Calibrate Low NO

Use the following procedure to calibrate NO channel to the NO calibration gas.

1. Disconnect the source of zero air from the SAMPLE bulkhead. In its place, connect a source of NO calibration gas of about 80% of the low NO full-scale range.

2. Allow the analyzer to sample the low NO calibration gas until the NO, DIF, and NO_y readings stabilize.

3. When the responses are stabile, from the Main Menu choose Calibration > **Cal Lo NO Coefficient**.

4. The Lo NO field displays the current NO concentration.

The Lo NO Span Conc field is where you enter the low NO calibration gas concentration.

Use [←] [→] to move the cursor left and right and use [↑] [↓] to increment and decrement the numeric character at the cursor.

5. Press [↵] to calculate and save the new low NO coefficient based on the entered span concentration.

Calibrate Low NO_y

Use the following procedure to calibrate the NO_y channel to the NO_y calibration gas.

1. Press [■] to return to the Calibration menu and choose **Cal Lo NOy Coefficient**.

2. Verify that the low NO_y calibration gas concentration is the same as the low NO calibration gas concentration plus any known NO_2 impurity (the assumption is that any NO_y impurity is primarily NO_2).

   The Lo NO_y field displays the current NO_y concentration. The Lo NO_y Span Conc field is where you enter the low NO_y calibration gas concentration.

   Use [←] [→] to move the cursor left and right and use [↑] [↓] to increment and decrement the numeric character at the cursor.

3. Press [↵] to calculate and save the new low NO_y coefficient based on the entered span concentration.

4. Press [▶] to return to the Run screen.

Calibrate Low DIF

Use the following procedure to calibrate the DIF channel to the DIF calibration gas.

1. Adjust the O_3 generator in the GPT system to generate sufficient O_3 to produce a decrease in the low NO concentration equivalent to about 80% of the URL of the low DIF range. The decrease must not exceed 90% of the low NO concentration determined in the "Calibrate Low NOy" procedure.

2. From the Main Menu choose Calibration > **Cal Lo DIF Coefficient**.

The Lo DIF field displays the current DIF concentration. The Lo DIF Span Conc field is where you enter the Lo DIF calibration gas concentration. Note that NO_2 is being used as the DIF component.

3. Set the low NO_2 calibration gas concentration to reflect the sum of the NO_2 concentration generated by GPT and any NO_2 impurity (the assumption is that any NO_y impurity is primarily NO_2).

   Use ← → to move the cursor left and right and use ↑ ↓ to increment and decrement the numeric character at the cursor.

4. Press ↵ to calculate and save the new low DIF coefficient based on the entered span concentration.

Calibrate High NO

Use the following procedure to calibrate the NO channel to the NO calibration gas.

1. Connect a source of high NO calibration gas of about 80% of the high NO full-scale range. Allow the analyzer to sample the high NO calibration gas until the NO, NO_y, and DIF readings have stabilized.

2. After the responses have stabilized, from the Main Menu, choose Calibration > **Cal Hi NO Coefficient**.

   The Hi NO field displays the current NO concentration. The Hi NO Span Conc field is where you enter the high NO calibration gas concentration.

   Use ← → to move the cursor left and right and use ↑ ↓ to increment and decrement the numeric character at the cursor.

3. Press ↵ to calculate and save the new high NO coefficient based on the entered span concentration.

Calibrate High NO_y

Use the following procedure to calibrate the NO_y channel to the NO_y calibration gas.

1. Press ■ to return to the Calibration menu, and choose **Cal Hi NOy Coefficient**.

2. Verify that the high NO_y calibration gas concentration is the same as the high NO calibration gas concentration plus any known NO_2 impurity (the assumption is that any NO_y impurity is primarily NO_2).

   Use [←] [→] to move the cursor left and right and use [↑] [↓] to increment and decrement the numeric character at the cursor.

3. Press [↵] to calculate and save the new high NO_y coefficient based on the entered span concentration.

4. Press [▸] to return to the Run screen.

Calibrate High DIF

Use the following procedure to calibrate the DIF channel to the DIF calibration gas.

1. Adjust the O_3 generator in the GPT system to generate sufficient O_3 to produce a decrease in the high NO concentration equivalent to about 80% of the URL of the high DIF range. The decrease must not exceed 90% of the high NO concentration determined in the "Calibrate High NOy" procedure.

2. From the Main Menu, choose Calibration > **Cal Hi DIF Coefficient**.

   The Hi DIF field displays the current DIF concentration. The Hi NO_2 Span Conc field is where you enter the high NO_2 calibration gas concentration. Note that NO_2 is being used as the DIF component.

3. Set the high NO_2 calibration gas concentration to reflect the sum of the NO_2 concentration generated by GPT and any NO_2 impurity.

   Use [←] [→] to move the cursor left and right and use [↑] [↓] to increment and decrement the numeric character at the cursor.

4. Press [↵] to calculate and save the new high DIF coefficient based on the entered span concentration.

You can change the calibration factors by using the Calibration Factors menu. This is often useful in a troubleshooting situation. However, after the above calibration procedure is completed, all subsequent data reduction depends on the calibration parameters remaining the same as during the initial calibration.

Therefore never change any calibration factor without first recording the value so that after any troubleshooting procedure is completed, the initial value can be re-entered thereby not altering the multipoint calibration.

Zero and Span Check

The analyzer requires initial and periodic calibration according to the procedures outlined in this manual. Initially, the frequency of the calibration procedure should be determined by the stability of the zero and span checks, which may be run daily. You should generate a new calibration curve when zero and span checks indicate a shift in instrument gain of more than 10 percent from that determined during the most recent multipoint calibration. You can adjust the frequency of calibration and even zero and span checks appropriately as you gain confidence with the instrument.

You should have a quality control plan where the frequency and the number of points required for calibration can be modified on the basis of calibration and zero and span check data collected over a period of time. Note however, that the EPA requires a minimum of one multipoint calibration per calendar quarter. Such a quality control program is essential to ascertain the accuracy and reliability of the air quality data collected and to alert the user if the accuracy or reliability of the data should become unacceptable. A compilation of this kind might include items such as dates of calibration, atmospheric conditions, calibration factors, and other pertinent data.

Use the following procedure to perform a zero and span check.

1. Connect the zero gas to the SAMPLE bulkhead in a standard instrument or to the ZERO bulkhead in a Model 42*i* NO_y equipped with the zero/span and sample solenoid valve option.

2. Allow the instrument to sample zero gas until a stable reading is obtained on the NO, DIF, and NO_y channels then record the zero readings. Unless the zero has changed by more than ±0.010 ppm, it is recommended that the zero not be adjusted. If an adjustment larger than this is indicated due to a change in zero reading, a new multipoint calibration curve should be generated.

3. Attach a supply of known concentration of NO and NO_2 (usually generated via an NIST traceable NO working standard and a GPT system) to the SAMPLE bulkhead (or SPAN bulkhead for instruments equipped with the zero/span and sample solenoid valve option) on the rear panel.

4. Allow the instrument to sample the calibration gas until a stable reading is obtained on the NO, DIF, and NO_y channels. If the calibration has changed by more than ±10%, a new multipoint calibration curve should be generated.

5. When the calibration check has been completed, record the NO, DIF, and NO_y values.

6. Reconnect the analyzer sample line to the SAMPLE bulkhead.

Chapter 5
Preventative Maintenance

This chapter describes the periodic maintenance procedures that should be performed on the instrument to ensure proper operation. Since usage and environmental conditions vary greatly, you should inspect the components frequently until an appropriate maintenance schedule is determined.

This chapter includes the following maintenance information and replacement procedures:

- "Safety Precautions" on page 5-1
- "Replacement Parts" on page 5-2
- "Cleaning the Outside Case" on page 5-2
- "Ozonator Air Feed Drying Column Replacement" on page 5-2
- "Sample Filters Inspection and Replacement" on page 5-2
- "Capillaries Inspection and Replacement" on page 5-3
- "Bypass Pump Capillaries Inspection and Replacement" on page 5-4
- "Thermoelectric Cooler Fins Inspection and Cleaning" on page 5-6
- "Fan Filters Inspection and Cleaning" on page 5-6
- "Leak Test" on page 5-7
- "Pump Rebuilding" on page 5-7
- "Bypass Pump Rebuilding" on page 5-10

Safety Precautions

Read the safety precautions before beginning any procedures in this chapter.

WARNING If the equipment is operated in a manner not specified by the manufacturer, the protection provided by the equipment may be impaired Do not attempt to lift the instrument by the cover or other external fittings. ▲

Equipment Damage Some internal components can be damaged by small amounts of static electricity. A properly grounded antistatic wrist strap must be worn while handling any internal component. For more information about appropriate safety precautions, see the "Servicing" chapter. ▲

Replacement Parts

See the "Servicing" chapter for a list of replacement parts.

Cleaning the Outside Case

Clean the outside case using a damp cloth being careful not to damage the labels on the case.

Equipment Damage Do not use solvents or other cleaning products to clean the outside case. ▲

Ozonator Air Feed Drying Column Replacement

Use the following procedure to replace the ozonator air feed drying column.

1. Remove the drying column from the connector DRY AIR bulkhead on the rear panel of the instrument.
2. Replace spent absorbent material (indicating Drierite or silica gel) with new or regenerated material.
3. Reinstall the drying column to the DRY AIR bulkhead.
4. Perform a Zero/Span check (see the "Calibration" chapter).

Sample Filters Inspection and Replacement

Teflon particulate filters should be inspected regularly and, if necessary, replaced. A filter that does not interact with NO or NO_2 in air should be employed. A suitable filter should have a 5 (or 2) micron pore size. The filter should be replaced on a regular maintenance schedule to prevent the absorption of sample gas by trapped material on the filter. Initially, the filter should be inspected more frequently unitl an appropriate maintenance schedule is determined. Perform a zero/span check after filter replacement (see the "Calibration" chapter).

Capillaries Inspection and Replacement

The capillaries normally only require inspection when instrument performance indicates that there may be a flow problem.

Equipment Damage Some internal components can be damaged by small amounts of static electricity. A properly grounded antistatic wrist strap must be worn while handling any internal component. For more information about appropriate safety precautions, see the "Servicing" chapter. ▲

Use the following procedure to inspect and replace the capillaries.

1. Turn the instrument OFF and unplug the power cord.

2. Remove the instrument cover.

3. Locate the capillary holders. See Figure 5–1 and Figure 7–2.

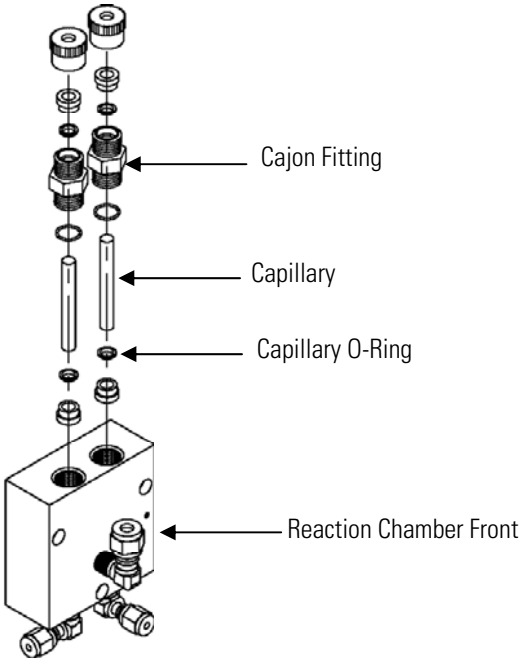

Figure 5–1. Inspecting and Replacing the Capillaries

4. Remove the Cajon® fitting(s) from the reaction chamber body using a 5/8-inch wrench being careful not to lose the ferrule or O-ring.

5. Remove the glass capillaries, ferrule, and O-ring. Inspect O-ring for cuts or abrasion, and replace as necessary.

6. Check capillary for particulate deposits. Clean or replace as necessary.

7. Replace capillary in reaction chamber body, making sure the O-ring is around the capillary before inserting it into the body.

8. Replace Cajon fitting. Note that the Cajon fitting should be tightened slightly more than hand tight.

9. Reconnect tubing to top of fittings, being careful to insert ferrule and O-ring properly, and tighten knurled nut finger tight.

10. Re-install the cover.

11. Connect the power cord and turn the instrument ON.

Bypass Pump Capillaries Inspection and Replacement

The capillaries normally only require inspection when instrument performance indicates that there may be a flow problem.

Equipment Damage Some internal components can be damaged by small amounts of static electricity. A properly grounded antistatic wrist strap must be worn while handling any internal component. For more information about appropriate safety precautions, see the "Servicing" chapter. ▲

Use the following procedure to inspect and replace the capillaries.

1. Turn the instrument OFF and unplug the power cord.

2. Remove the bypass pump housing cover.

3. Locate the capillary holders. See Figure 5–1 and Figure 7–2.

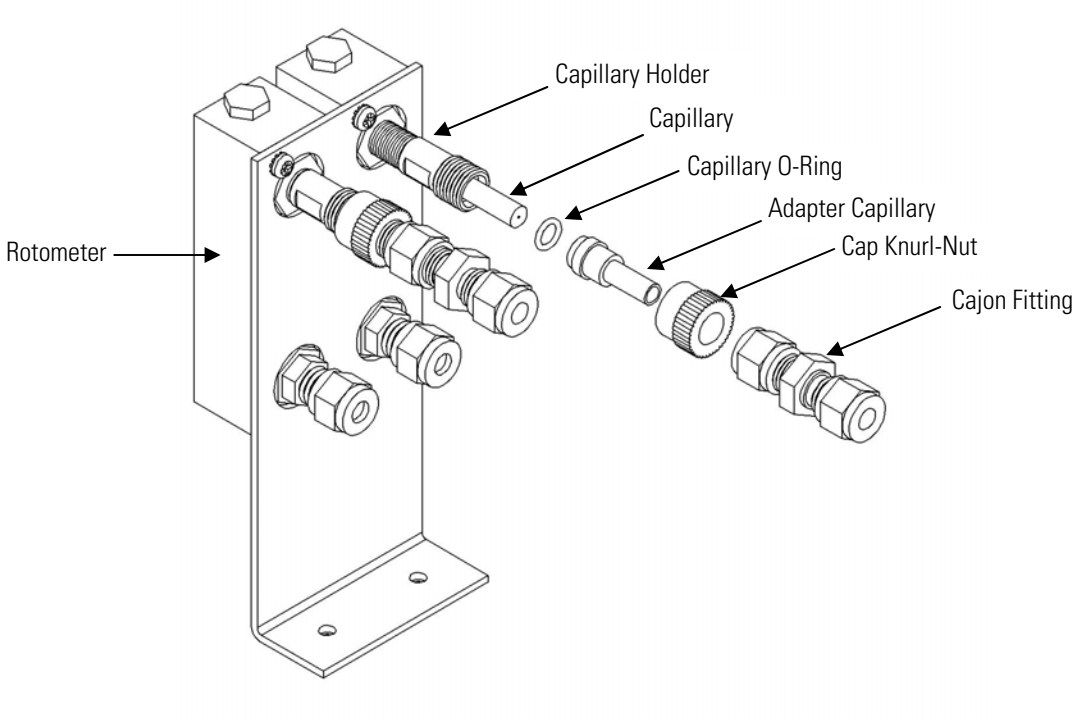

Figure 5–2. Inspecting and Replacing the Bypass Pump Capillaries

4. Remove the Cajon® fitting(s) from the rotometer, being careful not to lose the ferrule or O-ring.

5. Remove the glass capillaries, ferrule, and O-ring. Inspect O-ring for cuts or abrasion, and replace as necessary.

6. Check capillary for particulate deposits. Clean or replace as necessary.

7. Replace capillary in capillary holder body, making sure the O-ring is around the capillary before inserting it into the body.

8. Replace Cajon fitting. Note that the Cajon fitting should be tightened slightly more than hand tight.

9. Re-install the cover.

10. Connect the power cord and turn the instrument ON.

Thermoelectric Cooler Fins Inspection and Cleaning

Use the following procedure to inspect and clean the thermoelectric cooler fins.

Equipment Damage Some internal components can be damaged by small amounts of static electricity. A properly grounded antistatic wrist strap must be worn while handling any internal component. For more information about appropriate safety precautions, see the "Servicing" chapter. ▲

1. Turn the instrument off and unplug the power cord.
2. Remove the instrument cover.
3. Locate the PMT cooler (Figure 7–2 and Figure 7–10).
4. Blow off the cooler fins using clean pressurized air. It may be more convenient to vacuum the cooler fins. In either case, make sure that any particulate accumulation between the fins has been removed.
5. If necessary, use a small brush to remove residual particulate accumulation.
6. Replace the cover.
7. Connect the power cord and turn the instrument ON.

Fan Filters Inspection and Cleaning

Use the following procedure to inspect and clean the fan filters.

1. Remove the two fan guards from the fans and remove the filters.
2. Flush the filters with warm water and let dry (a clean, oil-free purge will help the drying process) or blow the filters clean with compressed air.
3. Re-install the filters and fan guards.

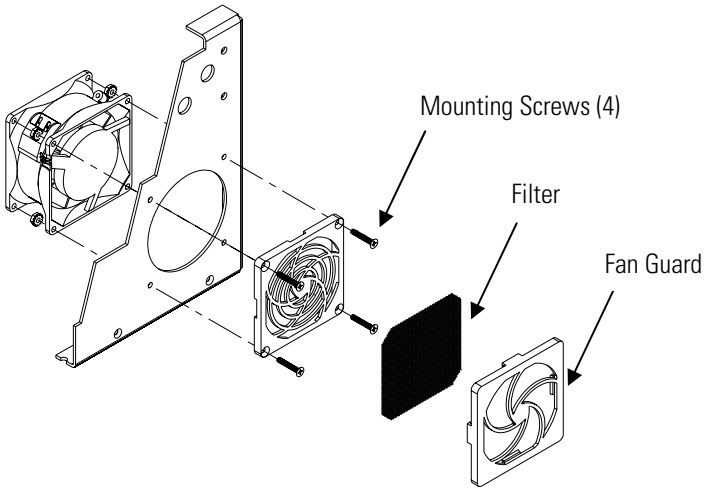

Figure 5–3. Inspecting and Cleaning the Fan Filters

Leak Test

Use the following procedure to perform a leak test.

1. Cap three of the four ports on the rear of panel of the bypass pump with a leak-tight cap, excluding the exhaust port.

2. Connect a suitable vacuum gauge to the fourth port, excuding the exhause port.

3. Turn pump on and the pressure reading on the vacuum guage should drop below 160 mmHg.

If the pump diaphragm is in good condition and the capillarires are not blocked, it should take less than one minute from the time the inlet is plugged to the time the reading below 160 mmHg is obtained.

Pump Rebuilding

Use the following procedure to rebuild the pump (Figure 5–4). To replace the pump, see "Pump Replacement" in the "Servicing" chapter.

Equipment Required:

Pump Repair Kit (two repair kits required per pump)

Allen Wrench, 3 mm and 4 mm

Wrench, 9/16-inch

Needlenose Pliers

Equipment Damage Some internal components can be damaged by small amounts of static electricity. A properly grounded antistatic wrist strap must be worn while handling any internal component. For more information about appropriate safety precautions, see the "Servicing" chapter. ▲

1. Turn instrument off, unplug the power cord, and disconnect the pump plumbing from the instrument.

2. Note the orientation of the pump head top plate for later reassembly. Using a 3 mm Allen wrench, remove the eight socket head screws and washers securing the pump head top plate.

3. Discard the old Teflon gasket.

4. Note the orientation of the diaphragm head for later reassembly. Remove the diaphragm head. Using a 4 mm Allen wrench, remove the four socket head screws securing the diaphragm head to the pump body.

5. Insert the tips of blunt needlenose pliers in the dimples of the clamping disk, then loosen and remove the clamping disk.

6. Remove and discard the old Teflon gasket.

7. Insert the clamping disk into the new Teflon diaphragm (three pieces) and screw the clamping disk into the pump. Do not over tighten.

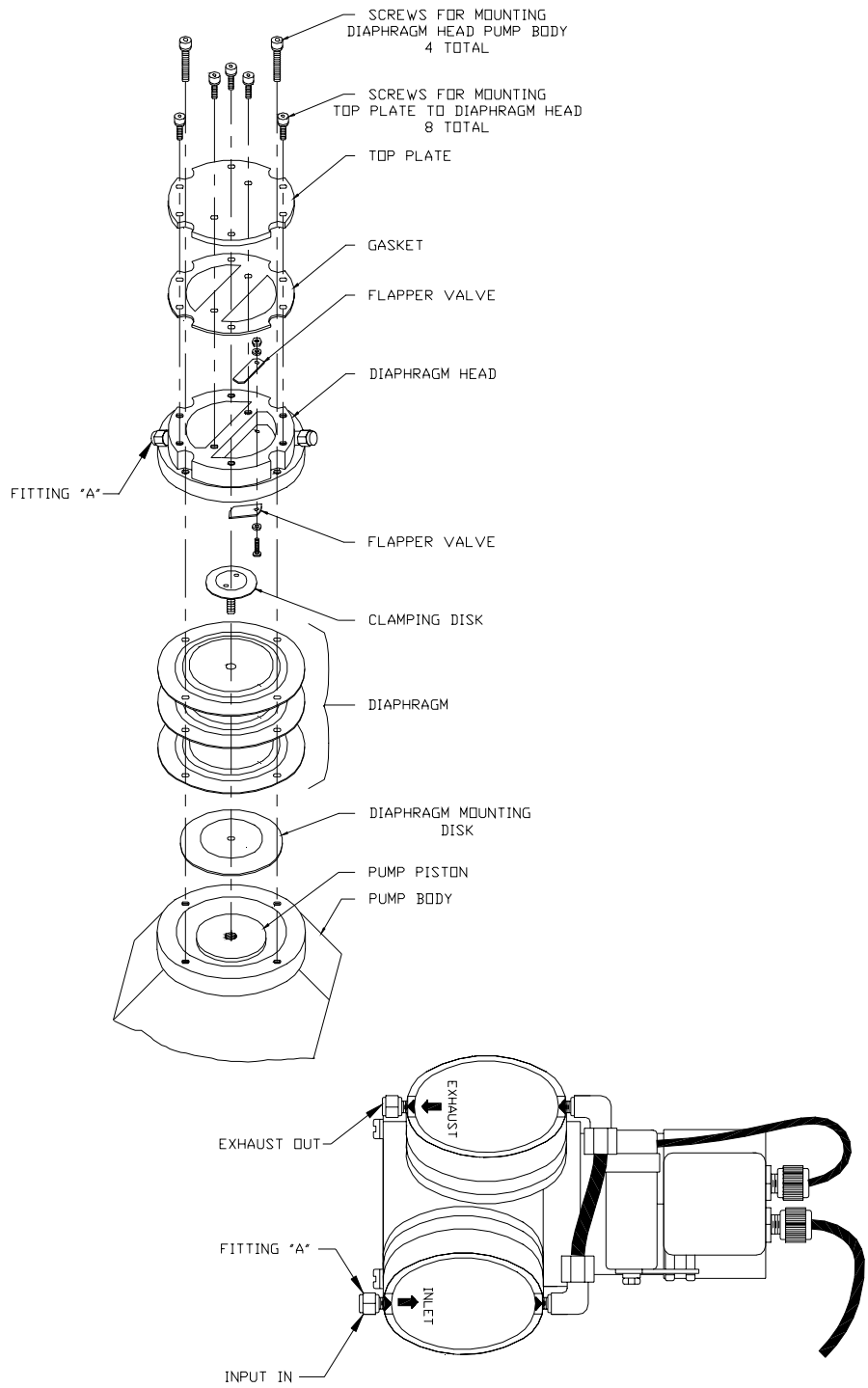

Figure 5–4. Rebuilding the Pump

8. Remove the screw and nut securing the flapper valves and remove and discard old flapper valves.

9. Install the new flapper: check that the screw head and not the washer is on the smooth side of the pump, and check that the flappers are completely flat and straight.

10. Align the diaphragm head correctly as noted in Step 2, and secure with the four socket head screws.

11. Place the new Teflon gasket over the pump head so that the eight screws holes are aligned.

12. Replace the top plate and secure with the eight screws and washers being sure that the Teflon gasket stays in place.

13. Reconnect the plumbing to the instrument and plug in the pump power cord.

14. Check that the reaction chamber pressure reads between 200 and 450 mmHg.

Bypass Pump Rebuilding

Use the following procedure to rebuild the bypass pump (Figure 5–5). To replace the bypass pump, see "Bypass Pump Replacement" in the "Servicing" chapter.

Equipment Required:

Flatblade screwdriver

Pump Repair Kit (flapper valve and diaphragm)

Equipment Damage Some internal components can be damaged by small amounts of static electricity. A properly grounded antistatic wrist strap must be worn while handling any internal component. For more information about appropriate safety precautions, see the "Servicing" chapter. ▲

1. Turn instrument OFF, unplug the power cord, and remove the cover.

2. Loosen the fittings and remove both lines going to the pump.

3. Remove the four screws from the top plate, remove top plate, flapper valve, and the bottom plate.

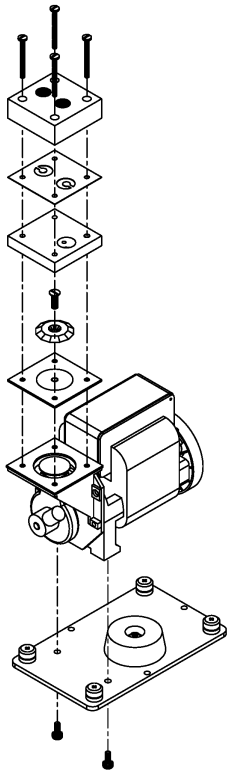

Figure 5–5. Rebuilding the Bypass Pump

4. Remove the screw securing the disphragm to piston and remove diaphragm.

5. Assemble the pump by following the previous steps inreverse, making sure the Teflon (white) side of the diaphragm is facing up and that the flapper valves cover the holes of the top and bottom plate.

6. Perform the “Leak Test” procedure described in this chapter.

Chapter 6
Troubleshooting

This instrument has been designed to achieve a high level of reliability. In the event of problems or failure, the troubleshooting guidelines, board-level connection diagrams, connector pin descriptions, and testing procedures presented in this chapter should be helpful in isolating and identifying problems.

For additional fault location information refer to the "Preventative Maintenance" chapter in this manual.

The service mode in the "Operation" chapter includes parameters and functions that are useful when making adjustments or diagnosing problems.

The Technical Support Department at Thermo Fisher Scientific can also be consulted in the event of problems. See "Service Locations" on page 6-21 for contact information. In any correspondence with the factory, please note both the serial number and program number of the instrument.

This chapter provides the following troubleshooting and service support information:

- "Safety Precautions" on page 6-1
- "Troubleshooting Guides" on page 6-1
- "Board-Level Connection Diagrams" on page 6-5
- "Connector Pin Descriptions" on page 6-7
- "Service Locations" on page 6-21

Safety Precautions

Read the safety precautions in the Preface and "Servicing" chapter before performing any actions listed in this chapter.

Troubleshooting Guides

The troubleshooting guides presented in this chapter are designed to help isolate and identify instrument problems.

Table 6–1 provides general troubleshooting information and indicates the checks that you should perform if you experience an instrument problem.

Table 6–2 lists all the alarm messages you may see on the graphics display and provides recommendations about how to resolve the alarm condition. See "Alarms Menu" in the "Operation" chapter for detailed information.

Table 6–1. Troubleshooting - General Guide

Malfunction	Possible Cause	Action
Does not start up	No power	Check that the instrument is plugged into the proper source (115 or 220 VAC, 50 or 60Hz).
		Check instrument fuses.
	Power Supply	Check voltages using a digital voltmeter.
No output signal (or very low output)	No sample gas reaching the analyzer	Check input sample flow.
	Ruptured pump diaphragm	Rebuild pump head
	Blocked sample capillary	Unplug power cord. Clean or replace capillary.
	No ozone reaching the reaction chamber	Check the Instrument Control menu to see if the ozonator is ON. If it is ON, check dry air supply.
No output signal	Disconnected or defective input or high voltage supply	Unplug power cord. Check that cables are connected properly. Check cable resistance.
	Analyzer not calibrated	Recalibrate.
	Defective ±15 volt	Check supply voltages (Diagnostics menu).
Calibration Drift	Dryer to ozonator depleted	Replace.
	Line voltage fluctuations	Check to see if line voltage is within specifications.
	Defective pump	Rebuild pump.
	Unstable NO or NO_2 source	Replace.
	Clogged capillaries	Unplug power cord. Clean or replace capillary.
	Clogged sample air filter	Replace filter element.
Excessive Noise	Defective or low sensitivity PMT	Unplug power cord. Remove PMT. Install known good PMT. Plug in power cord. Check performance.
	Defective input board	Replace board.
	Defective cooler	Check temperature (less than -7 °C at T_{amb} = 25 °C).

Malfunction	Possible Cause	Action
Non-linear response	Incorrect calibration source	Verify accuracy of multipoint calibration source gas.
	Leak in sample probe line	Check for variable dilution.
Excessive response time	Partially blocked sample capillary	Unplug power cord. Clean or replace capillary.
	Hang up/blockage in sample filter	Change element.
Improper converter operation	Questionable calibration gas	Verify accuracy.
	Converter temperature too high or too low	Temperature should be approximately 325 °C for Molybdenum, 625 °C for stainless steel.
	Low line voltage	Check to see if line voltage is within specifications.
	Molybdenum consumed	Replace Molybdenum converter cartridge.

Table 6–2. Troubleshooting - Alarm Messages

Alarm Message	Possible Cause	Action
Alarm - Internal Temp	Check fan operation	Replace fan if not operating properly.
	Check fan filter	Clean or replace foam filter, refer to “Preventive Maintenance” chapter in this manual.
Alarm - Chamber Temp	Chamber temperature below set point of 50 °C	Check 10K ohm thermistor, replace if bad.
		Check temperature control board to insure the LEDs are coming on. If not, temperature control board could be defective.
Alarm - Cooler Temp	Check fan operation	Replace defective fan.
	Check fan filter	Clean or replace foam filter.
	Cooler reads 80 °C	Replace cooler.
	Cooler does not hold set point of -7 °C	Replace cooler – thermoelectric module inside cooler failed.
	Cooler reads -99.9 °C	Replace cooler – thermocouple bad.

Alarm Message	Possible Cause	Action
Alarm – External Conv. Temp	Converter temperature low	Molybdenum converter should be hot to the touch, if not the heater may have failed. Check that converter temp. set point is approximately 325 °C. Check that voltage to the heater is 115 VAC.
Alarm - Pressure	High pressure indication	Check the pump for a tear in the diaphragm, replace with pump repair kit if necessary. Refer to "Preventive Maintenance" chapter in this manual. Check that capillaries are properly installed and O-rings are in good shape. Replace if necessary. Check flow system for leaks.
Alarm - Flow	Flow low	Check sample capillary (0.020 inch ID) for blockage. Replace as necessary. If using sample particulate filter make sure it is not blocked. Disconnect sample particulate filter from the sample bulkhead, if flow increases, replace the filter.
Alarm – Ozonator Flow	Ozone flow low	Check ozone capillary (0.010 inch ID) for blockage. Replace as necessary.
Alarm - Zero Check Alarm - Span Check	Instrument out of calibration	Recalibrate instrument.
Alarm - Zero Autocal Alarm - Span Autocal		Check gas supply. Perform manual calibration.
Alarm – NO, DIF, NO_y, Prereactor Conc.	Concentration has exceeded range limit	Check to insure range corresponds with expected value. If not select proper range.
Alarm - Motherboard Status Alarm - Interface Status Alarm - I/O Exp Status Alarm - Ext Converter Status	Internal cables not connected properly Board is defective	Check that all internal cables are connected properly. Recycle AC power to instrument. If still alarming, change board.

Board-Level Connection Diagrams

Figure 6–1 through Figure 6–3 are board-level connection diagrams for the common electronics, measurement system, and external converter. These illustrations can be used along with the connector pin descriptions in Table 6–3 through Table 6–10 to troubleshoot board-level faults.

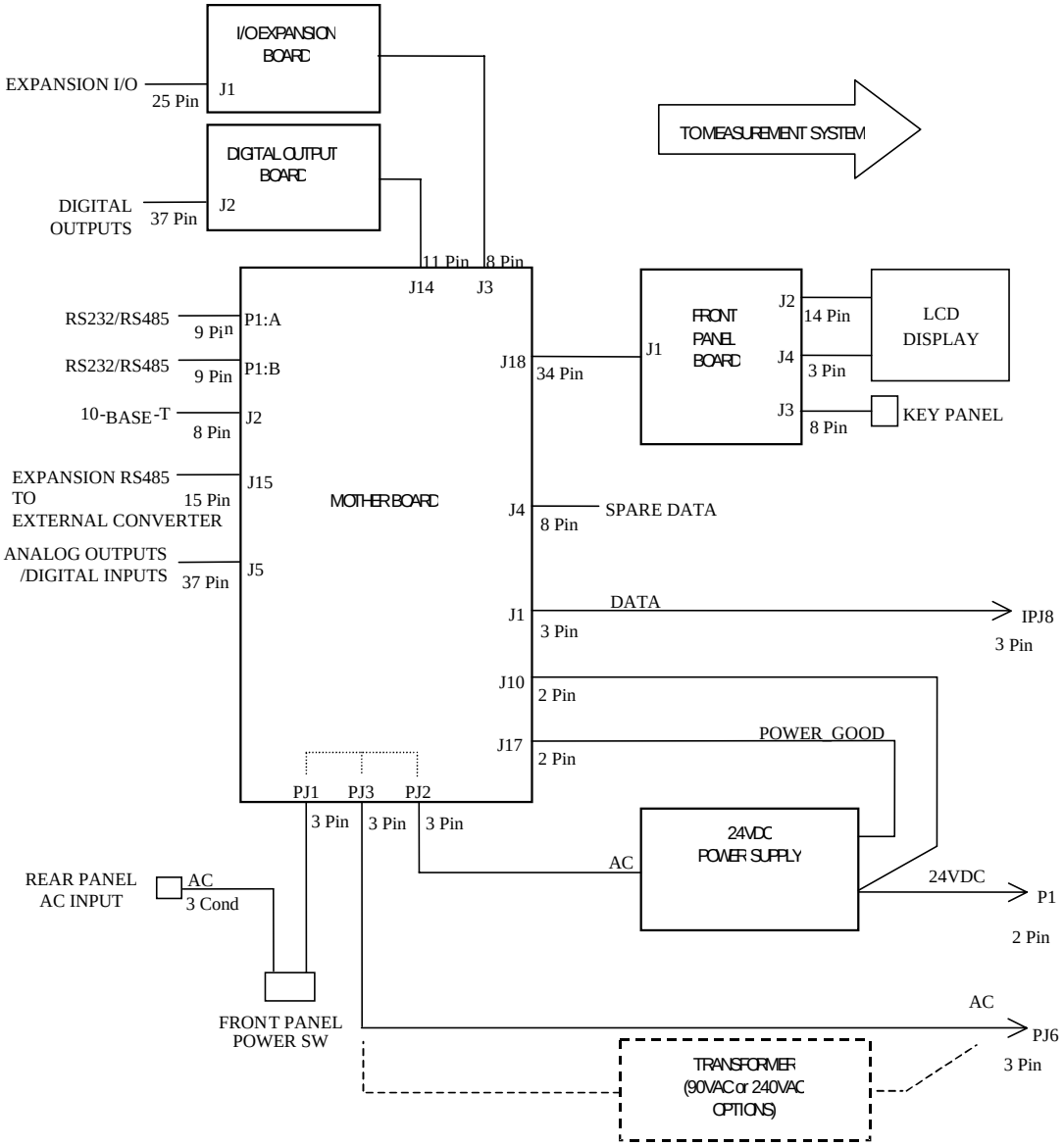

Figure 6–1. Board-Level Connection Diagram - Common Electronics

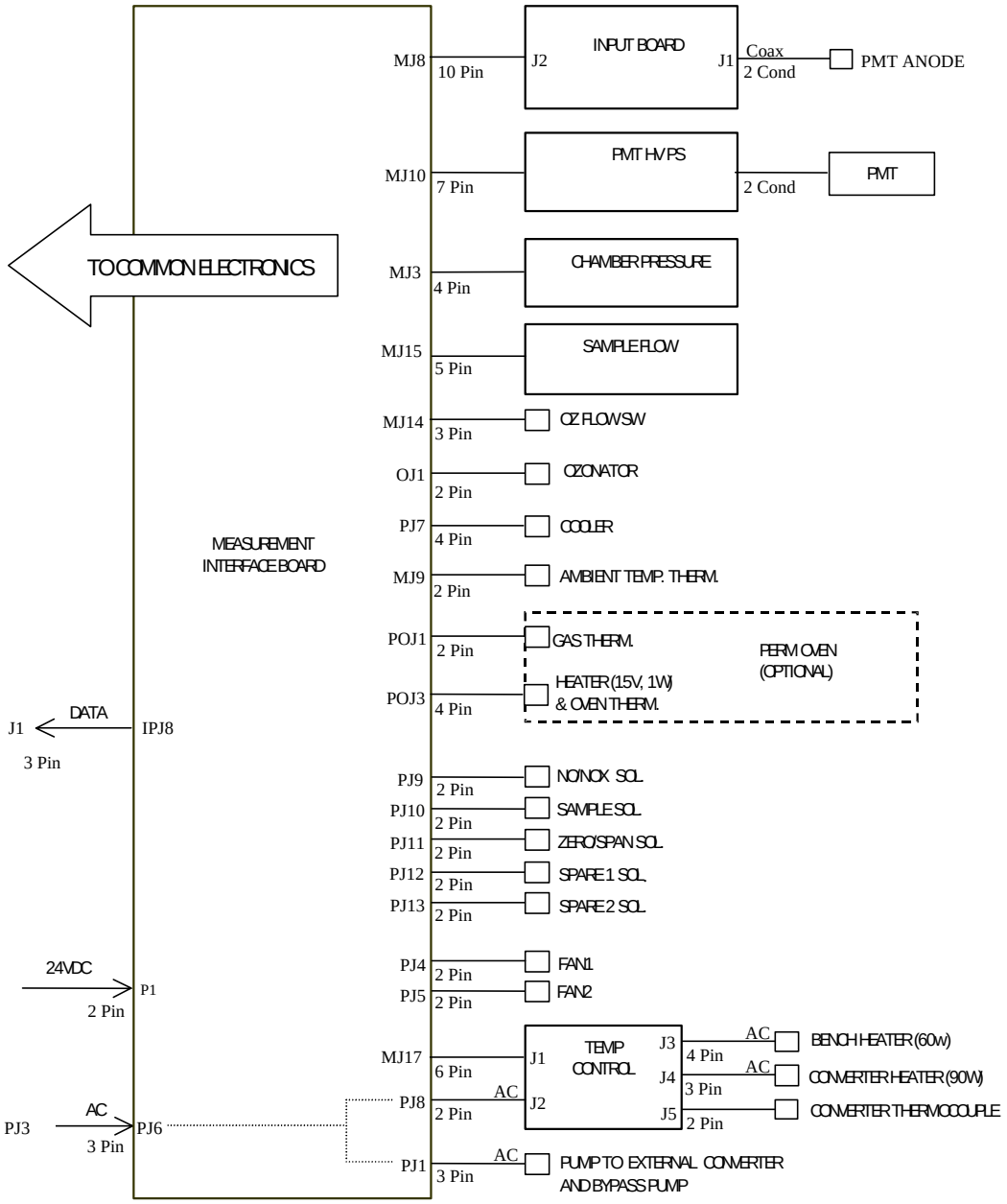

Figure 6–2. Board-Level Connection Diagram - Measurement System

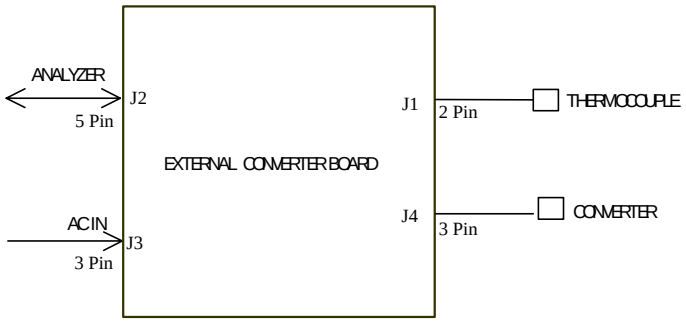

Figure 6–3. Board-Level Connection Diagram - External Converter

Connector Pin Descriptions

The connector pin descriptions in Table 6–3 through Table 6–10 can be used along with the board-level connection diagrams to troubleshoot board-level faults.

"Motherboard Connector Pin Descriptions" on page 6-7

"Measurement Interface Board Connector Pin Descriptions" on page 6-12

"Front Panel Board Connector Pin Diagram" on page 6-15

"I/O Expansion Board (Optional) Connector Pin Descriptions" on page 6-16

"Digital Output Board Connector Pin Descriptions" on page 6-18

"Input Board Connector Pin Descriptions" on page 6-19

"Temperature Control Board Connector Pin Descriptions" on page 6-20

"External Converter Board Connector Pin Descriptions" on page 6-20

Table 6–3. Motherboard Connector Pin Descriptions

Connector Label	Reference Designator	Pin	Signal Description
INTF DATA	J1	1	Ground
		2	+RS485 to Interface Board
		3	-RS485 to Interface Board
10-BASE-T	J2	1	Ethernet Output (+)
		2	Ethernet Output (-)
		3	Ethernet Input (+)
		4	NC

Connector Label	Reference Designator	Pin	Signal Description
		5	NC
		6	Ethernet Input (-)
		7	NC
		8	NC
EXPANSION BD	J3	1	+5V
		2	+24V
		3	+24V
		4	Ground
		5	Ground
		6	Ground
		7	+RS485 to Expansion Board
		8	-RS485 to Expansion Board
SPARE DATA	J4	1	+5V
		2	+24V
		3	+24V
		4	Ground
		5	Ground
		6	Ground
		7	+RS485 to Spare Board
		8	-RS485 to Spare Board
I/O	J5	1	Power Fail Relay N.C. Contact
		2	Ground
		3	TTL Input 1
		4	TTL Input 2
		5	Ground
		6	TTL Input 5
		7	TTL Input 7
		8	TTL Input 8
		9	TTL Input 10
		10	Ground
		11	TTL Input 13
		12	TTL Input 15
		13	Ground
		14	Analog Voltage 1

Connector Label	Reference Designator	Pin	Signal Description
		15	Analog Voltage 3
		16	Ground
		17	Analog Voltage 5
		18	Ground
		19	Ground
		20	Power Fail Relay COM
		21	Power Fail Relay N.O. Contact
		22	Ground
		23	TTL Input 3
		24	TTL Input 4
		25	TTL Input 6
		26	Ground
		27	TTL Input 9
		28	TTL Input 11
		29	TTL Input 12
		30	TTL Input 14
		31	TTL Input 16
		32	Ground
		33	Analog Voltage 2
		34	Analog Voltage 4
		35	Ground
		36	Analog Voltage 6
		37	Ground
SER EN	J7	1	Serial Enable Jumper
		2	+3.3V
24V IN	J10	1	+24V
		2	Ground
DIGITAL I/O	J14	1	+5V
		2	+24V
		3	+24V
		4	Ground
		5	Ground
		6	Ground
		7	SPI Reset

Connector Label	Reference Designator	Pin	Signal Description
		8	SPI Input
		9	SPI Output
		10	SPI Board Select
		11	SPI Clock
EXT. RS485	J15	1	-RS485 to Rear Panel
		2	-RS485 to Rear Panel
		3	+5V
		4	+5V
		5	+5V
		6	Ground
		7	Ground
		8	Ground
		9	NC
		10	NC
		11	+24
		12	+24
		13	+24
		14	+24
		15	+24
24 MONITOR	J17	1	24V Power Monitor
		2	Ground
FRONT PANEL BD	J18	1	Ground
		2	Ground
		3	LCLK – LCD Signal
		4	Ground
		5	Ground
		6	LLP – LCD Signal
		7	LFLM – LCD Signal
		8	LD4 – LCD Signal
		9	LD0 – LCD Signal
		10	LD5 – LCD Signal
		11	LD1 – LCD Signal
		12	LD6 – LCD Signal

Connector Label	Reference Designator	Pin	Signal Description
		13	LD2 – LCD Signal
		14	LD7 – LCD Signal
		15	LD3 – LCD Signal
		16	LCD Bias Voltagel
		17	+5V
		18	Ground
		19	Ground
		20	LCD_ONOFF – LCD Signal
		21	Keypad Row 2 Input
		22	Keypad Row 1 Input
		23	Keypad Row 4 Input
		24	Keypad Row 3 Input
		25	Keypad Col 2 Select
		26	Keypad Col 1 Select
		27	Keypad Col 4 Select
		28	Keypad Col 3 Select
		29	Ground
		30	Ground
		31	Ground
		32	Ground
		33	+24V
		34	+24V
RS232/RS485:A	P1:A	1	NC
		2	Serial Port 1 RX (-RS485 IN)
		3	Serial Port 1 TX (-RS485 OUT)
		4	NC
		5	Ground
		6	NC
		7	Serial Port 1 RTS (+RS485 OUT)
		8	Serial Port 1 CTS (+RS485 IN)
		9	NC
RS232/RS485:B	P1:B	1	NC
		2	Serial Port 2 RX (-RS485 IN)
		3	Serial Port 2 TX (-RS485 OUT)

Connector Label	Reference Designator	Pin	Signal Description
		4	NC
		5	Ground
		6	NC
		7	Serial Port 2 RTS (+RS485 OUT)
		8	Serial Port 2 CTS (+RS485 IN)
		9	NC
AC IN	PJ2	1	AC-HOT
		2	AC-NEUT
		3	AC-Ground
AC 24VPWR	J1	1	AC-HOT
		2	AC-NEUT
		3	AC-Ground
AC INTF BD	PJ3	1	AC-HOT
		2	AC-NEUT
		3	AC-Ground

Table 6–4. Measurement Interface Board Connector Pin Descriptions

Connector Label	Reference Designator	Pin	Signal Description
DATA	IPJ8	1	Ground
		2	+RS485 from Motherboard
		3	-RS485 from Motherboard
PRES	MJ3	1	Pressure Sensor Input
		2	Ground
		3	+15V
		4	-15V
INPUT BD	MJ8	1	+15V
		2	Ground
		3	-15V
		4	+5V
		5	Ground
		6	Measurement Frequency Output
		7	Amplifier Zero Adjust Voltage

Connector Label	Reference Designator	Pin	Signal Description
		8	SPI Output
		9	SPI Clock
		10	SPI Board Select
AMB TEMP	MJ9	1	Ambient Temperature Thermistor
		2	Ground
HVPS	MJ10	1	HV Power Supply Voltage Adjust
		2	Ground
		3	HV Power Supply On/Off
		4	Ground
		5	HV Power Supply Voltage Monitor
		6	Ground
		7	Ground
FLOW SW	MJ14	1	NC
		2	Ground
		3	Ozonator Flow OK Switch
FLOW	MJ15	1	Flow Sensor Input
		2	Ground
		3	+15V
		4	-15V
		5	Ground
TEMP CTRL	MJ17	1	Bench Temperature Input
		2	Ground
		3	-15V
		4	Converter Heater On/Off
		5	Converter Temperature Input
		6	+15V_PWR
OZONATOR	OJ1	1	Ozonator Output A
		2	Ozonator Output B
24V IN	P1	1	+24V
		2	Ground
AC PUMP	PJ1	1	AC-HOT
		2	AC-NEUT
		3	AC-Ground
FAN 1	PJ4	1	+24V

Connector Label	Reference Designator	Pin	Signal Description
		2	Ground
FAN 2	PJ5	1	+24V
		2	Ground
AC IN	PJ6	1	AC-HOT
		2	AC-NEUT
		3	AC-Ground
COOLER	PJ7	1	Cooler Thermistor
		2	Ground
		3	+15V_PWR
		4	Cooler On/Off Control
AC TEMP	PJ8	1	AC-HOT
		2	AC-NEUT
		3	AC-Ground
NO/NOX SOL.	PJ9	1	+24V
		2	NO/NOX Solenoid Control
SAMPLE SOL.	PJ10	1	+24V
		2	Sample Solenoid Control
Z/S SOL.	PJ11	1	+24V
		2	Zero/Span Solenoid Control
SPARE1 SOL.	PJ12	1	+24V
		2	Spare 1 Solenoid Control
SPARE2 SOL.	PJ13	1	+24V
		2	Spare 2 Solenoid Control
PERM OVEN THERM	POJ1	1	Perm Oven Gas Thermistor
		2	Ground
PERM OVEN	POJ3	1	Perm Oven Heater On/Off
		2	+15V_PWR
		3	Perm Oven Thermistor
		4	Ground

Table 6–5. Front Panel Board Connector Pin Diagram

Connector Label	Reference Designator	Pin	Signal Description
MOTHER BOARD	J1	1	Ground
		2	Ground
		3	LCLK – LCD Signal
		4	Ground
		5	Ground
		6	LLP – LCD Signal
		7	LFLM – LCD Signal
		8	LD4 – LCD Signal
		9	LD0 – LCD Signal
		10	LD5 – LCD Signal
		11	LD1 – LCD Signal
		12	LD6 – LCD Signal
		13	LD2 – LCD Signal
		14	LD7 – LCD Signal
		15	LD3 – LCD Signal
		16	LCD Bias Voltage
		17	+5V
		18	Ground
		19	Ground
		20	LCD_ONOFF – LCD Signal
		21	Keypad Row 2 Input
		22	Keypad Row 1 Input
		23	Keypad Row 4 Input
		24	Keypad Row 3 Input
		25	Keypad Col 2 Select
		26	Keypad Col 1 Select
		27	Keypad Col 4 Select
		28	Keypad Col 3 Select
		29	Ground
		30	Ground
		31	Ground
		32	Ground
		33	+24V

Connector Label	Reference Designator	Pin	Signal Description
		34	+24V
LCD DATA	J2	1	LD0_5V – LCD Signal
		2	LD1_5V – LCD Signal
		3	LD2_5V – LCD Signal
		4	LD3_ONOFF_5V – LCD Signal
		5	LCD_ONOFF_5V – LCD Signal
		6	LFLM_5V – LCD Signal
		7	NC
		8	LLP_5V – LCD Signal
		9	LCLK_5V – LCD Signal
		10	+5V
		11	Ground
		12	-25V
		13	LCD Bias Voltage
		14	Ground
KEYBOARD	J3	1	Keypad Row 1 Input
		2	Keypad Row 2 Input
		3	Keypad Row 3 Input
		4	Keypad Row 4 Input
		5	Keypad Col 1 Select
		6	Keypad Col 2 Select
		7	Keypad Col 3 Select
		8	Keypad Col 4 Select
LCD BACKLIGHT	J4	1	+5V Supply
		2	NC
		3	Ground

Table 6–6. I/O Expansion Board (Optional) Connector Pin Descriptions

Connector Label	Reference Designator	Pin	Signal Description
EXPANSION I/O	J1	1	Analog Voltage Input 1
		2	Analog Voltage Input 2
		3	Analog Voltage Input 3

Connector Label	Reference Designator	Pin	Signal Description
		4	Ground
		5	Analog Voltage Input 4
		6	Analog Voltage Input 5
		7	Analog Voltage Input 6
		8	Ground
		9	Analog Voltage Input 7
		10	Analog Voltage Input 8
		11	Ground
		12	NC
		13	Current Output Return
		14	Ground
		15	Current Output 1
		16	Current Output Return
		17	Current Output 2
		18	Current Output Return
		19	Current Output 3
		20	Current Output Return
		21	Current Output 4
		22	Current Output Return
		23	Current Output 5
		24	Current Output Return
		25	Current Output 6
MOTHER BD	J2	1	+5V
		2	+24V
		3	+24V
		4	Ground
		5	Ground
		6	Ground
		7	+RS485 to Motherboard
		8	-RS485 to Motherboard

Table 6–7. Digital Output Board Connector Pin Descriptions

Connector Label	Reference Designator	Pin	Signal Description
MOTHER BD	J1	1	+5V
		2	+24V
		3	+24V
		4	Ground
		5	Ground
		6	Ground
		7	SPI Reset
		8	SPI Input
		9	SPI Output
		10	SPI Board Select
		11	SPI Clock
DIGITAL OUTPUTS	J2	1	Relay 1 Contact a
		2	Relay 2 Contact a
		3	Relay 3 Contact a
		4	Relay 4 Contact a
		5	Relay 5 Contact a
		6	Relay 6 Contact a
		7	Relay 7 Contact a
		8	Relay 8 Contact a
		9	Relay 9 Contact a
		10	Relay 10 Contact a
		11	NC
		12	Solenoid Drive Output 1
		13	Solenoid Drive Output 2
		14	Solenoid Drive Output 3
		15	Solenoid Drive Output 4
		16	Solenoid Drive Output 5
		17	Solenoid Drive Output 6
		18	Solenoid Drive Output 7
		19	Solenoid Drive Output 8
		20	Relay 1 Contact b
		21	Relay 2 Contact b

Connector Label	Reference Designator	Pin	Signal Description
		22	Relay 3 Contact b
		23	Relay 4 Contact b
		24	Relay 5 Contact b
		25	Relay 6 Contact b
		26	Relay 7 Contact b
		27	Relay 8 Contact b
		28	Relay 9 Contact b
		29	Relay 10 Contact b
		30	+24V
		31	+24V
		32	+24V
		33	+24V
		34	+24V
		35	+24V
		36	+24V
		37	+24V

Table 6–8. Input Board Connector Pin Descriptions

Connector Label	Reference Designator	Pin	Signal Description
PMT IN	J1	1	PMT Input
		2	Ground
INTF BD	J2	1	+15V
		2	Ground
		3	-15V
		4	+5V
		5	Ground
		6	Measurement Frequency Output
		7	Amplifier Zero Adjust Voltage
		8	SPI Input
		9	SPI Clock
		10	SPI Board Select

Table 6–9. Temperature Control Board Connector Pin Descriptions

Connector Label	Reference Designator	Pin	Signal Description
INTERFACE	J1	1	Bench Temperature Input
		2	Ground
		3	-15V
		4	Converter Heater On/Off
		5	Converter Temperature Input
		6	+15V_PWR
AC INPUT	J2	1	AC-HOT
		2	AC-NEUT
BENCH	J3	1	Bench Heater AC Output
		2	Bench Heater AC Return
		3	Ground
		4	Bench Thermistor
CONVERTER	J4	1	Ground
		2	Converter Heater AC Output
		3	Converter Heater AC Return
CONV TC	J5	1	Converter Thermocouple TC
		2	Converter Thermocouple TC+
SS TEMP	J6	1	SS Temperature Range Jumper A
		2	SS Temperature Range Jumper B

Table 6–10. External Converter Board Connector Pin Descriptions

Connector Label	Reference Designator	Pin	Signal Description
CONV TC	J1	1	Converter Thermocouple TC
		6	Converter Thermocouple TC+
ANALYZER COMM	J2	1	+24V
		2	
		3	
		4	
		5	AC-NEUT
AC IN	J3	1	AC-HOT
		2	AC-NEUT

Connector Label	Reference Designator	Pin	Signal Description
		3	AC-Ground
CONVERTER	J4	1	Ground
		2	Converter Heater AC Output
		2	Converter Heater AC Return

Service Locations

For additional assistance, service is available from exclusive distributors worldwide. Contact one of the phone numbers below for product support and technical information or visit us on the web at www.thermo.com/aqi.

1-866-282-0430 Toll Free

1-508-520-0430 International

Chapter 7
Servicing

This chapter explains how to replace the Model 42*i* NO_y subassemblies. It assumes that a subassembly has been identified as defective and needs to be replaced.

For fault location information refer to the "Preventative Maintenance" chapter and the "Troubleshooting" chapter in this manual.

The service mode in the "Operation" chapter also includes parameters and functions that are useful when making adjustments or diagnosing problems.

For additional service assistance, see "Service Locations" at the end of this chapter.

This chapter includes the following parts information and component replacement procedures:

- "Safety Precautions" on page 7-2
- "Firmware Updates" on page 7-4
- "Accessing the Service Mode" on page 7-4
- "Replacement Parts List" on page 7-4
- "Cable List" on page 7-6
- "External Device Connection Components" on page 7-7
- "Removing the Measurement Bench and Lowering the Partition Panel" on page 7-10
- "Pump Replacement" on page 7-11
- "Vacuum Pump Diaphragm and Valve Replacement" on page 7-12
- "Bypass Pump Replacement" on page 7-16
- "Fan Replacement" on page 7-17
- "PMT Cooler and Reaction Chamber Assembly Replacement" on page 7-18
- "Photomultiplier Tube Replacement" on page 7-20
- "PMT High Voltage Power Supply Replacement" on page 7-21

- "PMT Voltage Adjustment" on page 7-23
- "Reaction Chamber Cleaning or Removal" on page 7-23
- "External Converter Replacement" on page 7-25
- "Solenoid Valve Replacement" on page 7-27
- "Ozonator Assembly Replacement" on page 7-28
- "Ozonator Transformer Replacement" on page 7-30
- "Input Board Replacement" on page 7-30
- "Input Board Calibration" on page 7-32
- "DC Power Supply Replacement" on page 7-32
- "Analog Output Testing" on page 7-33
- "Analog Output Calibration" on page 7-36
- "Analog Input Calibration" on page 7-37
- "Pressure Transducer Assembly Replacement" on page 7-38
- "Pressure Transducer Calibration" on page 7-39
- "Temperature Control Board Replacement" on page 7-41
- "Ambient Temperature Calibration" on page 7-42
- "Fuse Replacement" on page 7-43
- "I/O Expansion Board (Optional) Replacement" on page 7-43
- "Digital Output Board Replacement" on page 7-45
- "Motherboard Replacement" on page 7-46
- "Measurement Interface Board Replacement" on page 7-47
- "External Converter Interface Board Replacement" on page 7-48
- "Flow Transducer Replacement" on page 7-49
- "Flow Transducer Calibration" on page 7-50
- "Front Panel Board Replacement" on page 7-51
- "LCD Module Replacement" on page 7-52
- "Service Locations" on page 7-53

Safety Precautions

Read the safety precautions before beginning any procedures in this chapter.

WARNING The service procedures in this manual are restricted to qualified service representatives. ▲

If the equipment is operated in a manner not specified by the manufacturer, the protection provided by the equipment may be impaired. ▲

CAUTION Carefully observe the instructions in each procedure. Avoid contact with converter heated components. ▲

Allow converter to cool to room temperature before handling converter components. ▲

Equipment Damage Some internal components can be damaged by small amounts of static electricity. A properly grounded antistatic wrist strap must be worn while handling any internal component (Figure 7–1). If an antistatic wrist strap is not available, be sure to touch a grounded metal object before touching any internal components. When the instrument is unplugged, the chassis is not at earth ground. ▲

Handle all printed circuit boards by the edges. ▲

Do not point the photomultiplier tube at a light source. This can permanently damage the tube. ▲

Do not remove the LCD panel or frame from the LCD module. ▲

The LCD polarizing plate is very fragile, handle it carefully. ▲

Do not wipe the LCD polarizing plate with a dry cloth, it may easily scratch the plate. ▲

Do not use alcohol, acetone, MEK or other Ketone based or aromatic solvents to clean the LCD module, use a soft cloth moistened with a naphtha cleaning solvent. ▲

Do not place the LCD module near organic solvents or corrosive gases. ▲

Do not shake or jolt the LCD module. ▲

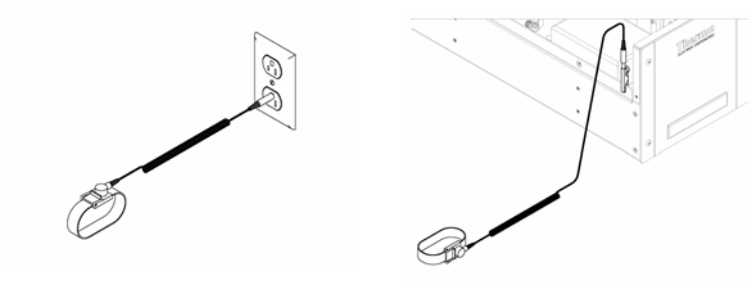

Figure 7–1. Properly Grounded Antistatic Wrist Strap

Firmware Updates

The firmware can be updated by the user in the field via the serial port or over the Ethernet. This includes both the main processor firmware and the firmware in all low-level processors. Refer to the *iPort* manual for the firmware update procedure.

Accessing the Service Mode

If the Service Menu is not displayed on the Main Menu, use the following procedure to display it.

1. At the Main Menu, press [↓] to scroll to Instrument Controls > press [↵] > [↓] to scroll to **Service Mode** > and press [↵].

   The Service Mode screen appears.

2. Press [↵] to toggle the Service Mode to ON.

3. Press [■] > [■] to return to the Main Menu.

4. Return to the procedure.

Replacement Parts List

Table 7–1 lists the replacement parts for the Model 42*i* NO_y major subassemblies. Refer to Figure 7–2 through Figure 7-4 to identify the component location.

Table 7–1. Model 42*i* NO_y Replacement Parts

Part Number	Description
100480-00	Front Panel Pushbutton Board
101491-05	Processor Board
100533-00	Motherboard
100539-00	Digital Output Board

Part Number	Description
100542-00	I/O Expansion Board (Optional)
102340-00	Front Panel Connector Board
102496-00	Front Panel Display
101399-00	Transformer, 220-240VAC (Optional)
101863-00	Transformer, 100VAC (Optional)
100536-00	Measurement Interface Board
102999-00	External Converter Interface Board
100856-00	Temperature Control Board (Molybdenum Converter)
101167-00	Input Board Assembly
9973	Ozonator Assembly
101419-00	Ozonator Transformer
101023-00	Pressure Transducer
101021-00	Flow Transducer (Sample)
101620-00	Flow Switch (Ozone)
9367	Photomultiplier Tube (PMT)
101024-00	PMT High Voltage Power Supply
101324-00	PMT Base Socket Assembly
101390-00	Solenoid Valve
101020-00	Cooler Assembly
101008-03	Reaction Chamber Assembly
101009-00	External Converter Assembly (Molybdenum 110VAC)
9269	Molybdenum Converter Cartridge
9456	Pump 120VAC, 60Hz
8079	Pump 110VAC, 50Hz
101426-00	Bypass Pump 110VAC w/Plate
8606	Pump Repair Kit (for 101426-00)
9457	Pump 220VAC, 50Hz
8500	Pump 220VAC, 60Hz
8080	Pump 100VAC, 50-60Hz
9464	Pump Repair Kit
101055-00	AC Receptacle Assembly
101681-00	Power Supply Assembly, 24VDC, w/Base Plate and Screws
100907-00	Fan, 24VDC
8630	Fan Filter

Part Number	Description
101905-00	Fuse, 250VAC, 4.0 Amp, SlowBlow (for 100VAC and 110VAC models)
101904-00	Fuse, 250VAC, 2.0 Amp, SlowBlow (for 220-240VAC models)
101688-00	Ambient Temperature Connector with Thermistor
4119	Capillary 0.008-inch ID
4126	Capillary 0.020-inch ID
4110	Capillary 0.022-inch ID
6556	Optical Filter Kit (Red Filter, Quartz Window, Rubber Washer)
6998	DriRite

Cable List

Table 7–2 describes the Model 42*i* NO_y cables. See the "Troubleshooting" chapter for associated connection diagrams and board connector pin descriptions.

Table 7–2. Model 42*i* NO_y Cables

Part Number	Description
101036-00	DC Power Supply 24V Output
101037-00	115VAC Supply to Interface Board
101048-00	RS-485/Data
101038-00	AC Power Switch to Motherboard
101364-00	DC Power Supply Status Monitor
101054-00	Motherboard to Front Panel Board
101035-00	DC Power Supply AC Input
101033-00	AC from Receptacle
101377-00	AC to Power Switch
101267-00	Fan Power Cable
101346-00	Temperature Control
101355-00	Signal Output Ribbon
101050-00	Heater Power
101055-00	Main AC Receptacle Assembly
102057-00	AC to External Pump
103494-00	3 Conductor Cable
102774-00	AC Adaptor
4198	Outlet Cable External Converter
103261-00	Outlet Cable Interface Board External Converter

External Device Connection Components

Table 7–3 lists the standard and optional cables and components used for connecting external devices such as PCs and data loggers to an *i*Series instrument.

Table 7–3. External Device Connection Components

Part Number	Description
102562-00	Terminal Block and Cable Kit (DB25) (optional)
102556-00	Terminal Block and Cable Kit (DB37) (optional)
102645-00	Cable, DB37M to Open End Cable, Six Feet (optional)
102646-00	Cable, DB37F to Open End, Six Feet (optional)
102659-00	Cable, DB25M to Open End, Six Feet (optional)
6219	Cable, RS-232 (optional)
103005-00	Terminal Board PCB Assembly, DB15M (standard with all NO_y instruments)
102888-00	Terminal Board PCB Assembly, DB37F (standard with all instruments)
102891-00	Terminal Board PCB Assembly, DB37M (standard with all instruments)
103084-00	Terminal Board PCB Assembly, DB25M (optional) Included with optional I/O Expansion Board in all instruments.

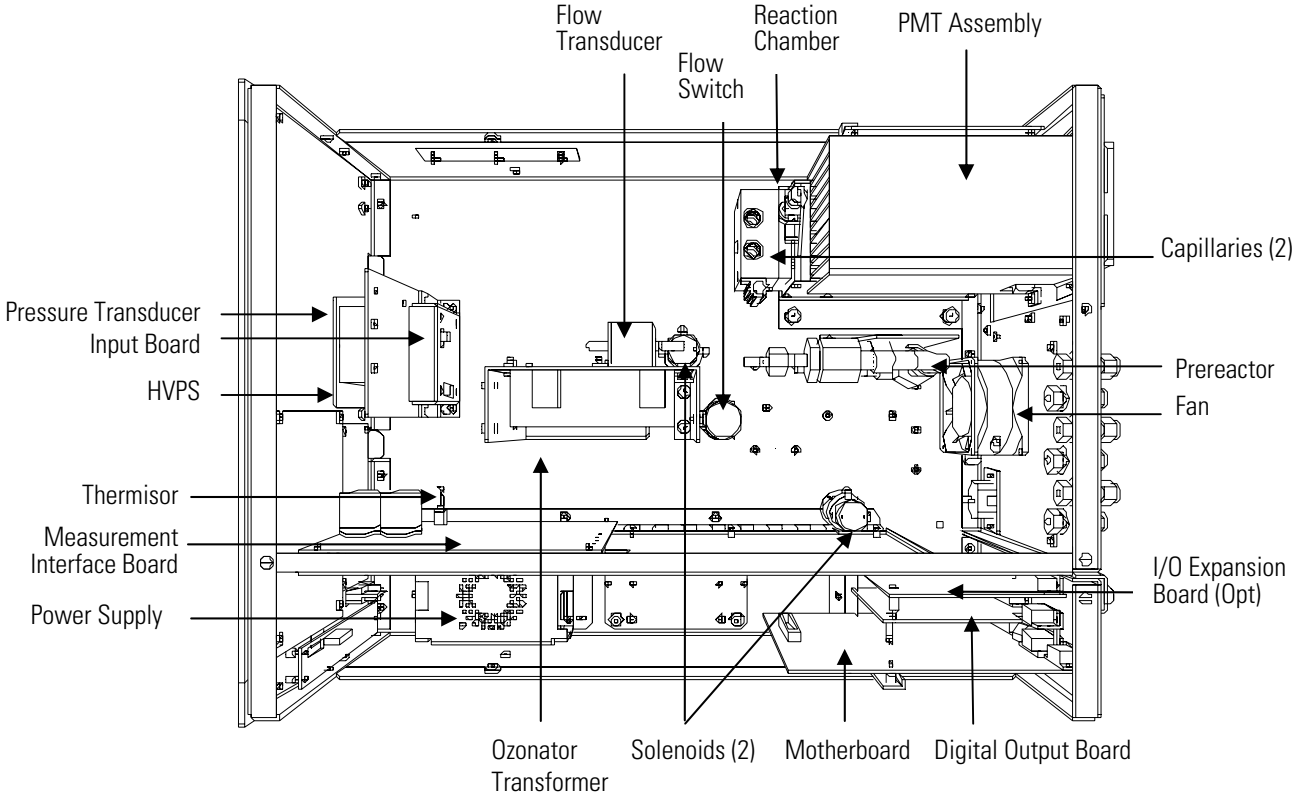

Figure 7–2. Component Layout for Analyzer

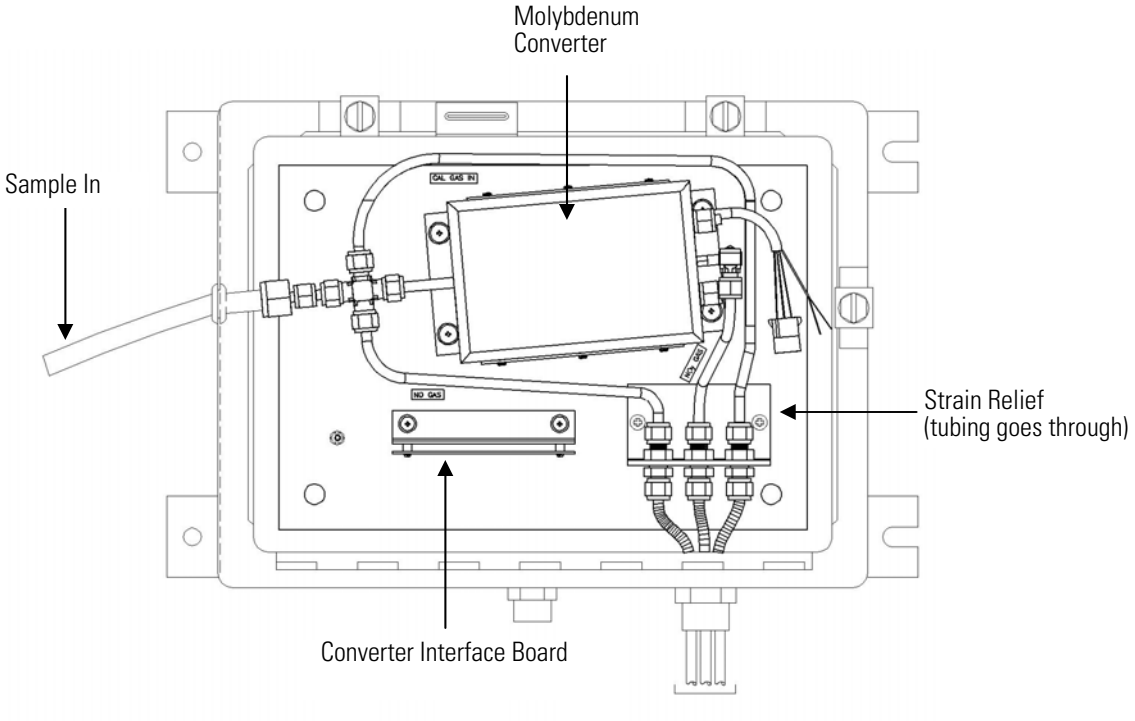

Figure 7–3. Component Layout for External Converter

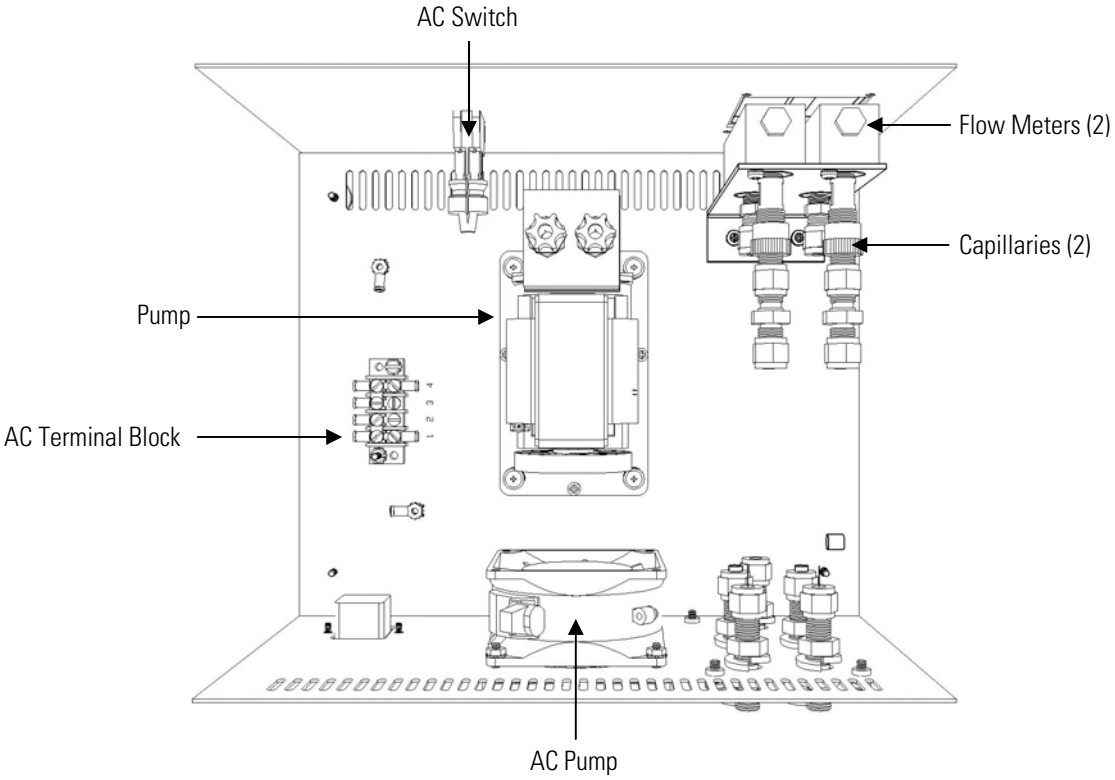

Figure 7–4. Component Layout for Bypass Pump

Removing the Measurement Bench and Lowering the Partition Panel

The measurement bench can be removed and the partition panel can be lowered to improve access to connectors and components. Refer to the following steps when a procedure requires lowering the partition panel (see Figure 7–5).

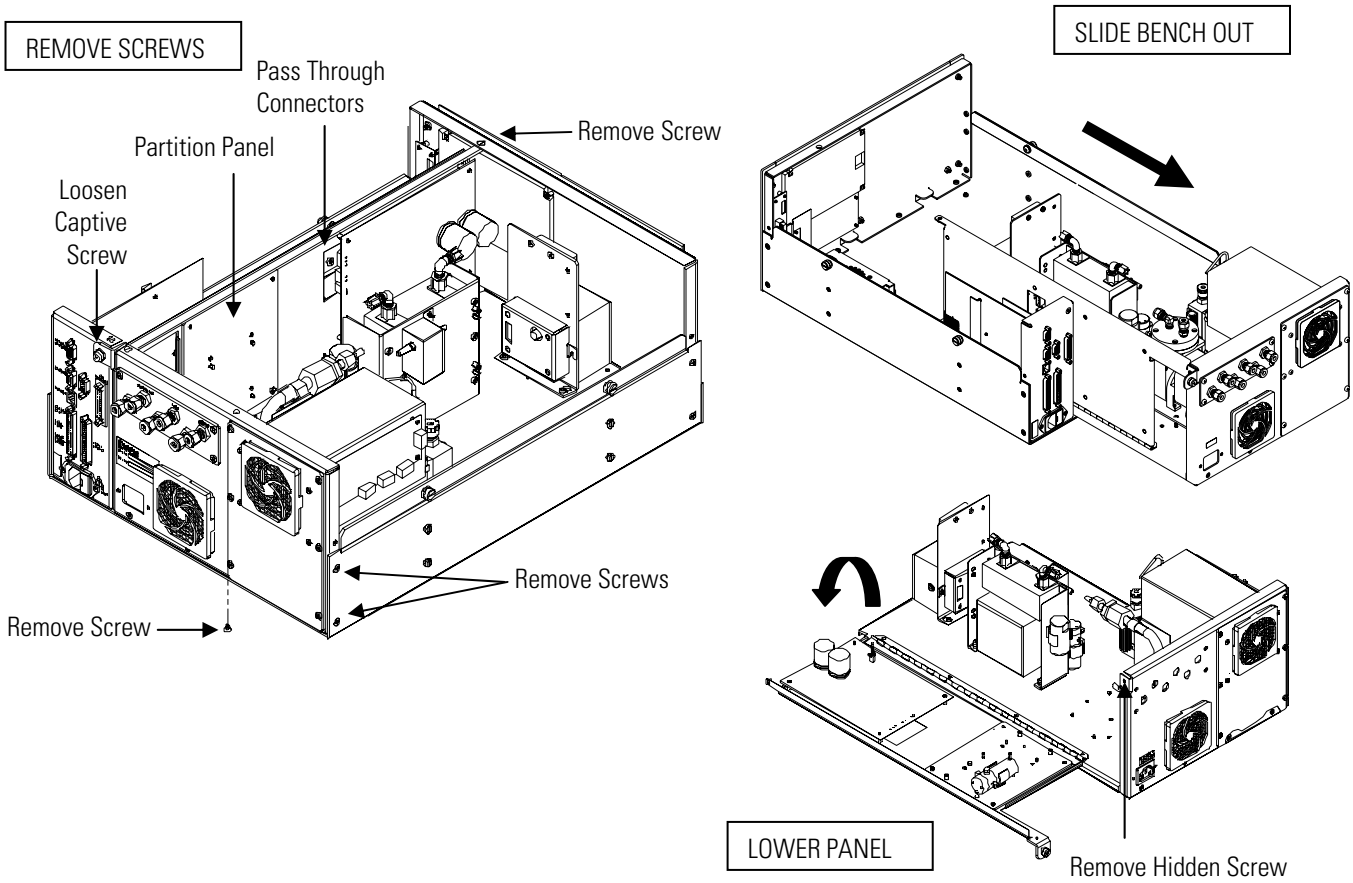

Figure 7–5. Removing the Measurement Bench and Lowering the Partition Panel

Equipment Required:

Philips screwdriver

Equipment Damage Some internal components can be damaged by small amounts of static electricity. A properly grounded antistatic wrist strap must be worn while handling any internal component. ▲

1. Turn instrument OFF and unplug the power cord.
2. If the instrument is mounted in a rack, remove it from the rack.
3. Remove the cover.
4. Disconnect the plumbing connections at the rear of the measurement bench.
5. Disconnect the three connectors that pass through the center of the partition panel.
6. Remove two screws from the left side of the case (viewed from front).
7. Remove one screw from the bottom front of the case.
8. Remove one screw from the top front of the partition panel.
9. While holding the case securely, loosen the captive screw at the rear of the measurement bench, and pull the measurement bench from the rear of the case.
10. Remove the screw at the top rear of the partition panel securing the top of partition panel to the measurement bench, and lower the panel being careful not to put excessive tension on the cables.
11. Replace the measurement bench by following previous steps in reverse.

Pump Replacement

Use the following procedure to replace the pump (see Figure 7–6).To rebuild the pump, see "Pump Rebuilding" in the "Preventive Maintenance" chapter.

Equipment Required:

110V pump or 220V pump

1. Disconnect the pump power line from the AC power outlet.

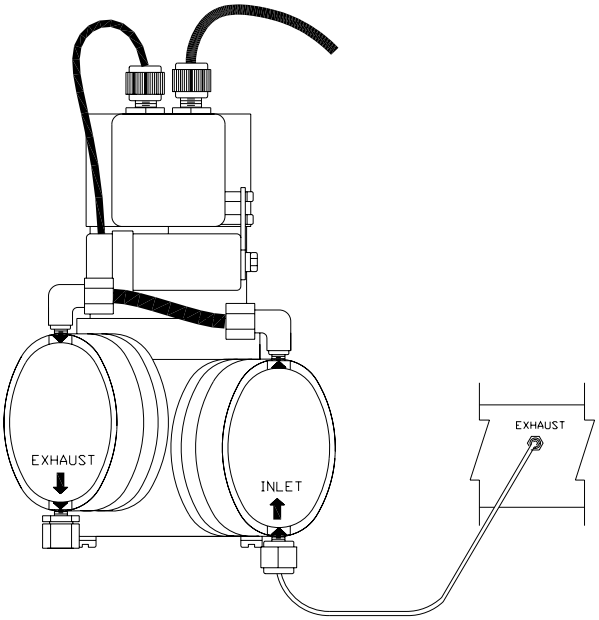

Figure 7–6. Replacing the Pump

2. Remove both inlet and exhaust lines from the pump.

3. Install the new pump by following the previous steps in reverse.

Vacuum Pump Diaphragm and Valve Replacement

Use the following procedures to replace the diaphragm and valve for the vacuum pumps (Figure 7–7).

Equipment Required:

- Allen wrench, 4 mm
- Nut driver, 7/32-inch or 5.5 mm
- Allen wrench, 3 mm
- Spanner wrench, 3.8 mm diameter by 4.5 mm long inserts
- Small flat-blade screwdriver
- Large flat-blade screwdriver
- Cleaning agent (alcohol)
- Fine-grade steel wool
- “LOC-TITE” blue breakable thread adhesive

Equipment Damage Some internal components can be damaged by small amounts of static electricity. A properly grounded antistatic wrist strap must be worn while handling any internal component. ▲

Diaphragm Replacement

Use the following procedure to replace the diaphragm (Figure 7–7).

1. Undo the four socket head cap screws and washers (“C”) for each head and lift off the heads with tubing from the pump body. Keep the heads connected if at all possible: disconnecting and then reconnecting the PTFE tube can cause leaks.

2. Check for smooth opening and closing of the reed valves (“Q”): a number of sets of diaphragms can be replaced before there is a need to replace the valves. Follow the instructions for “valve replacement” if changing of the valves is required.

3. Use the spanner wrench to loosen and remove the one-piece clamping disc/screw (“E”). Remove the old diaphragms from both heads (“G”).

4. Remove the four pan head screws with M5 washers (“J”) and remove the housing cover (“K”) from the front of the pump body. If necessary, carefully use a small flat-bladed screwdriver to pry-off the housing cover.

5. Install the two PTFE (white color) diaphragms together with one TFM (translucent) diaphragm as shown in Figure E-1. Install with the ridges of the diaphragm convolutions as shown in the diaphragm stack cross-section inset.

6. Temporarily insert two of the head screws through the diaphragms and screw into the pump body to keep the position of the diaphragms as the clamping disc is tightened. Any stress applied re-aligning the diaphragm in the process of assembling the head will significantly reduce diaphragm life

7. Check the threads of the clamping disc to insure that they are clean and free of debris. Apply a small amount of the breakable thread adhesive to the clamping disc threads and install.

8. Rotate the counterweight until the connecting rod is in mid-stroke and then tighten the clamping disc. Do not over tighten the clamping disc.

Note Over tightening of the clamping disc will significantly reduce diaphragm life. Tighten enough to avoid contact with the head. If a significant amount of torque is required to tighten, first re-check to see if the threads are clear, then check that the connection rod support disc ("H") is properly seated on the connection rod. Over-torque of the clamping disc must never be a way to avoid contact with the head. ▲

9. Remove the two temporary aligning screws and re-install the heads on to the pump body. The correct head bolt torque range is 20-30 inch-pounds.

10. Turn the counterweight ("M") through at least one full revolution to check for smooth operation.

11. Re-install the housing cover and check the pump for correct performance.

Valve Replacement

Use the following procedure to replace the valve.

1. With the head off the pump, unscrew the socket head cap screws with M4 lock washers ("S") to remove the head lid ("T") and gasket ("V").

2. Loosen the single pan head screw, washers and nut ("P") and remove the two stainless steel reed valves ("Q"). If necessary, hold the nut in place with a nut-driver.

3. Lightly clean the valve seat area of debris or deposits with fine-grade steel wool. This area must be clean and smooth, without pits or scratches. Do not scratch the head plate. Finish the cleaning with alcohol and then air-dry the parts.

4. Lay the two replacement reed valves on a flat surface to the direction of any slight bend.

5. Lay the replacement reed valves in place, center bowed out (see valve installation), and tighten the pan head screw, both washers, and the nut. Be certain that the reed valves lay straight and smooth with

clearance from the recessed edge to prevent sticking. If a reed valve curves away from the valve hole, remove the screw, flip the valve over and reinstall.

6. Match the holes of the PTFE head gasket ("V") with the head seal surface, install the head lid, and tighten the two center bolts with M4 lock washers first and then cross alternate tightening of the perimeter bolts. Re-tighten the two center bolts after the other bolts are tight.

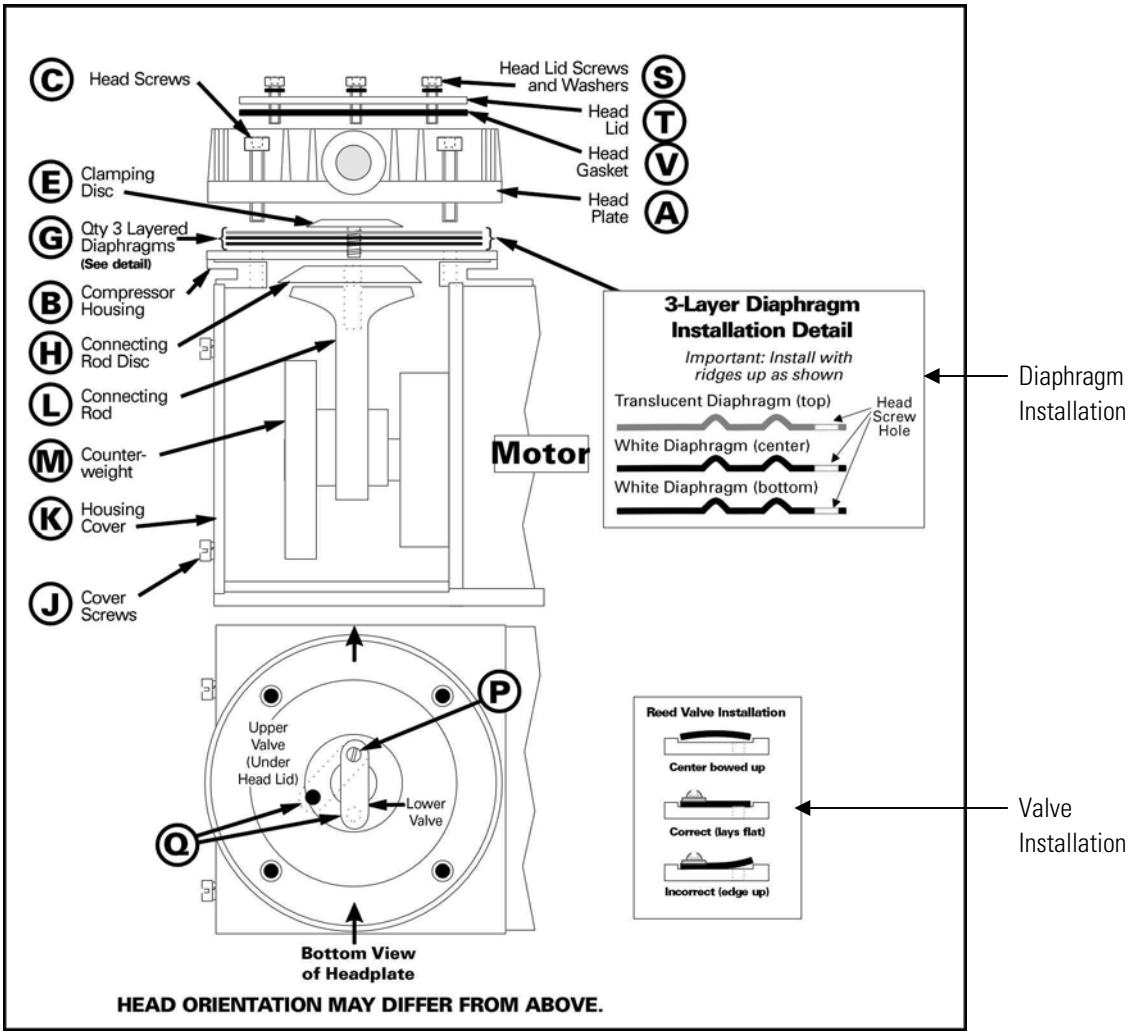

Figure 7–7. Vacuum Pump – Head Plate and Motor View

Bypass Pump Replacement

Use the following procedure to replace the bypass pump (Figure 7–8).

Equipment Required:

- Pump
- Nut driver
- Philips screwdriver

Equipment Damage Some internal components can be damaged by small amounts of static electricity. A properly grounded antistatic wrist strap must be worn while handling any internal component. ▲

1. Turn instrument OFF, unplug the power cord, and remove the cover.
2. Disconnect the pump power cable from the AC PUMP connector on the measurement interface board.
3. Remove both lines from the pump.
4. Loosen the four captive screws holding the pump bracket to the shock mounts and remove the pump assembly and the shock mounts.
5. Invert the pump assembly, remove the two pump mounting screws located on the bottom side of the pump bracket, and remove the bracket from the pump.
6. Install the new pump by following the previous steps in reverse.
7. Perform a leak test as described in the “Preventive Maintenance” chapter.

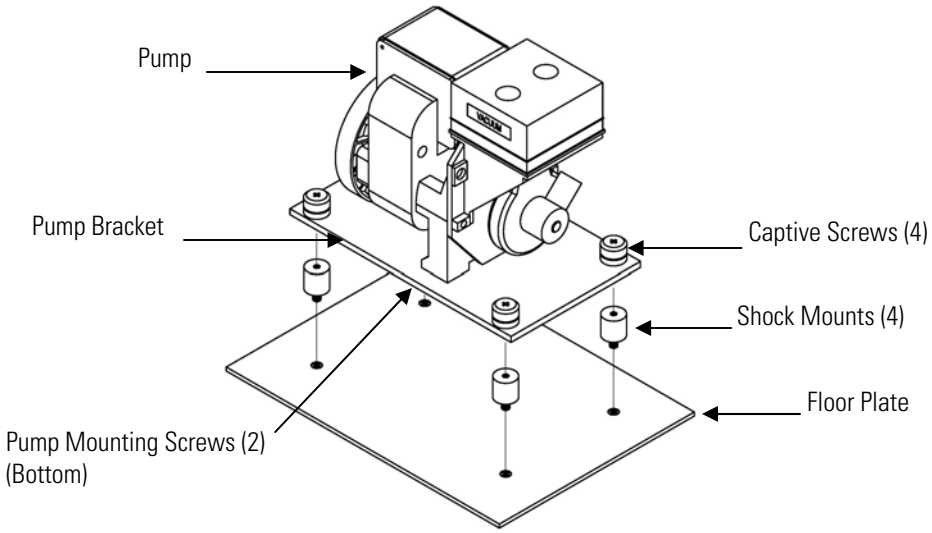

Figure 7–8. Replacing the Bypass Pump

Fan Replacement

Use the following procedure to replace the fan (Figure 7–9).

Equipment Required:

Fan

Philips screwdriver

Equipment Damage Some internal components can be damaged by small amounts of static electricity. A properly grounded antistatic wrist strap must be worn while handling any internal component. ▲

1. Turn instrument OFF, unplug the power cord, and remove the cover.
2. Remove the fan guard from the fan and remove the filter.
3. Pull the power connectors off the fan.
4. Remove the four fan mounting screws and remove the fan.
5. Install a new fan following the previous steps in reverse.

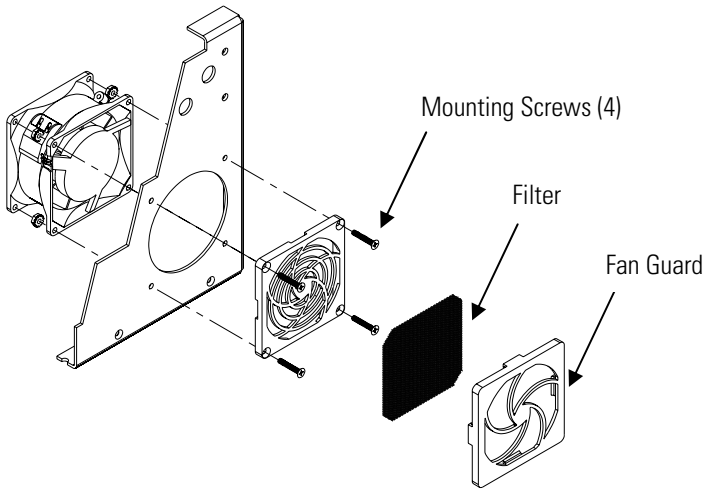

Figure 7–9. Replacing the Fan

PMT Cooler and Reaction Chamber Assembly Replacement

Use the following procedure to replace the PMT cooler and reaction chamber assembly (see Figure 7–10).

Equipment Required:

PMT cooler

Wrench, 7/16-inch

Wrench, 9/16-inch

Nut driver, 1/4-inch

Philips screwdriver

Wire cutters

Equipment Damage Some internal components can be damaged by small amounts of static electricity. A properly grounded antistatic wrist strap must be worn while handling any internal component. ▲

1. Refer to "Removing the Measurement Bench and Lowering the Partition Panel" in this chapter to lower the partition panel, then proceed to the next step below.

2. Disconnect the reaction chamber connector from the temperature control board.

3. Snap off the temperature control board from the board mounts.

4. Remove the four screws securing the cooler shroud to the rear panel and remove the shroud.

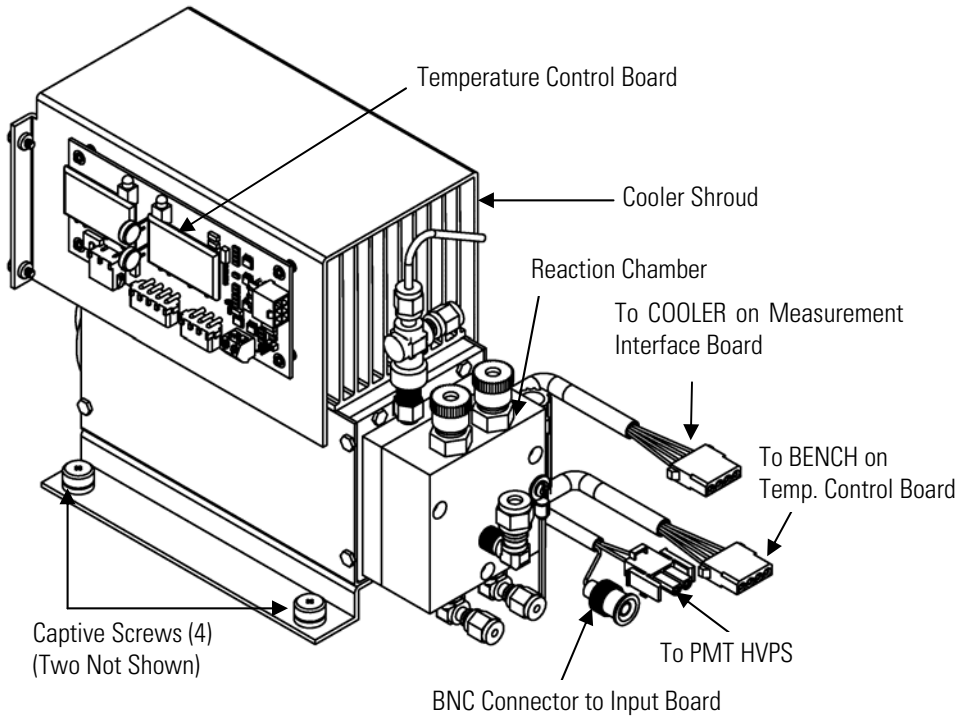

Figure 7–10. PMT Cooler and Reaction Chamber

5. Disconnect plumbing connections from the reaction chamber.

6. Disconnect the cables from the PMT high voltage power supply, the input board, and the measurement interface board. Remove all tie-wraps securing the cables.

7. Loosen four captive screws holding cooler to floor plate and remove the cooler assembly with the reaction chamber.

Note If only the cooler is being replaced, remove the PMT and reaction chamber from the old cooler and install them on the new cooler. ▲

8. Install new cooler by following previous steps in reverse.

Note Fasten knurled fittings on reaction chamber finger tight. ▲

Make sure that the heat shrink covered tubing between the reaction chamber and the converter is light tight at the connections. ▲

9. Re-install the measurement bench. Refer to "Removing the Measurement Bench and Lowering the Partition Panel" in this chapter.

Photomultiplier Tube Replacement

Use the following procedure to replace the PMT tube.

Equipment Required:

Photomultiplier tube and PMT base

Nut driver, 5/16-inch

Flat blade screwdriver

Philips screwdriver, small

Equipment Damage Some internal components can be damaged by small amounts of static electricity. A properly grounded antistatic wrist strap must be worn while handling any internal component. ▲

1. Turn instrument OFF, unplug the power cord, and remove the cover.

2. Disconnect the high voltage cable from the PMT power supply and unplug the BNC cable from the Input Board.

3. Remove six external screws holding PMT cover plate and the four screws holding the PMT shroud to the panel and remove the PMT cover plate (Figure 7–11). If the cooler fan is attached, unplug the fan power cord if necessary.

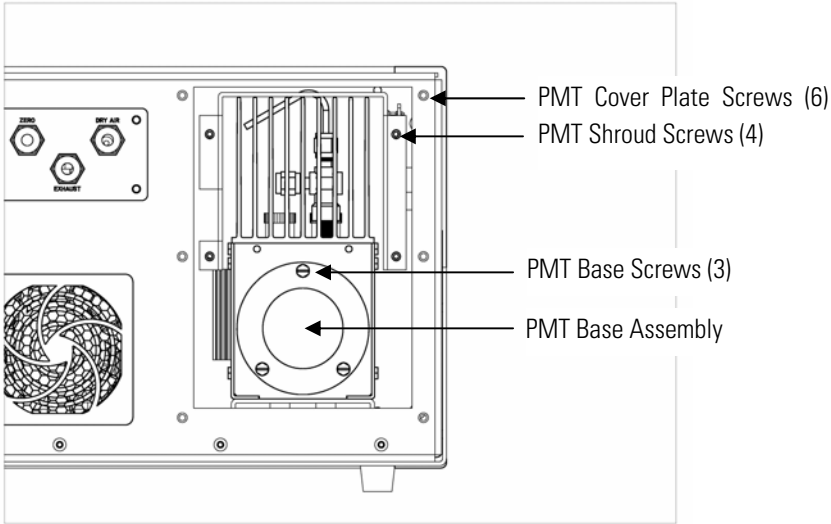

Figure 7–11. Replacing the PMT

4. Remove the three retaining screws holding PMT base assembly to the cooler using a 5/16-inch nut driver.

Equipment Damage Do not point the photomultiplier tube at a light source. This can permanently damage the tube. ▲

5. Pull the PMT and PMT base from cooler assembly by twisting it slightly back and forth.

6. To install PMT, follow previous steps in reverse making sure to backfill the cooler with dry air or nitrogen prior to replacing the PMT.

7. Perform a photomultiplier tube calibration. See "PMT Voltage Adjustment" in the "Operation" chapter.

PMT High Voltage Power Supply Replacement

Use the following procedure to replace the PMT high voltage power supply (Figure 7–12).

Equipment Required:

PMT high voltage power supply

Nut driver, 1/4-inch

Philips screwdriver

Equipment Damage Some internal components can be damaged by small amounts of static electricity. A properly grounded antistatic wrist strap must be worn while handling any internal component. ▲

1. Turn instrument OFF, unplug the power cord, and remove the cover.

2. Disconnect the two PMT high voltage supply cables.

3. Loosen the two retaining screws securing the assembly bracket to the floor plate and slide the assembly towards the rear slightly and lift it off the base screws.

4. Loosen two screws on the input box assembly and lift the input box assembly off the power supply.

5. Remove the four screws securing the power supply to the bracket and remove the power supply.

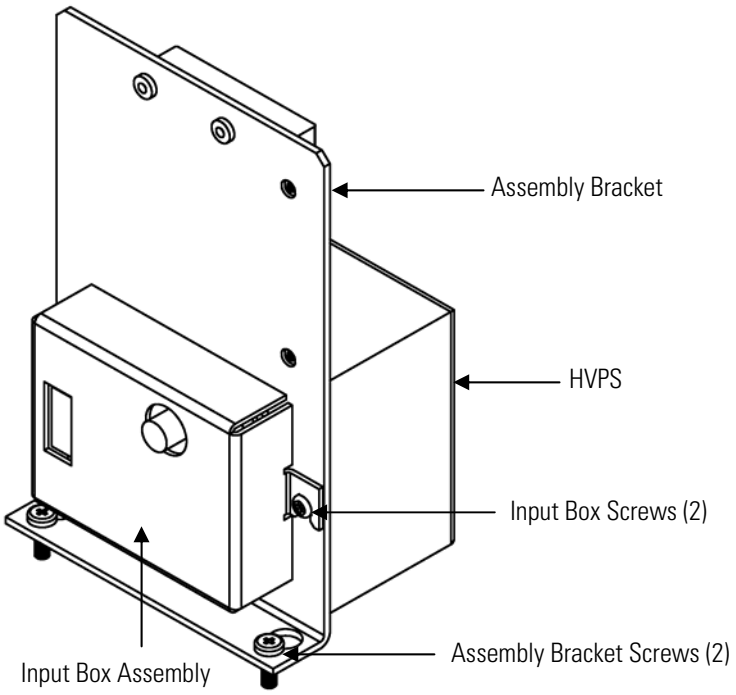

Figure 7–12. Replacing the PMT HVPS

6. To install the power supply, follow the previous steps in reverse.

7. Recalibrate the instrument. Refer to the calibration procedures in the "Calibration" chapter.

PMT Voltage Adjustment

Use the following procedure to adjust the PMT voltage.

WARNING The service procedures in this manual are restricted to qualified service representatives. ▲

1. Select the NO, DIF, and NO_y ranges. Refer to "Range Menu" in the "Operation" chapter.

2. Set the PREREACTOR BKG, NO BKG, and NO_y BKG calibration factors to 0.0. Refer to "Calibration Factors Menu" in the "Operation" chapter.

3. Set the NO COEF, NO_y COEF, and DIF COEF to 1.000.

4. Set the Averaging Time to 10 seconds. Refer to "Averaging Time" in the "Operation" chapter.

5. Connect the calibration gas and allow the instrument to sample calibration gas until the reading stabilizes.

6. From the Main Menu, press [↓] to scroll to Service > press [↵] > [↓] to scroll to **PMT Voltage Adjustment** > and press [↵].

   The Set PMT Voltage screen appears.

Note If Service Mode is not displayed, refer to "Accessing the Service Mode" on page 7-4, then return to the beginning of this step. ▲

7. At the Set PMT Voltage screen, use [↑] [↓] to increment/decrement the counts until the instrument displays the calibration gas concentration value.

Reaction Chamber Cleaning or Removal

Use the following procedure to clean or remove the reaction chamber (see Figure 7–13).

Equipment Required:

Allen Wrench, 9/64-inch

Wrench, 7/16-inch

Wrench, 9/16-inch

Equipment Damage Some internal components can be damaged by small amounts of static electricity. A properly grounded antistatic wrist strap must be worn while handling any internal component. ▲

1. Remove PMT cooler as described in "PMT Cooler and Reaction Chamber Assembly Replacement" in this chapter.

2. Disconnect all plumbing connections from the reaction chamber.

3. Remove the three socket head screws fastening front of reaction chamber to rear (Figure 7–13). This exposes the inner surfaces of both sections of the reaction chamber and the quartz window. To clean these surfaces use cotton swabs and methanol.

4. To continue removing rear of reaction chamber remove the three socket head screws holding it to cooler, being careful to keep quartz window and red filter in cooler body.

5. To reinstall reaction chamber, follow previous steps in reverse, making sure to backfill the cooler with dry air or nitrogen prior to installing reaction chamber.

6. Re-install the measurement bench. Refer to "Removing the Measurement Bench and Lowering the Partition Panel" in this chapter.

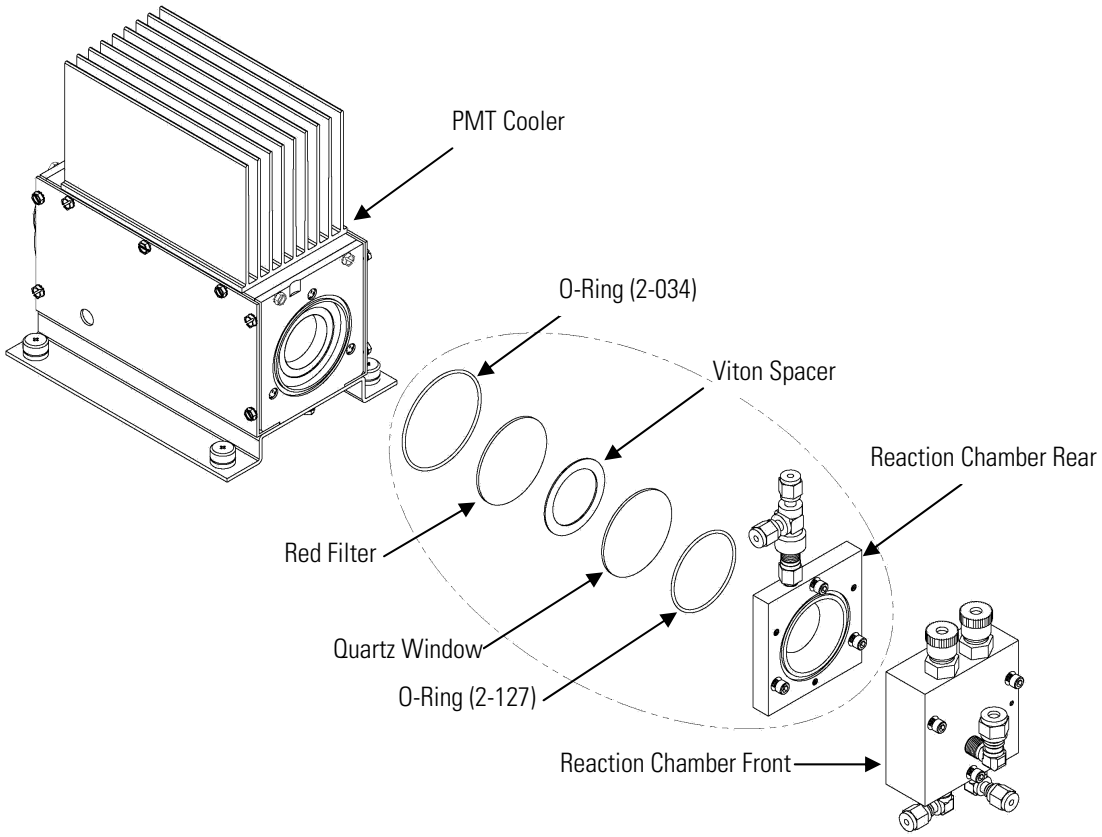

Figure 7–13. Cleaning or Removing the Reaction Chamber

External Converter Replacement

Use the following procedure to replace the converter (Figure 7–14).

Equipment Required:

External Converter

Wrench, 7/16-inch

Wrench, 9/16-inch

Wrench, 1/2-inch

Wrench, 5/8-inch

Screwdriver

Nut driver, 1/4-inch

Nut driver, 5/16-inch

CAUTION Avoid contact with converter heated components. Allow converter to cool to room temperature before handling converter components. ▲

Equipment Damage Some internal components can be damaged by small amounts of static electricity. A properly grounded antistatic wrist strap must be worn while handling any internal component. ▲

1. Turn instrument OFF, unplug the power cord, and remove the cover.
2. Allow converter to cool to room temperature to prevent contact with heated components.
3. Disconnect plumbing at converter inlet and outlet.
4. Disconnect thermocouple leads and heater connector from temperature control board.
5. Loosen the four captive screws holding converter housing to floor plate.

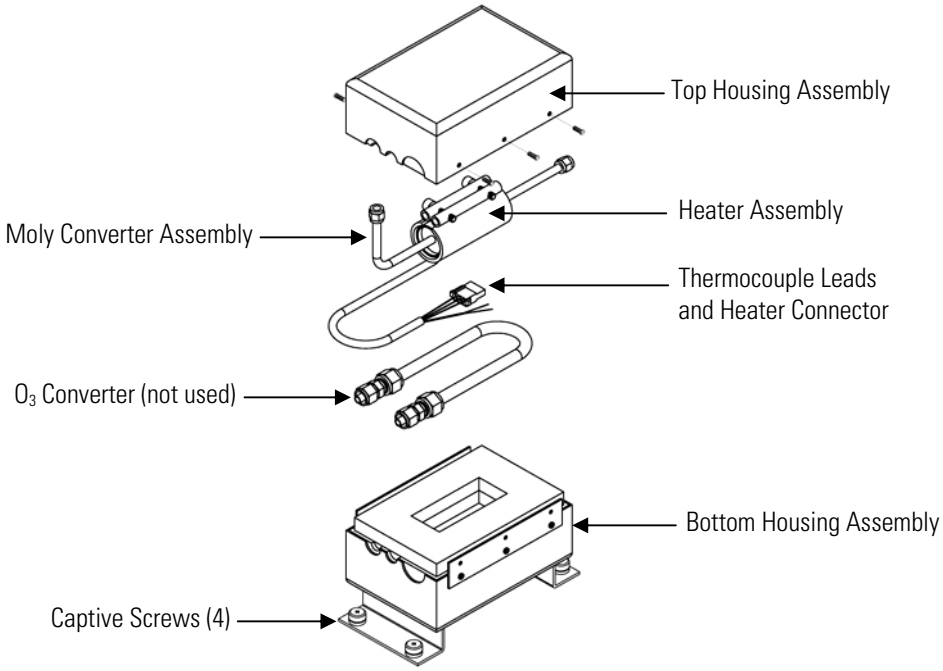

Figure 7–14. External Molybdenum Converter Assembly

6. Remove the six screws holding the top housing assembly to the bottom half.

7. Remove the converter cartridge/heater assembly from the bottom housing assembly.

8. Loosen the heater clamp, pry heater apart no wider than necessary and remove the converter cartridge noting the proper orientation of heater wires and thermocouple probe.

9. To replace converter, follow previous steps in reverse. **Note** Be sure to wrap the O_3 converter tube snugly around the heater.

Solenoid Valve Replacement

Use the following procedure to replace a solenoid valve (Figure 7–15).

Equipment Required:

Solenoid valve

Wrench, 5/16-inch

Philips screwdriver

Equipment Damage Some internal components can be damaged by small amounts of static electricity. A properly grounded antistatic wrist strap must be worn while handling any internal component. ▲

1. Refer to "Removing the Measurement Bench and Lowering the Partition Panel" in this chapter to lower the partition panel, then proceed to the next step below.

2. Disconnect solenoid from the Measurement Interface board. Note electrical connections to facilitate re-connection.

3. Remove plumbing from solenoid. Note plumbing connections to facilitate re-connection.

4. Pull solenoid valve from mounting clip.

5. To replace solenoid, follow previous steps in reverse.

6. Re-install the measurement bench. Refer to "Removing the Measurement Bench and Lowering the Partition Panel" in this chapter.

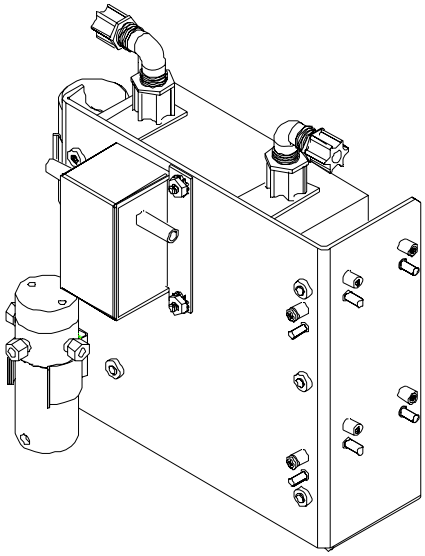

Figure 7–15. Replacing the Solenoid Valve

Ozonator Assembly Replacement

Use the following procedure to replace the ozonator assembly (Figure 7–16).

Equipment Required:

Ozonator assembly

Wrench, 5/8-inch

Philips screwdriver

Equipment Damage Some internal components can be damaged by small amounts of static electricity. A properly grounded antistatic wrist strap must be worn while handling any internal component. ▲

1. Refer to "Removing the Measurement Bench and Lowering the Partition Panel" in this chapter to lower the partition panel, then proceed to the next step below.

2. Carefully disconnect the plumbing at the glass inlet and outlet of the ozonator.

3. Disconnect the stainless steel tubing from the flow transducer.

4. Loosen the four captive screws securing the ozonator bracket to the floor plate.

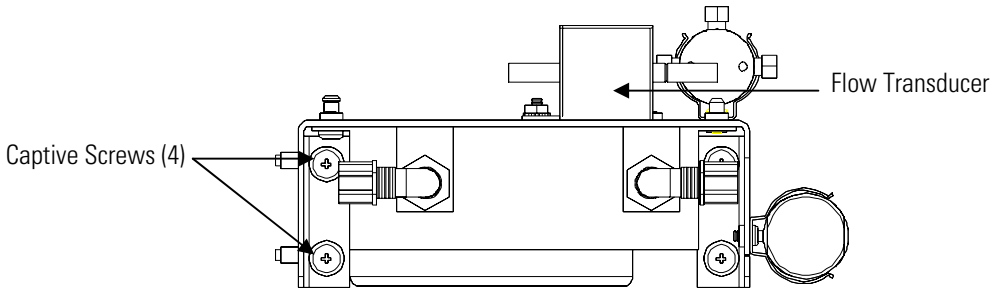

Ozonator – Top View

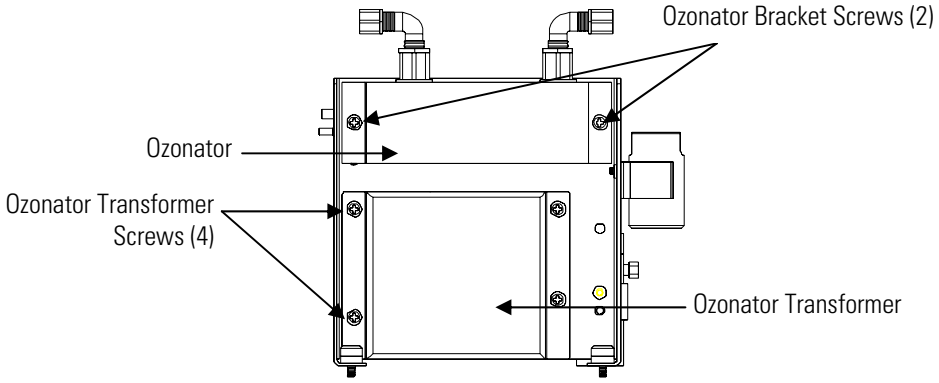

Ozonator – Side View

Figure 7–16. Replacing the Ozonator Assembly

5. Remove the two screws securing the ozonator to the ozonator bracket.

6. Unplug the ozonator from the ozonator transformer by lifting the ozonator straight up.

7. To install the ozonator, follow the previous steps in reverse.

8. Re-install the measurement bench. Refer to "Removing the Measurement Bench and Lowering the Partition Panel" in this chapter.

Ozonator Transformer Replacement

Use the following procedure to replace the ozonator transformer (Figure 7–16).

Equipment Required:

Ozonator transformer

Philips screwdriver

Equipment Damage Some internal components can be damaged by small amounts of static electricity. A properly grounded antistatic wrist strap must be worn while handling any internal component. ▲

1. Turn instrument OFF, unplug the power cord, and remove the cover.
2. Remove the ozonator assembly as described in "Ozonator Assembly Replacement."
3. Disconnect the plug connecting the ozonator transformer to the measurement interface board (OZONATOR connector).
4. Remove the four screws holding the ozonator transformer to the ozonator bracket and remove the ozonator transformer.
5. To install the ozonator transformer, follow the previous steps in reverse.
6. Re-install the measurement bench. Refer to "Removing the Measurement Bench and Lowering the Partition Panel" in this chapter.

Input Board Replacement

Use the following procedure to replace the input board (Figure 7–17).

Equipment Required:

Input board

Philips screwdriver

Equipment Damage Some internal components can be damaged by small amounts of static electricity. A properly grounded antistatic wrist strap must be worn while handling any internal component. ▲

1. Refer to "Removing the Measurement Bench and Lowering the Partition Panel" in this chapter to lower the partition panel, then proceed to the next step below.

2. Disconnect the coaxial cable with BNC connector and the ribbon cable.

3. Loosen the two screws holding the assembly bracket to the floor plate, move the assembly towards the rear, and lift the assembly off the screws.

4. Loosen the two screws holding the input box to the assembly bracket and lift the input box off the screws.

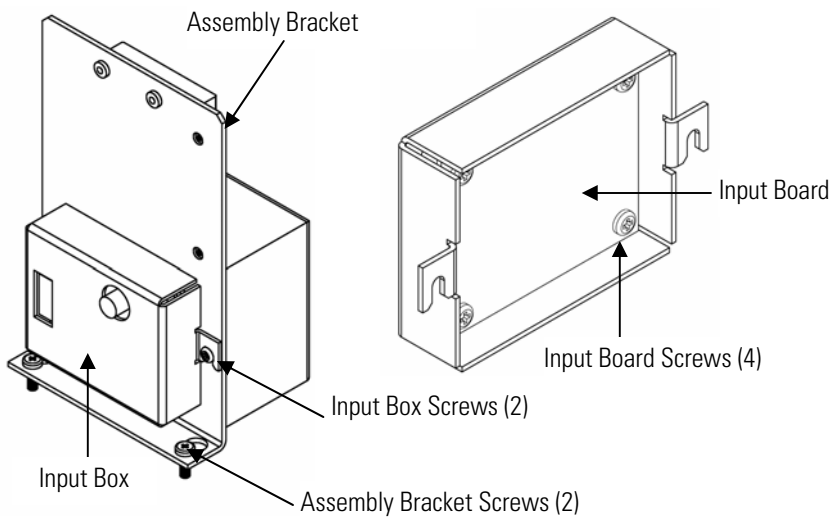

Figure 7–17. Replacing the Input Board

5. Remove the four screws holding the input board to the input box and remove the input board.

6. Install the input board by following the previous steps in reverse.

7. Re-install the measurement bench. Refer to "Removing the Measurement Bench and Lowering the Partition Panel" in this chapter.

8. Perform an input board calibration. See the "Input Board Calibration" procedure that follows.

Input Board Calibration

After replacing the input board, use the following procedure to calibrate the input board.

WARNING The service procedures in this manual are restricted to qualified service representatives. ▲

1. From the Main Menu, press [↓] to scroll to Service > press [↵] > [↓] to scroll to **Input Board Calibration** > and press [↵].

   The Input Board Calibration screen appears.

Note If Service Mode is not displayed, refer to "Accessing the Service Mode" on page 7-4 , then return to the beginning of this step. ▲

2. At the Input Board Calibration screen, press [↵] to select Manual Input Cal, and press [↵] to calibrate.

   The screen displays the frequency at GAIN 1.

3. Make a note of the FREQ value displayed at GAIN 1, then press [←] or [→] to change the GAIN to 100.

4. At the GAIN 100 screen, use [↑] [↓] to increment the D/A counts until the FREQ value matches or is slightly above (within 50 counts) the value noted in the previous step.

5. Press [↵] to store the value.

   The screen flashes **Calculating - Please Wait!** and **Done - Values Saved!** messages.

DC Power Supply Replacement

Use the following procedure to replace the DC power supply (Figure 7–18).

Equipment Required:

DC power supply

Philips screwdriver

Equipment Damage Some internal components can be damaged by small amounts of static electricity. A properly grounded antistatic wrist strap must be worn while handling any internal component. ▲

1. Turn instrument OFF, unplug the power cord, and remove the cover.

2. Disconnect all the power supply electrical connections. Note connector locations to facilitate re-connection.

3. Loosen the captive screw securing the power supply to the chassis plate and lift out the power supply.

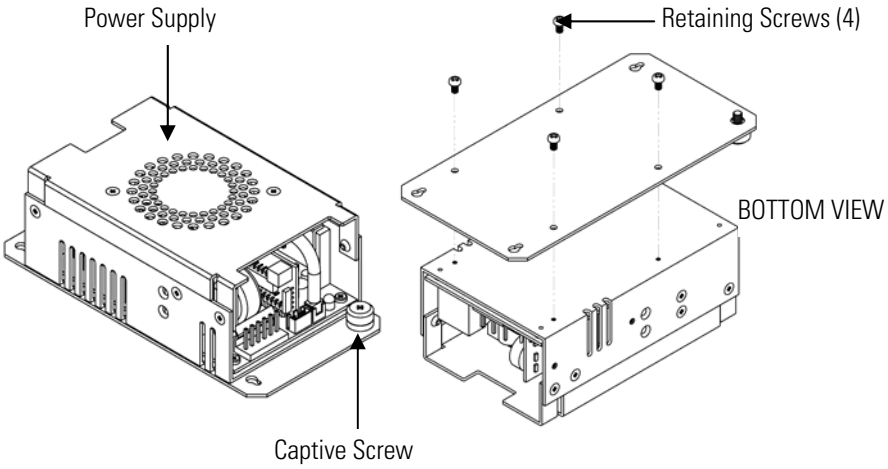

Figure 7–18. Replacing the DC Power Supply

4. Turn the power supply upside down and remove the four retaining screws securing the power supply to the power supply plate and remove the power supply.

5. To install the DC power supply, follow the previous steps in reverse.

Analog Output Testing

The analog outputs should be tested if the concentration value on the front panel display disagrees with the analog outputs. To check the analog outputs, you connect a meter to an analog output channel (voltage or current) and compare the meter reading with the output value set on the Test Analog Outputs screen.

Equipment Required:

Multimeter

Use the following procedure to test the analog outputs.

1. Connect a meter to the channel to be tested. Figure 7–19 shows the analog output pins and Table 7–4 identifies the associated channels.

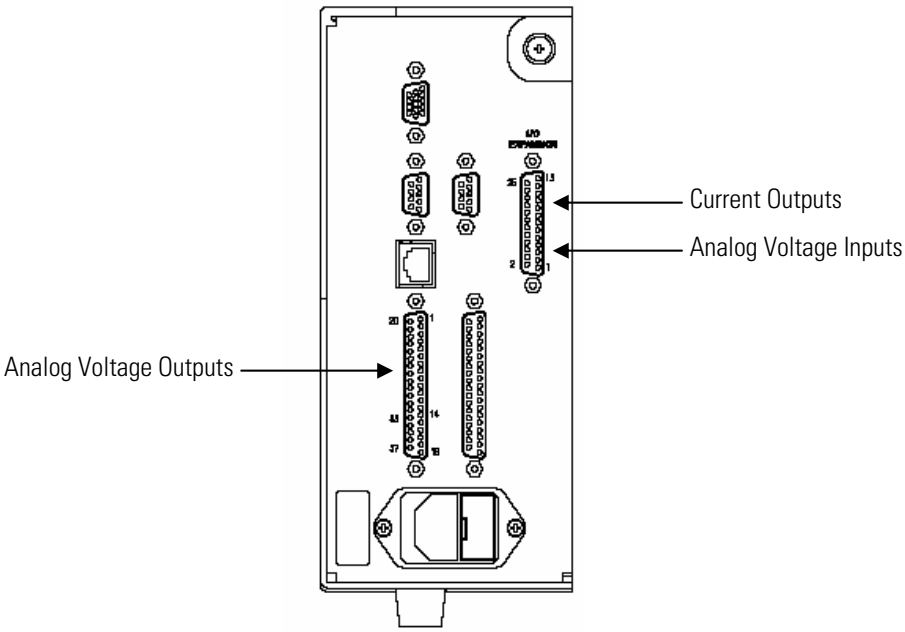

Figure 7–19. Rear Panel Analog Input and Output Pins

2. From the Main Menu, press [↓] to scroll to Diagnostics, > press [↵] > [↓] to scroll to Test Analog Outputs, and press [↵].

   The Test Analog Outputs screen appears.

3. Press [↓] to scroll to the desired channel corresponding to the rear panel terminal pins where the meter is connected, and press [↵].

   The Set Analog Outputs screen appears.

4. Press [↓] to set the output to zero.

   The Output Set To line displays Zero.

5. Check that the meter is displaying the zero value. If the meter reading differs by more than one percent, the analog outputs should be adjusted. Refer to the "Analog Output Calibration" procedure that follows.

6. Press [↑] to set the output to full-scale.

   The Output Set To line displays Full-Scale.

7. Check that the meter is displaying a full-scale value. If the meter reading differs by more than one percent, the analog outputs should be adjusted. Refer to the "Analog Output Calibration" procedure that follows.

8. Press [↵] to reset the analog outputs to normal.

Table 7–4. Analog Output Channels and Rear Panel Pin Connections

Voltage Channel	Pin	Current Channel	Pin
1	14	1	15
2	33	2	17
3	15	3	19
4	34	4	21
5	17	5	23
6	36	6	25
Ground	16, 18, 19, 35, 37	Current Output Return	13, 16, 18, 20, 22, 24

Table 7–5. Analog Input Channels and Rear Panel Pin Connections

Input Channel	Pin
1	1
2	2
3	3
4	5
5	6
6	7
7	9
8	10
Ground	4, 8, 11, 14

Analog Output Calibration

Use the following procedure to calibrate the analog outputs if a meter reading in the "Analog Output Testing" procedure differed by more than one percent or after replacing the optional I/O expansion board.

Equipment Required:

Multimeter

1. Connect a meter to the channel to be adjusted and set to voltage or current as appropriate. Figure 7–19 shows the analog output pins and Table 7–4 identifies the associated channels.

2. From the Main Menu, press [↓] to scroll to Service > press [↵] > [↓] to scroll to Analog Output Calibration > and press [↵].

   The Analog Output Cal screen appears.

Note If Service Mode is not displayed, refer to "Accessing the Service Mode" on page 7-4 , then return to the beginning of this step. ▲

3. At the Analog Output Cal screen, press [↓] to scroll to the desired voltage channel or current channel corresponding to the rear panel terminal pin where the meter is connected, then press [↵].

4. With the cursor at Calibrate Zero, press [↵].

   The Analog Output Cal line displays Zero

Note When calibrating the analog output, always calibrate zero first and then calibrate full-scale. ▲

5. Use [↑] [↓] until the meter reads 0.0V (or 0.0 or 4.0 mA for a current channel), then press [↵] to save the value.

6. Press [■] to return to the previous screen.

7. Press [↓] [↵] to select Calibrate Full-Scale.

8. Use [↑] [↓] until the meter reads the value shown in the Set Output To line, then press [↵] to save the value.

Analog Input Calibration

Use the following procedures to calibrate the analog inputs after replacing the optional I/O expansion board. These procedures include selecting analog input channels, calibrating them to zero volts, and then calibrating them to full-scale using a known voltage source.

Calibrating the Input Channels to Zero Volts

Use the following procedure to calibrate the input channels to zero volts.

1. From the Main Menu, press [↓] to scroll to Service, press [↵] > [↓] to scroll to Analog Input Calibration, and press [↵].

   The Analog Input Cal screen displays.

Note If Service Mode is not displayed, refer to "Accessing the Service Mode" on page 7-4, then return to the beginning of this step. ▲

2. At the Analog Input Cal screen, press [↓] to scroll to a channel, and press [↵].

3. With the cursor at Calibrate Zero, press [↵].

   The screen displays the input voltage for the selected channel.

4. Make sure that nothing is connected to the channel input pins and press [↵] to calibrate the input voltage on the selected channel to zero volts.

   The screen displays 0.00 V as the voltage setting.

5. Press [■] > [■] to return to the Analog Input Cal screen and repeat Steps 2 through 4 to calibrate other input channels to zero as necessary.

6. Continue with the "Calibrating the Input Channels to Full-Scale" procedure that follows.

Calibrating the Input Channels to Full-Scale

Use the following procedure to calibrate the input channels to full scale by applying a known voltage to the channels.

Equipment Required:

DC voltage source (greater than 0 volts and less than 10 volts)

1. Connect the known DC voltage source to the input channel (1-8) to be calibrated. Figure 7–19 shows the analog output pins and Table 7–5 identifies the associated channels.

2. From the Main Menu, press [↓] to scroll to Service, press [↵] > [↓] to scroll to Analog Input Calibration, and press [↵].

   The Analog Input Cal screen displays input channels 1-8.

3. At the Analog Input Cal screen, press [↓] to scroll to the channel selected in Step 1, and press [↵].

4. Press [↓] to scroll to Calibrate Full Scale, and press [↵].

   The screen displays the current input voltage for the selected channel.

5. Use [←] [→] and [↑] [↓] to enter the source voltage, and press [↵] to calibrate the input voltage for the selected channel to the source voltage.

6. Press [■] > [■] to return to the input channels display and repeat Steps 3-5 to calibrate other input channels to the source voltage as necessary.

Pressure Transducer Assembly Replacement

Use the following procedure to replace the pressure transducer assembly (Figure 7–20).

Equipment Required:

Pressure transducer assembly

Philips screwdriver

Equipment Damage Some internal components can be damaged by small amounts of static electricity. A properly grounded antistatic wrist strap must be worn while handling any internal component. ▲

1. Turn instrument OFF, unplug the power cord, and remove the cover.

2. Disconnect plumbing from the pressure transducer assembly. Note the plumbing connections to facilitate reconnection.

3. Disconnect the pressure transducer cable.

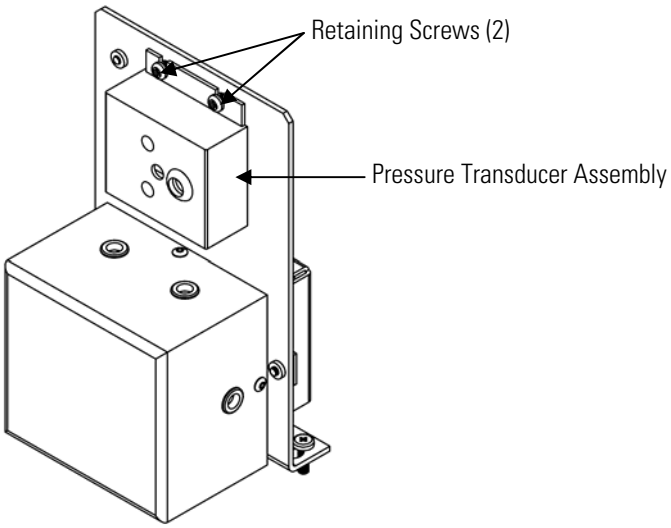

Figure 7–20. Replacing the Pressure Transducer

4. Remove the two pressure transducer assembly retaining screws and remove the pressure transducer assembly.

5. To install the pressure transducer assembly, follow previous steps in reverse.

6. Calibrate the pressure transducer. Refer to the "Pressure Transducer Calibration" procedure that follows.

Pressure Transducer Calibration

Use the following procedure to calibrate the pressure transducer.

Equipment Required:

Vacuum pump

WARNING The service procedures in this manual are restricted to qualified service representatives. ▲

If the equipment is operated in a manner not specified by the manufacturer, the protection provided by the equipment may be impaired. ▲

Equipment Damage Some internal components can be damaged by small amounts of static electricity. A properly grounded antistatic wrist strap must be worn while handling any internal component. ▲

Note An error in the zero setting of the pressure transducer does not introduce a measurable error in the output concentration reading. Therefore, if only a barometer is available and not a vacuum pump, only adjust the span setting. ▲

A rough check of the pressure accuracy can be made by obtaining the current barometric pressure from the local weather station or airport and comparing it to the pressure reading. However, since these pressures are usually corrected to sea level, it may be necessary to correct the reading to local pressure by subtracting 0.027 mm Hg per foot of altitude. ▲

Do not try to calibrate the pressure transducer unless the pressure is known accurately. ▲

1. Remove the cover.

2. Disconnect the tubing from the pressure transducer and connect a vacuum pump known to produce a vacuum less than 1 mm Hg.

3. From the Main Menu, press [↓] to scroll to Service > press [↵] > [↓] to scroll to Pressure Calibration > and press [↵].

   The Pressure Sensor Cal menu appears.

Note If Service Mode is not displayed, refer to "Accessing the Service Mode" on page 7-4 , then return to the beginning of this step. ▲

4. At the Pressure Sensor Cal menu, press [↵] to select **Zero**.

   The Calibrate Pressure Zero screen appears.

5. Wait at least 10 seconds for the zero reading to stabilize, then press [↵] to save the zero pressure value.

6. Disconnect the pump from the pressure transducer.

7. Press [■] to return to the Pressure Sensor Cal menu.

8. At the Pressure Sensor Cal menu, press [↓][↵] to select **Span**.

   The Calibrate Pressure Span screen appears.

9. Wait at least 10 seconds for the ambient reading to stabilize, use [←][→] and [↑][↓] to enter the known barometric pressure, and press [↵] to save the pressure value.

10. Reconnect the instrument tubing to the pressure transducer.

11. Install the cover.

Temperature Control Board Replacement

Use the following procedure to replace the temperature control board (Figure 7–10).

Equipment Required:

Temperature control board

Small flat-blade screwdriver

Equipment Damage Some internal components can be damaged by small amounts of static electricity. A properly grounded antistatic wrist strap must be worn while handling any internal component. ▲

1. Turn instrument OFF, unplug the power cord, and remove the cover.

2. Disconnect all connectors from the temperature control board. Use a small flat-blade screwdriver to loosen the two screws securing the CONV TC cable. Note that the red wire is towards the rear and the yellow wire is towards the front.

3. Snap off the board from the board mounts.

4. To install the temperature control board, follow previous steps in reverse.

Ambient Temperature Calibration

Use the following procedure to calibrate the ambient internal temperature for the instrument.

Equipment Required:

Calibrated thermometer or 10K ±1% Resistor

WARNING The service procedures in this manual are restricted to qualified service representatives. ▲

If the equipment is operated in a manner not specified by the manufacturer, the protection provided by the equipment may be impaired. ▲

Equipment Damage Some internal components can be damaged by small amounts of static electricity. A properly grounded antistatic wrist strap must be worn while handling any internal component. ▲

1. Remove the instrument cover.

2. Tape the thermistor (plugged into the measurement interface board) to a calibrated thermometer (Figure 7–2).

Note Since the thermistors are interchangeable to an accuracy of ±0.2 °C, and have a value of 10K ohms at 25 °C, an alternate procedure is to connect an accurately known 10K resistor to the thermistor input (AMB TEMP) on the measurement interface board, and enter the temperature reading. ▲

A 1 °C change corresponds to a ±5% change in resistance, thus this alternative procedure can be quite accurate as a check; however, it clearly is not NIST traceable. ▲

3. From the Main Menu, press [↓] to scroll to Service > press [↵] > [↓] to scroll to **Temperature Calibration** > and press [↵].

   The Calibrate Ambient Temperature screen appears.

Note If Service Mode is not displayed, refer to "Accessing the Service Mode" on page 7-4 , then return to the beginning of this step. ▲

4. Wait at least 10 seconds for the ambient reading to stabilize, use [←] [→] and [↑] [↓] to enter the known temperature, and press [↵] to save the temperature value.

5. Install the cover.

Fuse Replacement

Use the following procedure to replace the fuse.

Equipment Required:

Replacement fuses:

250VAC, 4 Amp, SlowBlow (for 100VAC and 110VAC models)

250VAC, 2 Amp, SlowBlow (for 220-240VAC models)

1. Turn instrument OFF and unplug the power cord.

2. Remove fuse drawer, located on the AC power connector.

3. If either fuse is blown, replace both fuses.

4. Insert fuse drawer and reconnect power cord.

I/O Expansion Board (Optional) Replacement

Use the following procedure to replace the optional I/O expansion board (Figure 7–21).

Equipment Required:

I/O expansion board

Nut driver, 3/16-inch

Equipment Damage Some internal components can be damaged by small amounts of static electricity. A properly grounded antistatic wrist strap must be worn while handling any internal component. ▲

1. Turn instrument OFF, unplug the power cord, and remove the cover.

2. Unplug the I/O expansion board cable from the EXPANSION BD connector on the motherboard.

3. Remove the two standoffs holding the I/O expansion board connector to the rear panel (Figure 7–22).

4. Pop off the board from the mounting studs and remove the board.

5. To install the I/O expansion board, follow previous steps in reverse.

6. Calibrate the analog current outputs and analog voltage inputs as defined earlier in this chapter.

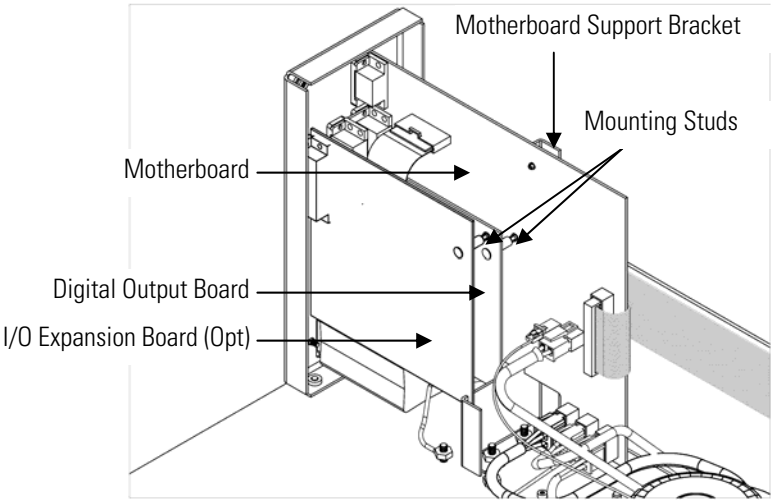

Figure 7–21. Replacing the I/O Expansion Board (Optional)

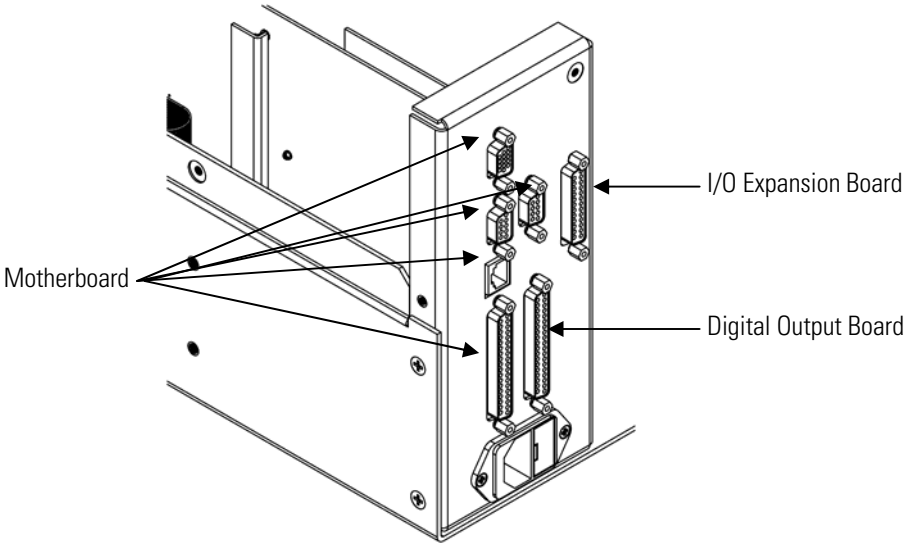

Figure 7–22. Rear Panel Board Connectors

Digital Output Board Replacement

Use the following procedure to replace the digital output board (Figure 7–21).

Equipment Required:

Digital output board

Nut driver, 3/16-inch

Equipment Damage Some internal components can be damaged by small amounts of static electricity. A properly grounded antistatic wrist strap must be worn while handling any internal component. ▲

1. Turn instrument OFF, unplug the power cord, and remove the cover.

2. Remove the I/O expansion board (optional), if used. See the "I/O Expansion Board (Optional) Replacement" procedure in this chapter.

3. Disconnect the digital output board ribbon cable from the motherboard.

4. Using the nut driver, remove the two standoffs securing the board to the rear panel (Figure 7–22).

5. Pop off the digital output board from the mounting studs and remove the board.

6. To install the digital output board, follow previous steps in reverse.

Motherboard Replacement

Use the following procedure to replace the motherboard (Figure 7–23).

Equipment Required:

Motherboard

Philips screwdriver

Nut driver, 3/16-inch

Equipment Damage Some internal components can be damaged by small amounts of static electricity. A properly grounded antistatic wrist strap must be worn while handling any internal component. ▲

1. Turn instrument OFF, unplug the power cord, and remove the cover.

2. Remove the I/O expansion board (optional), if used. See the "I/O Expansion Board (Optional) Replacement" procedure in this chapter.

3. Remove the digital output board. See the "Digital Output Board Replacement" procedure in this chapter.

4. Unplug all connectors from the motherboard. Note connector locations to facilitate reconnection.

5. Using the nut driver, remove the six standoffs securing the board to the rear panel.

6. Pop off the motherboard from motherboard support bracket, and remove the motherboard.

7. To install the motherboard, follow previous steps in reverse.

8. Calibrate the analog voltage outputs as defined earlier in this chapter (all ranges).

Measurement Interface Board Replacement

Use the following procedure to replace the measurement interface board (Figure 7–23).

Equipment Required:

Measurement interface board

Philips screwdriver

Equipment Damage Some internal components can be damaged by small amounts of static electricity. A properly grounded antistatic wrist strap must be worn while handling any internal component. ▲

1. Lower the partition panel, then proceed to the next step below. Refer to "Removing the Measurement Bench and Lowering the Partition Panel" on page 7-10 in this chapter.

2. Unplug all connectors. Note the locations of the connectors to facilitate reconnection.

3. Unscrew the two screws at the top of the measurement interface board. Pop off the measurement interface board from the four mounting studs and remove the board (Figure 7–23).

4. To install the measurement interface board, follow previous steps in reverse.

5. Re-install the measurement bench.

6. Calibrate the PMT voltage, pressure transducer, flow transducer, input board, and ambient temperature sensor as defined earlier in this chapter.

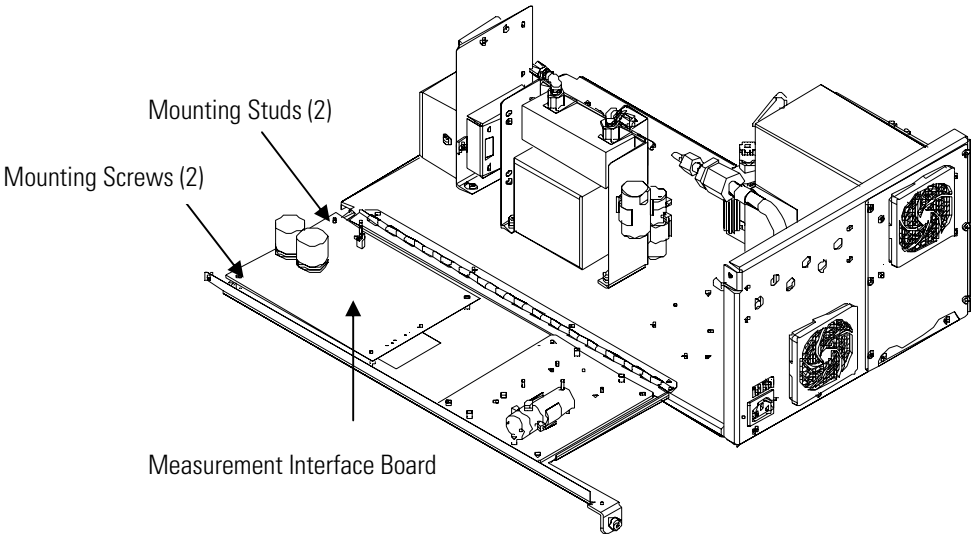

Figure 7–23. Replacing the Measurement Interface Board

External Converter Interface Board Replacement

Use the following procedure to replace the external converter interface board.

Equipment Required:

External converter interface board

Philips screwdriver

Nut driver, 7/16-inch, wrench, or 1/4-inch flat head screwdriver

Equipment Damage Some internal components can be damaged by small amounts of static electricity. A properly grounded antistatic wrist strap must be worn while handling any internal component. ▲

7. Loosen the four screws on the outside of the external converter box, until all of the clamps can be rotated out of the way and open the external converter box door.

8. Locate the external converter interface board, and unplug all connectors. Note the locations of the connectors to facilitate reconnection.

9. Remove the two screws at the top of the external converter interface board. Pop off the external converter interface board from the four mounting studs and remove the board.

10. To install the external converter interface board, follow the previous steps in reverse.

11. Power up the Model 42*i* NO_y, and check that the converter in the external converter box is heating properly. From the Main Menu, press [↓] to scroll to **Diagnostics** > press [↵] > [↓] to scroll to **Temperature** > and press [↵]. External converter temperature should reach 350 °C within one half hour.

Flow Transducer Replacement

Use the following procedure to replace the flow transducer (Figure 7–24).

Equipment Required:

Flow transducer

Equipment Damage Some internal components can be damaged by small amounts of static electricity. A properly grounded antistatic wrist strap must be worn while handling any internal component. ▲

1. Turn instrument OFF, unplug the power cord, and remove the cover.

2. Disconnect the plumbing connections from the flow transducer. Note the plumbing connections to facilitate reconnection.

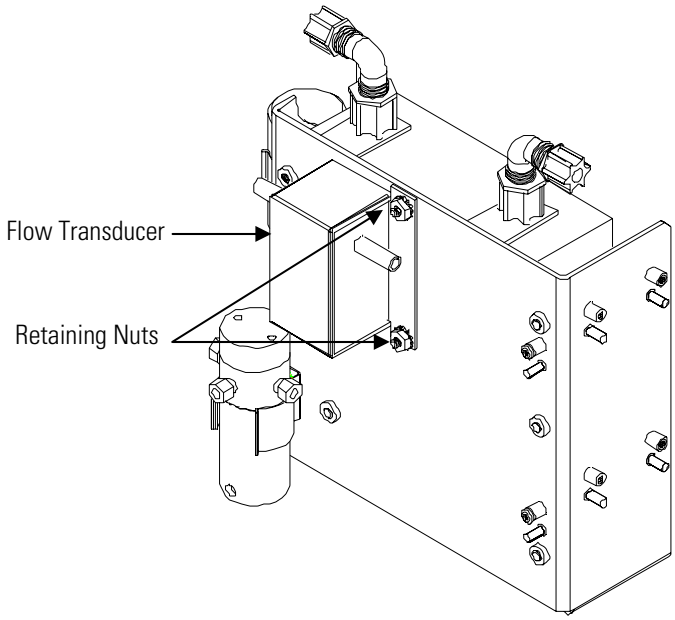

Figure 7–24. Replacing the Flow Transducer

3. Disconnect the flow transducer cable from the measurement interface board.

4. Loosen the two retaining nuts securing the flow transducer to the ozonator bracket and remove the flow transducer.

5. To install the flow transducer, follow previous steps in reverse.

6. Calibrate the flow transducer. Refer to the "Flow Transducer Calibration" procedure that follows.

Flow Transducer Calibration

Use the following procedure to calibrate the flow transducer.

Equipment Required:

Calibrated flow sensor

WARNING The service procedures in this manual are restricted to qualified service representatives. ▲

If the equipment is operated in a manner not specified by the manufacturer, the protection provided by the equipment may be impaired. ▲

Equipment Damage Some internal components can be damaged by small amounts of static electricity. A properly grounded antistatic wrist strap must be worn while handling any internal component. ▲

1. Remove the cover.

2. Disconnect the pump cable from AC PUMP connector on the measurement interface board.

3. From the Main Menu, press [↓] to scroll to Service > press [↵] > [↓] to scroll to **Flow Calibration** > and press [↵].

   The Flow Sensor Cal menu appears.

Note If Service Mode is not displayed, refer to "Accessing the Service Mode" on page 7-4 , then return to the beginning of this step. ▲

4. At the Flow Sensor Cal menu, press [↵] to select **Zero**.

   The Calibrate Flow Zero screen appears.

5. Wait at least 10 seconds for the zero reading to stabilize, then press [↵] to save the zero flow value.

6. Reconnect the pump cable to the AC PUMP connector on the measurement interface board.

7. Connect a calibrated flow sensor at the SAMPLE bulkhead on the rear panel.

8. Press [■] to return to the Flow Sensor Cal menu.

9. At the Flow Sensor Cal menu, press [↓][↵] to select Span.

   The Calibrate Flow Span screen appears.

10. Wait at least 10 seconds for the reading to stabilize, use [←][→] and [↑][↓] to enter the flow sensor reading, and press [↵] to save the value.

11. Install the cover.

Front Panel Board Replacement

Use the following procedure to replace the front panel board (Figure 7–25).

Equipment Required:

Front panel board

Equipment Damage Some internal components can be damaged by small amounts of static electricity. A properly grounded antistatic wrist strap must be worn while handling any internal component. ▲

1. Turn instrument OFF, unplug the power cord, and remove the cover.

2. Remove the three ribbon cables and the two-wire connector from the front panel board.

3. Pop off the board from the two top mounting studs and remove the board by lifting it up and off the slotted bottom support.

4. Replace the front panel board by following previous steps in reverse.

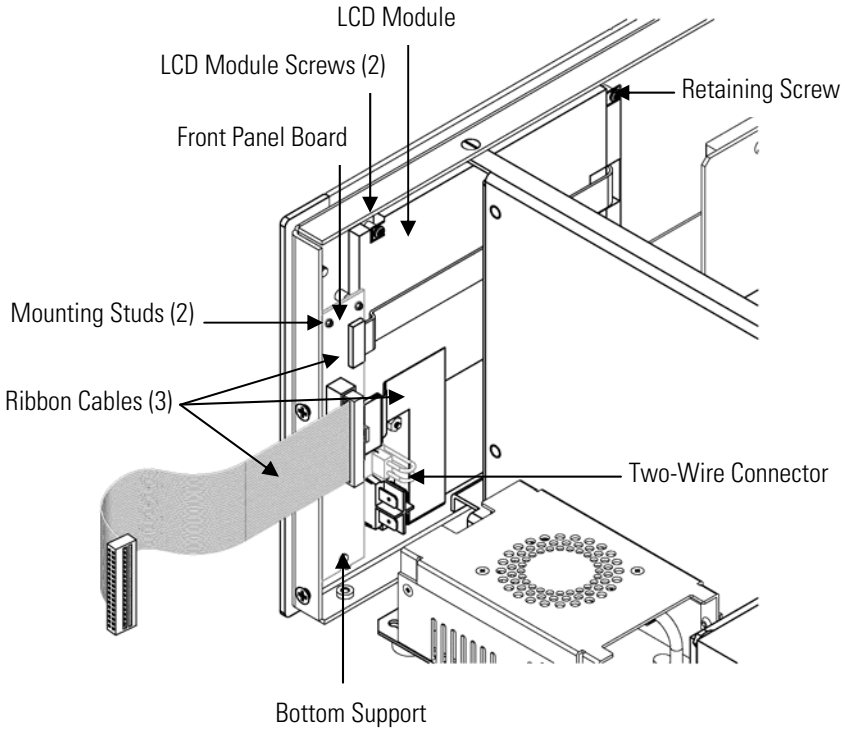

Figure 7–25. Replacing the Front Panel Board and the LCD Module

LCD Module Replacement

Use the following procedure to replace the LCD module (Figure 7–25).

Equipment Required:

LCD module

Philips screwdriver

CAUTION If the LCD panel breaks, do not to let the liquid crystal contact your skin or clothes. If the liquid crystal contacts your skin or clothes, wash it off immediately using soap and water. ▲

Equipment Damage Some internal components can be damaged by small amounts of static electricity. A properly grounded antistatic wrist strap must be worn while handling any internal component. ▲

Do not remove the LCD panel or frame from the module. ▲

The LCD polarizing plate is very fragile, handle it carefully. ▲

Do not wipe the LCD polarizing plate with a dry cloth, it may easily scratch the plate. ▲

Do not use alcohol, acetone, MEK or other Ketone based or aromatic solvents to clean the LCD module, use a soft cloth moistened with a naphtha cleaning solvent. ▲

Do not place the LCD module near organic solvents or corrosive gases. ▲

Do not shake or jolt the LCD module. ▲

1. Turn instrument OFF, unplug the power cord, and remove the cover.
2. Disconnect the ribbon cable and the two-wire connector from the front panel board.
3. Remove the four screws at the corners of the LCD module.
4. Slide the LCD module out towards the right of the instrument.
5. Replace the LCD module by following previous steps in reverse.

Service Locations

For additional assistance, service is available from exclusive distributors worldwide. Contact one of the phone numbers below for product support and technical information or visit us on the web at www.thermo.com/aqi.

1-866-282-0430 Toll Free

1-508-520-0430 International

Chapter 8
System Description

This chapter describes the function and location of the system components, provides an overview of the software structure, and includes a description of the system electronics and input/output connections and functions as follows:

- "Hardware" on page 8-1
- "Software" on page 8-5
- "Electronics" on page 8-7
- "I/O Components" on page 8-11

Hardware

Model 42*i* NO_y hardware components (Figure 8–1) include:

- External converter
- Reaction chamber
- Ozonator
- Prereactor
- Photomultiplier tube
- Photomultiplier tube cooler
- External Pump
- Bypass Pump Assembly
- Teflon particulate filter

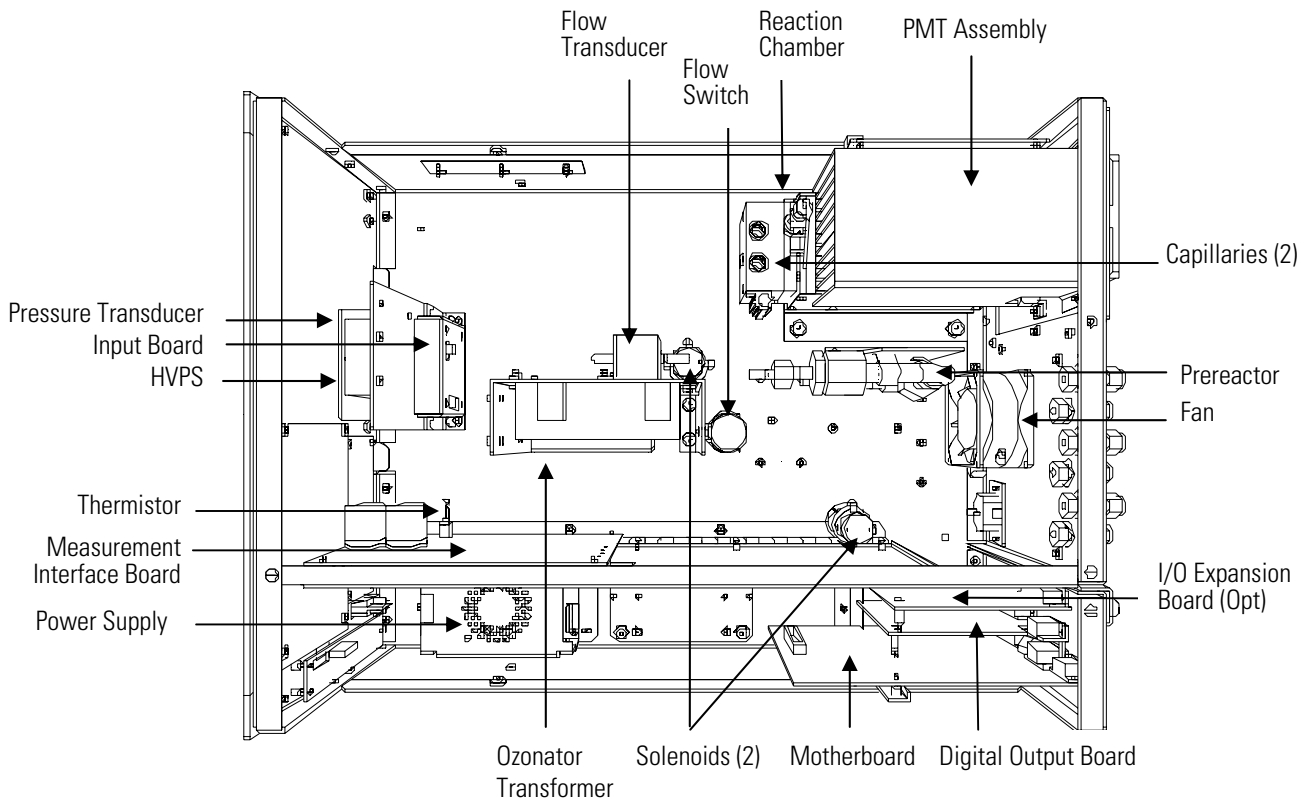

Figure 8–1. Analyzer Hardware Components

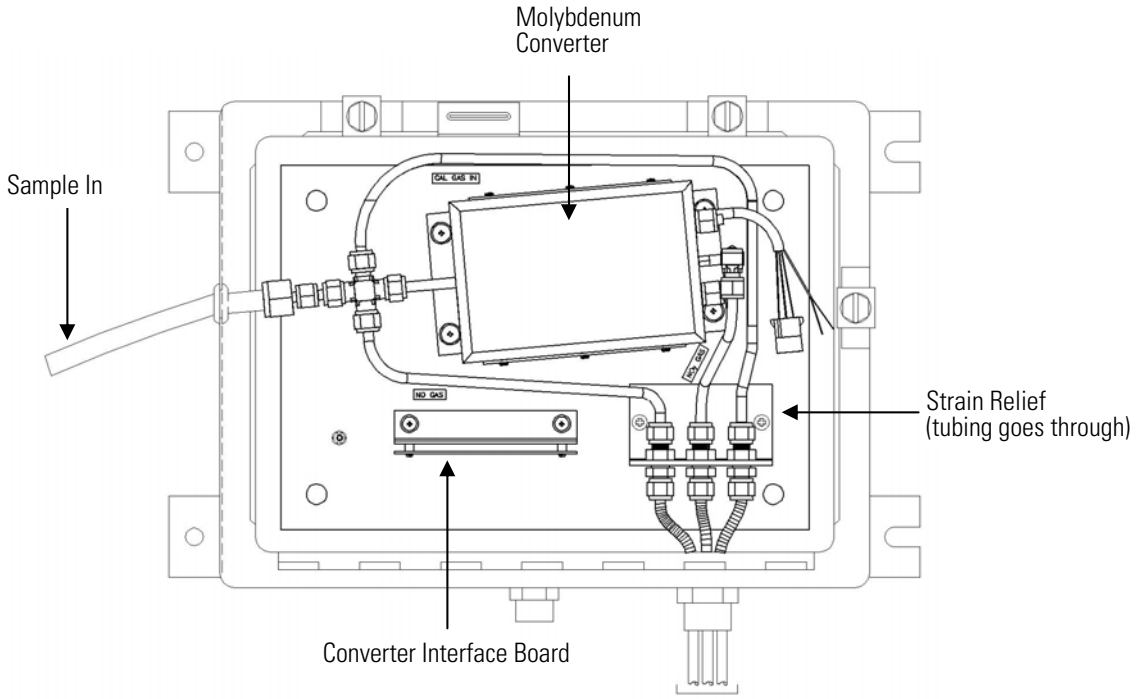

Figure 8–2. External Converter Hardware Components

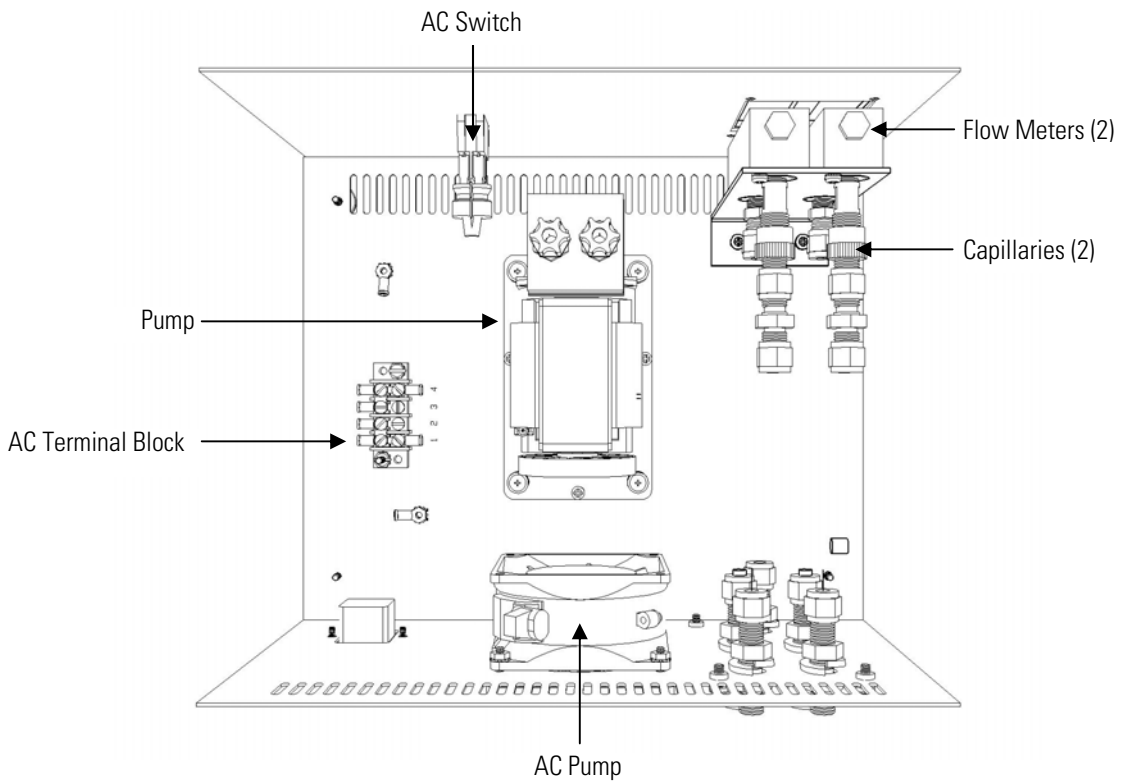

Figure 8–3. Bypass Pump Hardware Components

External Converter

The external converter heats molybdenum to approximately 325 °C in order to convert and detect NO_y species other than NO. The external converter consists of an insulated housing, heater, replaceable cartridge, and a type K thermocouple sensor. Inside the external converter assembly housing is a converter interface board that is used to control and monitor the converter temperature.

Mode Solenoids

The mode solenoid valves switch analyzer operation between the NO mode, NO_y mode, and Prereactor mode. One valve selects raw sample (NO mode) or sample through the external conv (NO_y mode). The other valve selects the prereactor.

Reaction Chamber

The reaction chamber is where the sample reacts with ozone and produces excited NO_2 that gives off a photon of energy when it decays.

The reaction chamber is heated and controlled to approximately 50 °C in order to ensure the greatest instrument stability. The sample and ozone

flow capillaries and a thermistor sensor are also housed in/on the reaction chamber assembly.

Prereactor Solenoid

The prereactor solenoid valve directs the sample either to the reaction chamber or the prereactor.

Optical Filter

The optical filter housed in the reaction chamber limits the spectral region viewed by the detector and eliminates possible interferences due to other chemiluminescent reactions.

Pressure Transducer

The pressure transducer measures the reaction chamber pressure.

Sample Flow Sensor

The sample flow sensor located at the reaction chamber inlet measures the sample flow into the reaction chamber.

Ozonator

The ozonator generates the necessary ozone concentration required for the chemiluminescent reaction. The ozone reacts with the NO in the ambient air sample to produce the electronically excited NO_2 molecules.

Ozonator Flow Switch

The ozonator flow switch located at the ozonator inlet completes an electrical safety circuit when air flows through the sensor to the ozonator. If airflow stops, the flow sensor breaks the electrical circuit to the ozonator and shuts it off to prevent the ozonator from overheating.

Prereactor

The prereactor is plumbed before the reaction chamber so that the sample reacts with ozone prior to the reaction chamber giving a dynamic zero reading for the analyzer. The prereactor is sized so that greater the 99% of a 200 ppb NO sample will react prior to entering the reaction chamber, yet is small enough to allow other potential interferents to pass through to the reaction chamber.

Photomultiplier Tube

The photomultiplier tube (PMT) provides the infrared sensitivity required to detect the NO_2 luminescence resulting from the reaction of the ozone with the ambient air sample.

Optical energy from the reaction is converted to an electrical signal by the PMT and sent to the input board that transmits it to the processor.

Photomultiplier Tube Cooler

The thermoelectric PMT cooler reduces the PMT temperature to approximately -7 °C to minimize dark current and increase instrument sensitivity. The cooler helps to increase zero and span stability over a wide ambient temperature range. The cooler housing also shields the PMT from external electrical and optical interferences.

External Pump

The external vacuum pump draws the reacted gases out of the reaction chamber.

Sample Capillary

The sample capillary along with the pump is used to control flow in the sample line.

Dry Air Capillary

The dry air capillary along with the pump is used to control flow in the dry air line through the ozonator.

Bypass Pump Assembly

The external bypass pump assembly draws the sample from the external converter through the sample line.

Capillaries

The capillaries along with the pump are used to control flow in the sample line.

Teflon Particulate Filter

A 5-10 micron pore size, two-inch diameter Teflon® element is available for the Model 42*i* NO_y. This filter should be installed just prior to the SAMPLE bulkhead. When using a filter, all calibrations and span checks must be performed through the filter.

Software

The processor software tasks are organized into four areas:

- Instrument Control
- Monitoring Signals
- Measurement Calculations
- Output Communication

Instrument Control

Low-level embedded processors are used to control the various functions on the boards, such as analog and digital I/O and heater control. These

processors are controlled over a serial interface with a single high-level processor that also controls the front-panel user interface. The low-level processors all run a common piece of firmware that is bundled with the high-level firmware and loaded on power-up if a different version is detected.

Each board has a specific address that is used to identify to the firmware what functions are supported on that board. This address is also used for the communications between the low-level processors and the high-level processor.

Every tenth of a second the frequency counters, analog I/O, and digital I/O are read and written to by the low-level processor. The counters are accumulated over the past second and the analog inputs are averaged over that second. The high-level processor polls the low-level processors once per second to exchange the measurement and control data.

Monitoring Signals

Signals are gathered from the low-level processors once per second, and then processed by the high-level processor to produce the final measurement values. The one-second accumulated counts representing the NO/NO_y are accumulated and reported for the user-specified averaging time. The measurement is reported every 10 seconds. The one-second average of the other analog inputs are reported directly (no additional signal conditioning is performed by the high-level processor).

In auto mode, every ten seconds the NO/NO_y and Prereactor solenoids are switched and the processor waits three seconds for the reaction chamber to flush and stabilize. After those three seconds, it accumulates the signal counts for seven seconds before again switching the solenoid. In manual NO or manual NO_y modes, every ten seconds the Prereactor solenoid is switched and the same process is applied.

Measurement Calculations

The calculation of the NO and NO_y concentrations is lengthy and uses the high-level processor to provide the most accurate readings. The calculation begins by subtracting the appropriate electronic offset from the seven-second count accumulation. Following this correction, the raw accumulated counts are scaled according to the gain setting of the input board.

Next, the uncorrected NO, NO_y and Prereactor values are determined according to a unique averaging algorithm which minimizes errors resulting from rapidly changing gas concentrations. This algorithm results in NO, NO_y and Prereactor values which are stored in RAM in a circular buffer that holds all the ten second data from the previous five minutes. This data is averaged over the selected time interval, which can be any multiple of ten between 10 and 300.

The background values for NO, NO_y and Prereactor, which are corrected for temperature, are subtracted from their respective averages. The Prereactor value is subtracted from the NO and NOy values to provide dynamically compensated NO and NOy readings. The NO reading is corrected by the stored span factor. The NO_y reading is partially corrected by the span factor, and balance factor. The corrected NO value is subtracted from the partially corrected NO_y value to yield an uncorrected DIF value. The DIF value is then corrected for converter efficiency to give a corrected DIF reading. Finally, the corrected DIF reading is added to the corrected NO reading to yield a fully corrected NO_y value.

Output Communication

The front panel display, serial and Ethernet data ports, and analog outputs are the means of communicating the results of the above calculations. The front panel display presents the NO, DIF, and NO_y concentrations simultaneously. The display is updated every 10 seconds.

The analog output ranges are user selectable via software. The analog outputs are defaulted based on the measurement range. The defaults are calculated by dividing the data values by the full-scale range for each of the three parameters and then multiplying each result by the user-selected output range. Negative concentrations can be represented as long as they are within -5% of full-scale. The zero and span values may be set by the user to any desired value.

Electronics

All electronics operate from a universal switching supply, which is capable of auto-sensing the input voltage and working over the entire operating range.

All heaters and the bypass pump operate on 110VAC. An optional transformer is required if operating on the 210-250VAC or 90-110VAC ranges. The sample pump operates directly from line voltages and is selected appropriately.

An on/off switch controls all power to the instrument and external converter, and is accessible on the front panel.

Motherboard

The motherboard contains the main processor, power supplies, a sub-processor and serves as the communication hub for the instrument. The motherboard receives operator inputs from the front panel mounted function key panel and/or over I/O connections on the rear panel and sends commands to the other boards to control the functions of the instrument and to collect measurement and diagnostic information. The motherboard outputs instrument status and measurement data to the front-panel mounted graphics display and to the rear-panel I/O. The

motherboard also contains I/O circuitry and the associated connector to monitor external digital status lines and to output analog voltages that represent the measurement data. Connectors located on the motherboard include:

External Connectors

External connectors include:

- External Accessory (for external converter assembly)
- RS-232/485 Communications (two connectors)
- Ethernet Communications
- I/O connector with Power Fail Relay, 16 Digital Inputs, and 6 Analog Voltage Outputs.

Internal Connectors

Internal connectors include:

- Function key panel and Display
- Measurement Interface Board Data
- I/O Expansion Board Data
- Digital Output Board
- AC distribution

Measurement Interface Board

The measurement interface board serves as a central connection area for all measurement electronics in the instrument. It contains power supplies and interface circuitry for sensors and control devices in the measurement system. It sends status data to the motherboard and receives control signals from the motherboard.

Measurement Interface Board Connectors

Connectors located on the measurement interface board include:

- Data communication with the motherboard
- 24V and 120VAC power supply inputs
- Fans and solenoid outputs
- Cooler control
- 120VAC outputs for the pump and temperature control board
- Ozonator
- Flow and pressure sensors

- Ambient temperature sensor
- Temperature control board
- PMT high voltage supply
- Measurement input board

External Converter Interface Board

The external converter interface board serves as a central connection area for all measurement electronics in the external converter. It contains power supplies and interface circuitry for the converter heater. It sends status data to the motherboard and receives control signals from the motherboard.

External Converter Interface Board Connectors

Connectors located on the external converter interface board include:

- 120VAC power supply input
- DC/Data
- Converter thermocouple
- Converter heater

Flow Sensor Assembly

The flow sensor assembly consists of a board containing an instrumentation amplifier and a flow transducer with input and output gas fittings. The flow transducer output is produced by measuring the pressure difference across a precision orifice. This unit is used for measuring the flow of sample gas in the measurement system.

Pressure Sensor Assembly

The pressure sensor assembly consists of a board containing an instrumentation amplifier and a pressure transducer with a gas input fitting. The pressure transducer output is produced by measuring the pressure difference between the sample gas pressure and ambient air pressure.

Temperature Control Board

The temperature control board regulates and sets the temperature of the reaction chamber and external converter.

The reaction chamber temperature is measured with a thermistor. The voltage across the thermistor is fed to the main processor for use in calculating and displaying the reaction chamber temperature. The voltage across the thermistor is also compared to a set-point voltage and used to control that the reaction chamber heaters to maintain a constant temperature of 50 °C. Protective circuitry prevents over heating in the event of broken wires to the thermistor.

PMT Power Supply Assembly

The PMT power supply produces high voltage to operate the photo multiplier tube used in the measurement system. The output voltage is adjustable from approximately 600 to 1200 volts under software control.

Input Board Assembly

The input board accepts the current signal from the PMT and converts it to a voltage, which is scaled by a factor of approximately 1, 10, or 100 depending on the full-scale range of the NO channel. The scaled voltage signal is converted to a frequency and sent to the microprocessor.

The input board includes a test signal that can be activated under software control. The test signal is injected at the first stage of the input board in parallel with the PMT input. This allows the input board and the connection to the processor system to be tested and calibrated without using the PMT.

Digital Output Board

The digital output board connects to the motherboard and provides solenoid driver outputs and relay contact outputs to a connector located on the rear panel of the instrument. Ten relay contacts normally open (with power off) are provided which are electrically isolated from each other. Eight solenoid driver outputs (open collector) are provided along with a corresponding +24VDC supply pin on the connector.

I/O Expansion Board (Optional)

The I/O expansion board connects to the motherboard and adds the capability to input external analog voltage inputs and to output analog currents via a connector located on the rear panel of the instrument. It contains local power supplies, a DC/DC isolator supply, a sub-processor and analog circuits. Eight analog voltage inputs are provided with an input voltage range of 0V to 10VDC. Six current outputs are provided with a normal operating range of 0 to 20 mA.

Front Panel Connector Board

The front panel connector board interfaces between the motherboard and the front panel mounted function key panel and Graphics display. It serves as central location to tie the three connectors required for the function key panel, the graphics display control lines, and the graphics display backlight to a single ribbon cable extending back to the motherboard. This board also includes signal buffers for the graphics display control signals and a high voltage power supply for the graphics display backlight.

I/O Components

External I/O is driven from a generic bus that is capable of controlling the following devices:

- Analog output (voltage and current)
- Analog input (voltage)
- Digital output (TTL levels)
- Digital input (TTL levels)

Note The instrument has spare solenoid valve drivers and I/O support for future expansion. ▲

Analog Voltage Outputs

The instrument provides six analog voltage outputs. Each may be software configured for any one of the following ranges, while maintaining a minimum resolution of 12 bits:

- 0-100mV
- 0-1V
- 0-5V
- 0-10V

The user can calibrate each analog output zero and span point through firmware. At least 5% of full-scale over and under range are also supported.

The analog outputs may be assigned to any measurement or diagnostic channel with a user-defined range in the units of the selected parameter. The voltage outputs are independent of the current outputs.

Analog Current Outputs (Optional)

The optional I/O Expansion board includes six isolated current outputs. These are software configured for any one of the following ranges, while maintaining a minimum resolution of 11 bits:

- 0-20 mA
- 4-20 mA

The user can calibrate each analog output zero and span point through firmware. At least 5% of full-scale over and under range are also supported.

The analog outputs may be assigned to any measurement or diagnostic channel with a user-defined range in the units of the selected parameter. The current outputs are independent of the voltage outputs. The current

outputs are isolated from the instrument power and ground, but they share a common return line (Isolated GND).

Analog Voltage Inputs (Optional)

The optional I/O expansion board includes eight analog voltage inputs. These inputs are used to gather measurement data from third-party devices such as meteorological equipment. The user may assign a label, unit, and a voltage to user-defined unit conversion table (up to 16 points). All voltage inputs have a resolution of 12 bits over the range of 0 to 10 volts.

Digital Relay Outputs

The instrument includes one power fail relay on motherboard and ten digital output relays on the digital output board. These are reed relays rated for at least 500 mA @ 200VDC.

The power fail relay is Form C (both normally opened and normally closed contacts). All other relays are Form A (normally opened contacts) and are used to provide alarm status and mode information from the analyzer, as well as remote control to other devices, such as for controlling valves during calibration. The user may select what information is sent out each relay and whether the active state is opened or closed.

Digital Inputs

Sixteen digital inputs are available which may be programmed to signal instrument modes and special conditions including:

- NO Measure Mode
- NO_y Measure Mode
- PRE Measure Mode
- Zero Gas Mode
- Span Gas Mode
- Set Background
- Cal to Low Span
- Cal to High Span
- Analog Outputs to Full-Scale
- Analog Outputs to Zero

The actual use of these inputs will vary based on analyzer configuration.

The digital inputs are TTL level compatible and are pulled up within the analyzer. The active state can be user defined in firmware.

Serial Ports

Two serial ports allow daisy chaining so that multiple analyzers may be linked using one PC serial port.

The standard bi-directional serial interface can be configured for either RS-232 or RS-485. The serial baud rate is user selectable in firmware for standard speeds from 1200 to 115,200 baud. The following protocols are supported:

- C-Link
- Modbus Slave
- Geysitech (Bayern-Hessen)
- Streaming Data

The Streaming Data protocol transmits user-selected measurement data via the serial port in real-time for capture by a serial printer, datalogger, or PC.

RS-232 Connection

A null modem (crossed) cable is required when connecting the analyzer to an IBM Compatible PC. However, a straight cable (one to one) may be required when connecting the analyzer to other remote devices. As a general rule, when the connector of the host remote device is female, a straight cable is required and when the connector is male, a null modem cable is required.

Data Format:

1200, 2400, 4800, 9600, 19200, 38400, 57600, or 115200 BAUD

8 data bits

1 stop bit

no parity

All responses are terminated with a carriage return (hex 0D)

Refer to Table 8–1 for the DB9 connector pin configuration.

Table 8–1. RS-232 DB Connector Pin Configurations

DB9 Pin	Function
2	RX
3	TX
7	RTS
8	CTS
5	Ground

RS-485 Connection

The instrument uses a four wire RS-485 configuration with automatic flow control (SD). Refer to Table 8–2 for the DB9 connector pin configuration.

Table 8–2. RS-485 DB Connector Pin Configuration

DB9 Pin	Function
2	+ receive
8	- receive
7	+ transmit
3	- transmit
5	ground

Ethernet Connection

An RJ45 connector is used for the 10Mbs Ethernet connection supporting TCP/IP communications via standard IPV4 addressing. The IP address may be configured for static addressing or dynamic addressing (set using a DHCP server).

Any serial port protocols may be accessed over Ethernet in addition to the serial port.

External Accessory Connector

The external accessory connector is used in the Model 42*i* NO_y analyzer to communicate with the external converter assembly. RS-485 signals are used to communicate with the external converter interface board to monitor the converter temperature.

Chapter 9
Optional Equipment

The Model 42*i* NO_y is available with the following options:

- "Internal Zero/Span and Sample Valves" on page 9-1
- "Ozonator Permeation Dryer" on page 9-1
- "Ozone Particulate Filter" on page 9-1
- "I/O Expansion Board Assembly" on page 9-2
- "Terminal Block and Cable Kits" on page 9-2
- "Cables" on page 9-2
- "Mounting Options" on page 9-4

Internal Zero/Span and Sample Valves

With the zero/span assembly option, a source of span gas is connected to the SPAN port and a source of zero air is connected to the ZERO port. Zero and span gas should be supplied at atmospheric pressure. It may be necessary to use an atmospheric dump bypass plumbing arrangement to accomplish this.

For more information, refer to the "Installation" chapter and the "Operation" chapter.

Ozonator Permeation Dryer

The permeation dryer minimizes routing maintenance procedures by providing a continuous stream of dry air to the ozonator (using the selective water permeation characteristics of the dryer). With the permeation dryer option, it is not necessary to constantly replenish the ozonator air-drying column as in the standard instrument.

Refer to the "Operation" chapter for more information.

Ozone Particulate Filter

The ozone particulate filter minimizes the potential for contamination of the ozonator by trapping any particulate matter before passing through the ozonator.

I/O Expansion Board Assembly

The I/O expansion board provides six analog current output channels (0-20 mA or 4-20 mA) and eight analog voltage inputs (0-10V). The DB25 connector on the rear panel provides the interface for these inputs and outputs.

Terminal Block and Cable Kits

The optional terminal block and cable kits provide a convenient way to connect devices to the instrument. These kits break out the signals on the rear panel connector to individual numbered terminals.

Two types of terminal block and cable kits are available. One kit is for the DB37 connectors and can be used for either the analog output connector or the relay output connector. The other kit is for the DB25 connector and can be used for the optional I/O expansion board. For associated part numbers, refer to "External Device Connection Components" on page 7-7.

Each kit consists of:

- one six-foot cable
- one terminal block
- one snap track

Note Supporting all of the connections on units with the optional I/O expansion board requires:

- two DB37 kits
- one DB25 kit

Cables

Table 9–1 identifies the optional individual cables that are available for the instrument and Table 9–2 provides the cable color codes. For associated part numbers, refer to "External Device Connection Components" on page 7-7.

Note Table 9–2 provides the color coding for both 25-pin cables and 37-pin cables. Color codes for pins 1-25 are for 25-pin cables; color codes for pins 1-37 are for 37-pin cables. ▲

Table 9–1. Cable Options

Description	Cable Length
DB37M to open end	Six feet
DB37F to open end	Six feet
DB25M to open end	Six feet
RS-232	

Table 9–2. Color Codes for 25-Pin and 37-Pin Cables

Pin	Color	Pin	Color
1	BLACK	20	RED/BLACK
2	BROWN	21	ORANGE/BLACK
3	RED	22	YELLOW/BLACK
4	ORANGE	23	GREEN/BLACK
5	YELLOW	24	GRAY/BLACK
6	GREEN	25	PINK/BLACK
7	BLUE	End color codes for 25-pin cables continue for 37-pin cables.	
8	VIOLET	26	PINK/GREEN
9	GRAY	27	PIND/RED
19	WHITE	28	PINK/VIOLET
11	PINK	29	LIGHT BLUE
12	LIGHT GREEN	30	LIGHT BLUE/BROWN
13	BLACK/WHITE	31	LIGHT BLUE/RED
14	BROWN/WHITE	32	LIGHT BLUE/VIOLET
15	RED/WHITE	33	LIGHT BLUE/BLACK
16	ORANGE/WHITE	34	GRAY/GREEN
17	GREEN/WHITE	35	GRAY/RED
18	BLUE/WHITE	36	GRAY/VIOLET
19	VIOLET/WHITE	37	LIGHT GREEN/BLACK

Mounting Options

The analyzer can be installed in the configuration described in Table 9–3 and shown in Figure 9–1 through Figure 9–4.

Table 9–3. Mounting Options

Mounting Type	Description
Bench	Positioned on bench, includes mounting feet, and front panel side-trim handles.
EIA rack	Mounted in an EIA-style rack, includes mounting slides, and front panel EIA-rack mounting handles.
Retrofit rack	Mounted in a Thermo non-EIA rack, includes mounting slides, and retrofit front panel rack-mounting handles.

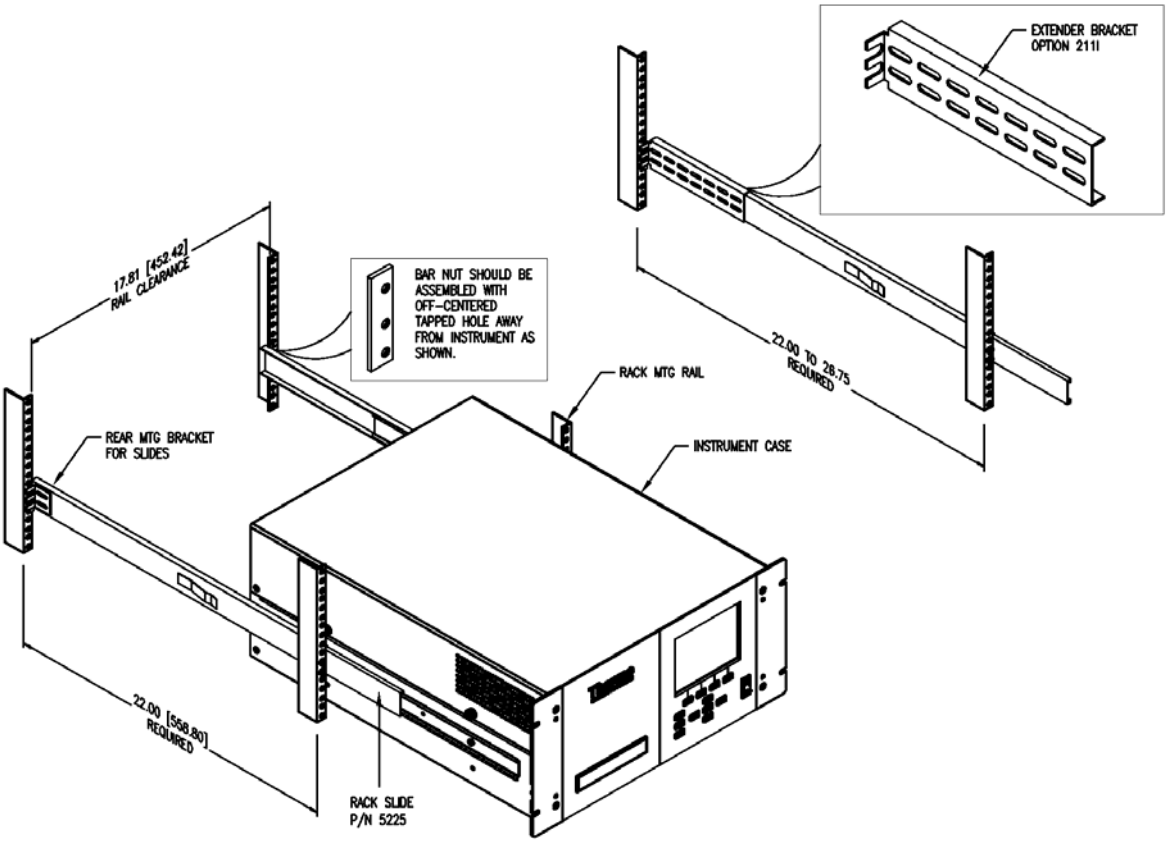

Figure 9–1. Rack Mount Option Assembly

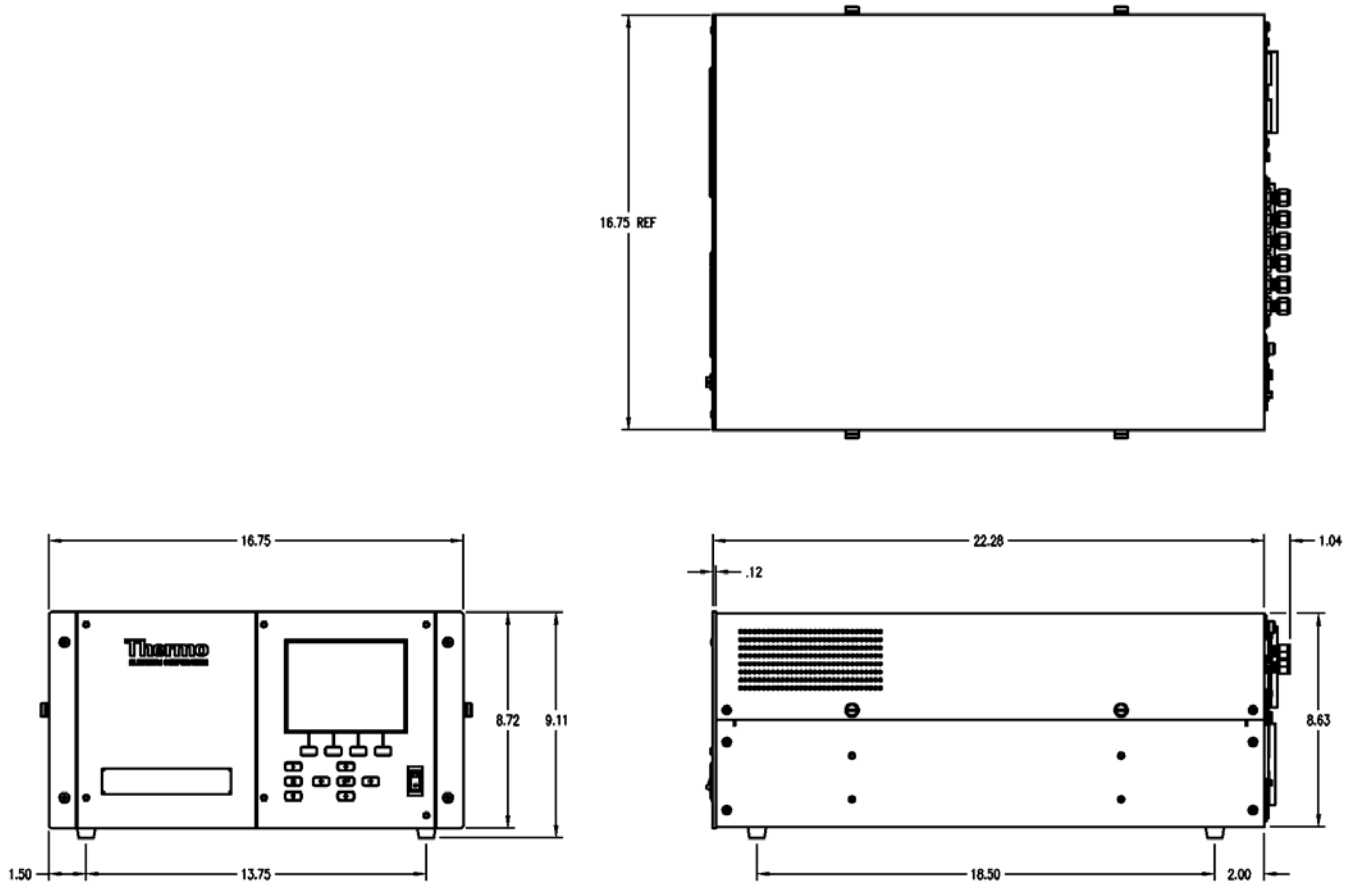

Figure 9–2. Bench Mounting

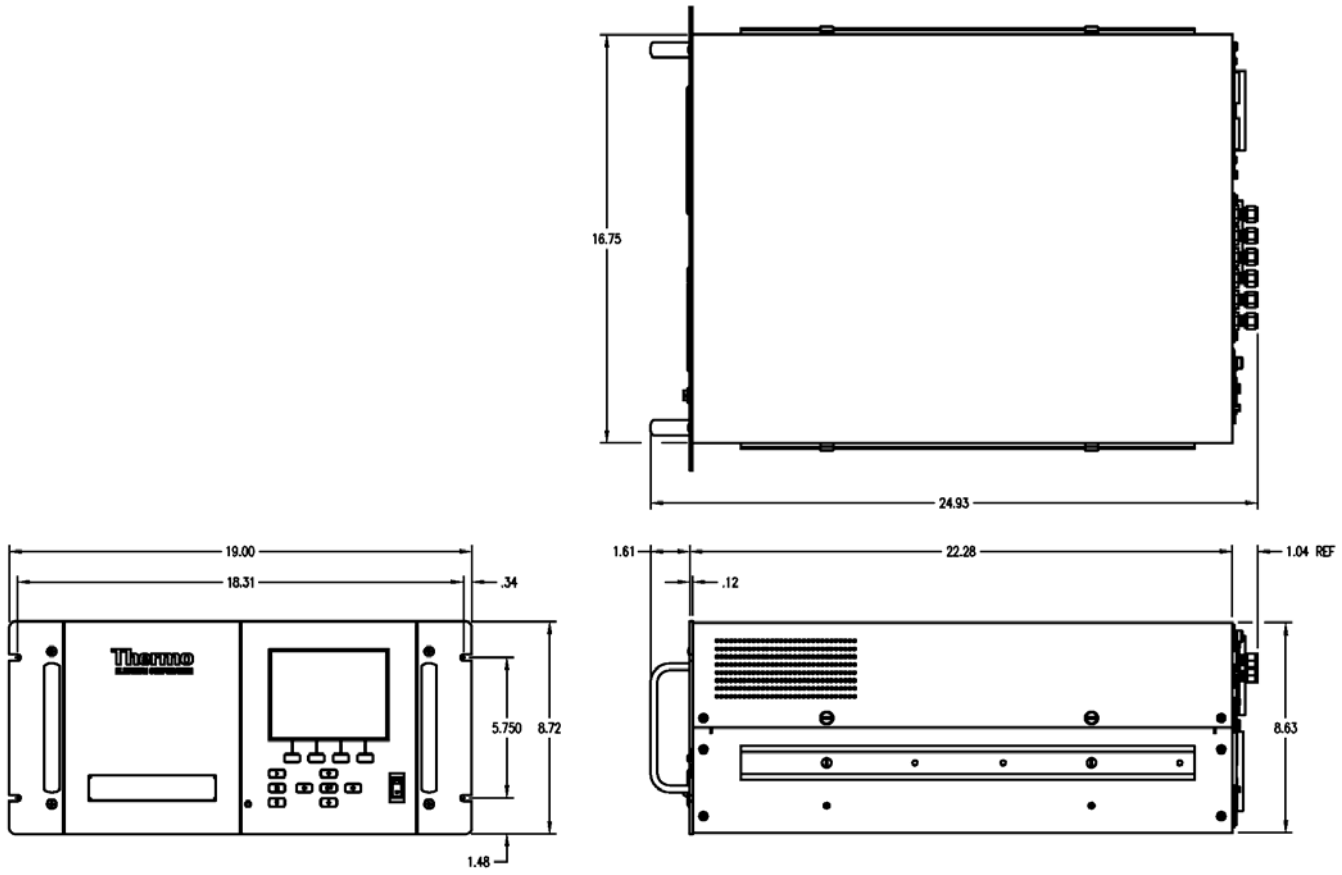

Figure 9–3. EIA Rack Mounting

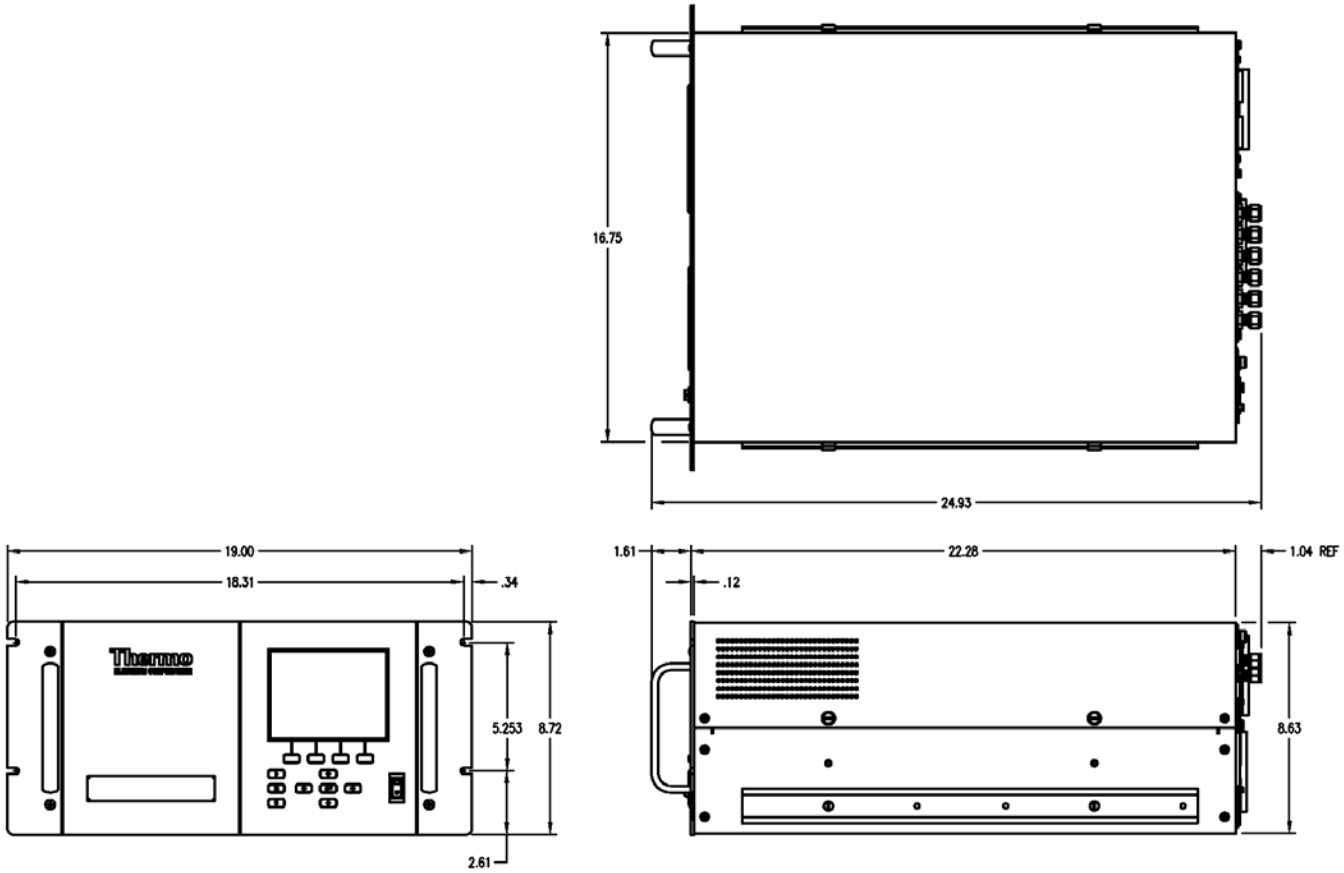

Figure 9–4. Retrofit Rack Mounting

Appendix A
Warranty

Seller warrants that the Products will operate or perform substantially in conformance with Seller's published specifications and be free from defects in material and workmanship, when subjected to normal, proper and intended usage by properly trained personnel, for the period of time set forth in the product documentation, published specifications or package inserts. If a period of time is not specified in Seller's product documentation, published specifications or package inserts, the warranty period shall be one (1) year from the date of shipment to Buyer for equipment and ninety (90) days for all other products (the "Warranty Period"). Seller agrees during the Warranty Period, to repair or replace, at Seller's option, defective Products so as to cause the same to operate in substantial conformance with said published specifications; provided that (a) Buyer shall promptly notify Seller in writing upon the discovery of any defect, which notice shall include the product model and serial number (if applicable) and details of the warranty claim; (b) after Seller's review, Seller will provide Buyer with service data and/or a Return Material Authorization ("RMA"), which may include biohazard decontamination procedures and other product-specific handling instructions; and (c) then, if applicable, Buyer may return the defective Products to Seller with all costs prepaid by Buyer. Replacement parts may be new or refurbished, at the election of Seller. All replaced parts shall become the property of Seller. Shipment to Buyer of repaired or replacement Products shall be made in accordance with the Delivery provisions of the Seller's Terms and Conditions of Sale. Consumables, including but not limited to lamps, fuses, batteries, bulbs and other such expendable items, are expressly excluded from the warranty under this warranty.

Notwithstanding the foregoing, Products supplied by Seller that are obtained by Seller from an original manufacturer or third party supplier are not warranted by Seller, but Seller agrees to assign to Buyer any warranty rights in such Product that Seller may have from the original manufacturer or third party supplier, to the extent such assignment is allowed by such original manufacturer or third party supplier.

In no event shall Seller have any obligation to make repairs, replacements or corrections required, in whole or in part, as the result of (i) normal wear and tear, (ii) accident, disaster or event of force majeure, (iii) misuse, fault or negligence of or by Buyer, (iv) use of the Products in a manner for which

they were not designed, (v) causes external to the Products such as, but not limited to, power failure or electrical power surges, (vi) improper storage and handling of the Products or (vii) use of the Products in combination with equipment or software not supplied by Seller. If Seller determines that Products for which Buyer has requested warranty services are not covered by the warranty hereunder, Buyer shall pay or reimburse Seller for all costs of investigating and responding to such request at Seller's then prevailing time and materials rates. If Seller provides repair services or replacement parts that are not covered by the warranty provided in this warranty, Buyer shall pay Seller therefor at Seller's then prevailing time and materials rates. ANY INSTALLATION, MAINTENANCE, REPAIR, SERVICE, RELOCATION OR ALTERATION TO OR OF, OR OTHER TAMPERING WITH, THE PRODUCTS PERFORMED BY ANY PERSON OR ENTITY OTHER THAN SELLER WITHOUT SELLER'S PRIOR WRITTEN APPROVAL, OR ANY USE OF REPLACEMENT PARTS NOT SUPPLIED BY SELLER, SHALL IMMEDIATELY VOID AND CANCEL ALL WARRANTIES WITH RESPECT TO THE AFFECTED PRODUCTS.

THE OBLIGATIONS CREATED BY THIS WARRANTY STATEMENT TO REPAIR OR REPLACE A DEFECTIVE PRODUCT SHALL BE THE SOLE REMEDY OF BUYER IN THE EVENT OF A DEFECTIVE PRODUCT. EXCEPT AS EXPRESSLY PROVIDED IN THIS WARRANTY STATEMENT, SELLER DISCLAIMS ALL OTHER WARRANTIES, WHETHER EXPRESS OR IMPLIED, ORAL OR WRITTEN, WITH RESPECT TO THE PRODUCTS, INCLUDING WITHOUT LIMITATION ALL IMPLIED WARRANTIES OF MERCHANTABILITY OR FITNESS FOR ANY PARTICULAR PURPOSE. SELLER DOES NOT WARRANT THAT THE PRODUCTS ARE ERROR-FREE OR WILL ACCOMPLISH ANY PARTICULAR RESULT.

Appendix B
C-Link Protocol Commands

This appendix provides a description of the C-Link protocol commands that can be used to remotely control a Model 42*i* NO_y analyzer using a host device such as a PC or a datalogger. C-Link protocol may be used over RS-232, RS-485, or Ethernet. C-Link functions can be accessed over Ethernet using TCP/IP port 9880.

Streaming data is sent out the serial port or the Ethernet port on a user-defined periodic basis. Streaming data over Ethernet is only generated when a connection is made on TCP port 9881.

For details, see the following topics:

- "Instrument Identification Number" on page B-1
- "Commands" on page B-2
- "Measurements" on page B-9
- "Alarms" on page B-13
- "Diagnostics" on page B-17
- "Datalogging" on page B-17
- "Calibration" on page B-26
- "Keys/Display" on page B-29
- "Measurement Configuration" on page B-31
- "Hardware Configuration" on page B-34
- "Communications Configuration" on page B-38
- "I/O Configuration" on page B-42
- "Record Layout Definition" on page B-46

Instrument Identification Number

Each command sent to the analyzer over the serial port must begin with the American Standard Code for Information Interchange (ASCII) symbol or byte value equivalent of the instrument's identification number plus 128. For example, if the instrument ID is set to 25, then each command must begin with the ACSII character code 153 decimal. The analyzer ignores any command that does not begin with its instrument identification number. If

the instrument ID is set to 0, then this byte is not required. For more information on changing Instrument ID, see Chapter 3, "Operation".

Commands

The analyzer must be in the remote mode in order to change instrument parameters via remote. However, the command "set mode remote" can be sent to the analyzer to put it in the remote mode. Report commands (commands that don't begin with "set") can be issued either in the remote or local mode. For information on changing modes, see Chapter 3, "Operation".

The commands can be sent in either uppercase or lowercase characters. Each command must begin with the proper instrument identification number (ASCII) character. The command in the example below begins with the ASCII character code 170 decimal, which directs the command to the Model 42*i* NO_y, and is terminated by a carriage return "CR" (ASCII character code 13 decimal).

<ASCII 170>	T	I	M	E	<CR>

If an incorrect command is sent, a "bad command" message will be received. The example below sends the incorrect command "set unit ppb" instead of the correct command "set gas unit ppb."

```
Send:        set unit ppb
Receive:     set unit ppb bad cmd
```

The "save" and "set save params" commands stores parameters in FLASH. It is important that each time instrument parameters are changed, that this command be sent. If changes are not saved, they will be lost in the event of a power failure.

Commands List

Table B–1 lists the 42*i* NO_y C-Link protocol commands. The interface will respond to the command strings outlined below.

Table B–1. C-Link Protocol Commands

Command	Description	Page
addr dns	Reports/sets domain name server address for Ethernet port	B-38
addr gw	Reports/sets default gateway address for Ethernet port	B-38
addr ip	Reports/sets IP address for Ethernet port	B-38
addr nm	Reports/sets netmask address for Ethernet port	B-39

Command	Description	Page
alarm chamber temp max	Reports/sets chamber temperature alarm maximum value	B-13
alarm chamber temp min	Reports/sets chamber temperature alarm minimum value	B-13
alarm conc dif max	Reports/sets current DIF concentration alarm maximum value	B-14
alarm conc dif min	Reports/sets current DIF concentration alarm minimum value	B-14
alarm conc no max	Reports/sets current NO concentration alarm maximum value	B-14
alarm conc no min	Reports/sets current NO concentration alarm minimum value	B-14
alarm conc noy max	Reports/sets current NO_y concentration alarm maximum value	B-14
alarm conc noy min	Reports/sets current NO_y concentration alarm minimum value	B-14
alarm conc pre max	Reports/sets current prereactor concentration alarm maximum value	B-14
alarm conc pre min	Reports/sets current prereactor concentration alarm minimum value	B-14
alarm cooler temp max	Reports/sets PMT cooler temperature alarm maximum value	B-14
alarm cooler temp min	Reports/sets PMT cooler temperature alarm minimum value	B-14
alarm ext converter temp max	Reports/sets external converter temperature alarm maximum value	B-15
alarm ext converter temp min	Reports/sets external converter temperature alarm minimum value	B-15
alarm internal temp max	Reports/sets internal temperature alarm maximum value	B-15
alarm internal temp min	Reports/sets internal temperature alarm minimum value	B-15
alarm pressure max	Reports/sets pressure alarm maximum value	B-15
alarm pressure min	Reports/sets pressure alarm minimum value	B-15
alarm sample flow max	Reports/sets sample flow alarm maximum value	B-16
alarm sample flow min	Reports/sets sample flow alarm minimum value	B-16
alarm trig conc dif	Reports/sets current DIF concentration alarm warning value	B-16
alarm trig conc no	Reports/sets current NO concentration alarm warning value	B-16
alarm trig conc noy	Reports/sets current NO_y concentration alarm warning value	B-16
alarm trig conc pre	Reports/sets current prereactor concentration alarm warning value	B-16

Command	Description	Page
analog iout range	Reports analog current output range per channel	B-42
analog vin	Retrieves analog voltage input data per channel	B-42
analog vout range	Reports analog voltage output range per channel	B-42
avg time	Reports/sets averaging time	B-9
baud	Reports/sets current baud rate	B-39
bkg no	Reports/sets current NO background	B-28
bkg pre	Reports/sets current prereactor background	B-28
cal dif coef	Sets/auto-calibrates DIF coefficient	B-26
cal high dif coef	Sets/auto-calibrates high range DIF coefficient	B-26
cal high no coef	Sets/auto-calibrates high range NO coefficient	B-26
cal high noy coef	Sets/auto-calibrates high range NO_y coefficient	B-26
cal low dif coef	Sets/auto-calibrates low range DIF coefficient	B-26
cal low no coef	Sets/auto-calibrates low range NO coefficient	B-26
cal low noy coef	Sets/auto-calibrates low range NO_y coefficient	B-26
cal no bkg	Sets/auto-calibrates NO background	B-26
cal no coef	Sets/auto-calibrates NO coefficient	B-26
cal noy bkg	Sets/auto-calibrates NO_y background	B-26
cal noy coef	Sets/auto-calibrates NO_y coefficient	B-26
cal pre bkg	Sets/auto-calibrates prereactor background	B-26
clr lrecs	Clears away only long records that have been saved	B-18
clr records	Clears away all logging records that have been saved	B-17
clr srecs	Clears away only short records that have been saved	B-18
contrast	Reports/sets current screen contrast	B-34
conv set temp	Reports/sets temperature setpoint for DIF converter	B-35
conv temp	Reports current DIF converter temperature	B-11
cooler temp	Reports temperature of PMT cooler (same as PMT temperature)	B-11
copy lrec to sp	Sets/copies current lrec selection into the scratch pad	B-24
copy sp to lrec	Sets/copies current selections in scratch pad into lrec list	B-24
copy sp to srec	Sets/copies current selections in scratch pad into srec list	B-24
copy sp to stream	Sets/copies current selections in scratch pad into stream list	B-24
copy srec to sp	Sets/copies current srec selection into the scratch pad	B-24
copy stream to sp	Sets/copies current streaming data selection into the scratch pad	B-24

Command	Description	Page
custom	Reports/sets defined custom range concentration	B-32
data treatment lrec	Reports/sets data treatment for concentration values in long records	B-18
data treatment srec	Reports/sets data treatment for concentration values in short records	B-18
date	Reports/sets current date	B-35
default params	Sets parameters to default values	B-36
dhcp	Reports/sets state of use of DHCP	B-39
diag volt iob	Reports diagnostic voltage level for I/O expansion board	B-17
diag volt mb	Reports diagnostic voltage level for motherboard	B-17
diag volt mib	Reports diagnostic voltage level for measurement interface board	B-17
dif	Reports current DIF concentration	B-10
dif coef	Reports/sets current DIF coefficient	B-27
dif gas	Reports/sets DIF span gas concentration	B-27
dig in	Reports status of the digital inputs	B-43
din	Reports/sets digital input channel and active state	B-43
do (down)	Simulates pressing down pushbutton	B-29
dout	Reports/sets digital output channel and active state	B-44
dtoa	Reports outputs of the digital to analog converters per channel	B-44
en (enter)	Simulates pressing enter pushbutton	B-29
er	Returns a brief description of the main operating conditions in the format specified in the commands	B-20
erec	Returns a brief description of the main operating conditions in the format specified in the command	B-20
erec format	Reports/sets erec format (ASCII or binary)	B-22
erec layout	Reports current layout of erec data	B-23
flags	Reports 8 hexadecimal digits (or flags) that represent the status of the ozonator, PMT, gas mode, and alarms	B-12
flow	Reports current measured sample flow in LPM	B-11
format	Reports/sets current reply termination format	B-40
gas mode	Reports current mode of sample, zero, or span	B-32
gas unit	Reports/sets current gas units	B-33
he (help)	Simulates pressing help pushbutton	B-29
high avg time	Reports/sets high range averaging time	B-9

Command	Description	Page
high dif	Reports DIF concentration calculated with high range coefficients	B-10
high dif coef	Reports/sets high range DIF coefficients	B-27
high dif gas	Reports/sets high range DIF span gas concentration	B-27
high no	Reports NO concentration calculated with high range coefficients	B-10
high no coef	Reports/sets high range NO coefficients	B-27
high no gas	Reports/sets high range NO span gas concentration	B-27
high noy	Reports NO_y concentration calculated with high range coefficients	B-10
high noy coef	Reports/sets high range NO_y coefficients	B-27
high noy gas	Reports/sets high range NO_y span gas concentration	B-27
high pre	Reports prereactor concentration calculated with high range coefficients	B-10
high range dif	Reports/selects current DIF high range	B-31
high range no	Reports/selects current NO high range	B-31
high range noy	Reports/selects current NO_y high range	B-31
host name	Reports/sets host name string	B-40
instr name	Reports instrument name	B-40
instrument id	Reports/sets instrument id	B-41
internal temp	Reports current internal instrument temperature	B-11
isc (iscreen)	Retrieves framebuffer data used for the display	B-29
layout ack	Disables stale layout/layout changed indicator ('*')	B-41
le (left)	Simulates pressing left pushbutton	B-29
list din	Lists current selection for digital input	B-18
list dout	Lists current selection for digital output	B-18
list lrec	Lists current selection lrec logging data	B-19
list sp	Lists current selection in the scratchpad list	B-19
list srec	Lists current selection srec logging data	B-19
list stream	Lists current selection streaming data output	B-19
list var aout	Reports list of analog output, index numbers, and variables	B-45
list var din	Reports list of digital input, index numbers, and variables	B-45
list var dout	Reports list of digital output, index numbers, and variables	B-45
list var log	Reports the allowable variable to be set for logging data	B-19
low avg time	Reports/sets low averaging time	B-9

Command	Description	Page
low dif	Reports DIF concentration calculated with low range coefficients	B-10
low dif coef	Reports/sets low range DIF coefficient	B-27
low dif gas	Reports/sets low range DIF span gas concentration	B-27
low no	Reports NO concentration calculated with low range coefficients	B-10
low no coef	Reports/sets low range NO coefficient	B-27
low no gas	Reports/sets low range NO span gas concentration	B-27
low noy	Reports NO_y concentration calculated with low range coefficients	B-10
low noy coef	Reports/sets low range NO_y coefficient	B-27
low noy gas	Reports/sets low range NO_y span gas concentration	B-28
low pre	Reports prereactor concentration calculated with low range coefficients	B-10
low range dif	Reports/sets current DIF low range	B-31
low range no	Reports/sets current NO low range	B-31
low range noy	Reports/sets current NO_y low range	B-31
lr	Outputs long records in the format specified in the command	B-20
lrec	Outputs long records	B-21
lrec format	Reports/sets output format for long records (ASCII or binary)	B-22
lrec layout	Reports current layout of lrec data	B-23
lrec mem size	Reports maximum number of long records that can be stored	B-23
lrec per	Reports/sets long record logging period	B-23
malloc lrec	Reports/sets memory allocation for long records	B-24
malloc srec	Reports/sets memory allocation for short records	B-24
me (menu)	Simulates pressing menu pushbutton	B-29
meas mode	Reports/sets which measurement mode is active	B-34
mode	Reports operating mode in local, service, or remote	B-41
no	Reports current NO concentration	B-10
no bkg	Reports/sets current NO background	B-28
no coef	Reports/sets current NO coefficient	B-27
no gas	Reports/sets NO span gas concentration	B-27
no of lrec	Reports/sets number of long records stored in memory	B-23
no of srec	Reports/sets number of short records stored in memory	B-23
noy	Reports current NO_y concentration	B-10

Command	Description	Page
noy bkg	Reports/sets current NO_y background	B-28
noy coef	Reports/sets current NO_y coefficient	B-27
noy gas	Reports/sets NO_y span gas concentration	B-27
ozonator	Reports/sets ozonator on or off	B-36
ozonator flow	Reports current ozonator flow	B-36
ozonator safety	Reports/sets ozonator safety on or off	B-36
ozonator status	Reports status of ozonator and safety	B-37
pmt status	Reports/sets PMT status on or off	B-37
pmt temp	Reports temperature of the PMT cooler (same as cooler temperature)	B-11
pmt voltage	Reports current PMT voltage	B-11
pre	Reports current prereactor concentration	B-10
pres	Reports current reaction chamber pressure	B-12
pres comp	Reports/sets pressure compensation on or off	B-34
program no	Reports analyzer program number	B-41
push	Simulates pressing a key on the front panel	B-29
range dif	Reports/sets current DIF range	B-31
range mode	Reports/sets current range mode	B-32
range no	Reports/sets current NO range	B-31
range noy	Reports/sets current NO_y range	B-31
react temp	Reports current reaction chamber temperature	B-12
relay stat	Reports/sets relay logic status to for the designated relay(s)	B-45
ri (right)	Simulates pressing right pushbutton	B-29
ru (run)	Simulates pressing run pushbutton	B-29
sample	Sets zero/span valves to sample mode	B-33
sample flow	Reports current measured sample flow in LPM	B-11
sample gas	Sets zero/span valves to sample gas mode	B-33
save	Stores parameters in FLASH	B-37
save params	Stores parameters in FLASH	B-37
sc (screen)	C-series legacy command that reports a generic response (Use iscreen instead)	B-30
sp field	Reports/sets item number and name in scratch pad list	B-25
span	Sets zero/span valves to span mode	B-33
span gas	Sets zero/span valves to span gas mode	B-33

Command	Description	Page
sr	Reports last short record stored	B-20
srec	Reports maximum number of short records	B-21
srec format	Reports/sets output format for short records (ASCII or binary)	B-22
srec layout	Reports current layout of short record data	B-23
srec mem size	Reports maximum number of short records	B-23
srec per	Reports/sets short record logging period	B-23
stream per	Reports/sets current set time interval for streaming data	B-25
stream time	Reports/sets a time stamp to streaming data or not	B-26
temp comp	Reports/sets temperature compensation on or off	B-34
time	Reports/sets current time (24-hour time)	B-37
up	Simulates pressing up pushbutton	B-29
zero	Sets zero/span valves to zero mode	B-33
zero gas	Sets zero/span valves to zero gas mode	B-33

Measurements

avg time
high avg time
low avg time
These commands report the averaging time in seconds when operating in single range, or averaging time used with the high and low ranges when operating in dual or auto range mode. The example below shows that the averaging time is 300 seconds, according to Table B–2.

```
Send:         avg time
Receive:      avg time 12:300 sec
```

set avg time *selection*
set high avg time *selection*
set low avg time *selection*
These commands set the averaging time, high and low averaging times, according to Table B–2. The example below sets the low range averaging time to 120 seconds.

```
Send:         set low avg time 9
Receive:      set low avg time 9 ok
```

Table B–2. Averaging Times

Selection	Time, NO Measure Mode, NO_y Measure Mode	Time, NO/NO_y Measure Mode
0	1* seconds	
1	1*	
2	2*	
3	5*	
4	10	10 seconds
5	20	20
6	30	30
7	60	60
8	90	90
9	120	120
10	180	180
11	240	240
12	300	300

*Manual mode only

no
dif
noy
pre
high no
high dif
high noy
high pre
low no
low dif
low noy
low pre

These commands report the measured NO, DIF, NO_y and prereactor concentrations when operating in single range, or high and low NO, DIF, NO_y, and prereactor when operating in dual or auto range mode. The example below shows that the NO concentration is 67.2 ppb.

```
Send:        no
Receive:     no 6720E-2 ppb
```

conv temp
This command reports the current DIF converter temperature. The example below reports that the current converter temperature is 320.7 °C.

```
Send:         conv temp
Receive:      conv temp 320.7 deg C
```

cooler temp
This command reports the current PMT cooler temperature. The example below reports that the current PMT cooler temperature is -2.8 °C.

```
Send:         pmt temp
Receive:      pmt temp -2.8 deg C
```

flow
sample flow
These commands report the current measured flow. The example below reports that the flow measurement is 0.700 liters/minute.

```
Send:         flow
Receive:      flow 0.7 1/m
```

internal temp
This command reports the current internal instrument temperature. The first reading is the temperature being used in instrument calculations. The second temperature is the actual temperature being measured. If temperature compensation is on, then both temperature readings are the same. If temperature compensation is off, a temperature of 30 °C is used as the default temperature even though the actual internal temperature is 27.2 °C. The example below shows that temperature compensation is on and that the internal temperature is 27.2 °C.

```
Send:         internal temp
Receive:      internal temp 027.2 deg C, actual 027.2
```

pmt temp
This command reports the PMT cooler temperature. The example below reports that the PMT cooler temperature is -2.8 °C.

```
Send:         pmt temp
Receive:      pmt temp -2.8 deg C
```

pmt voltage
This command reports the PMT voltage. The example below reports that the current PMT voltage is -750 volts.

```
Send:         pmt voltage
Receive:      pmt voltage -750
```

pres

This command reports the current reaction chamber pressure. The first pressure reading is the pressure reading being used in instrument calculations. The second pressure is the actual pressure reading being measured. If pressure compensation is on, then both pressure readings are the same. If pressure compensation is off, a pressure of 300 mmHg is used as default pressure even though the actual pressure is 306.3 mmHg. The example below shows that the actual reaction chamber pressure is 306.3 mmHg.

```
Send:         pres
Receive:      pres 300.0 mm Hg, actual 306.6
```

react temp

This command reports the current reaction chamber temperature. The example below reports that the current reaction temperature is 49.0 °C.

```
Send:         react temp
Receive:      react temp 49.0 deg C
```

flags

This reports 8 hexadecimal digits (or flags) that represent the status of the ozonator, PMT, pressure and temperature compensation status, gas units, gas mode, and alarms. To decode the flags, each hexadecimal digit is converted to binary as shown in the Figure B–1. It is the binary digits that define the status of each parameter. In the example below, the instrument is reporting that the ozonator and PMT are both on, and that the instrument is in the span gas mode.

```
Send:         flags
Receive:      flags 80028000
```

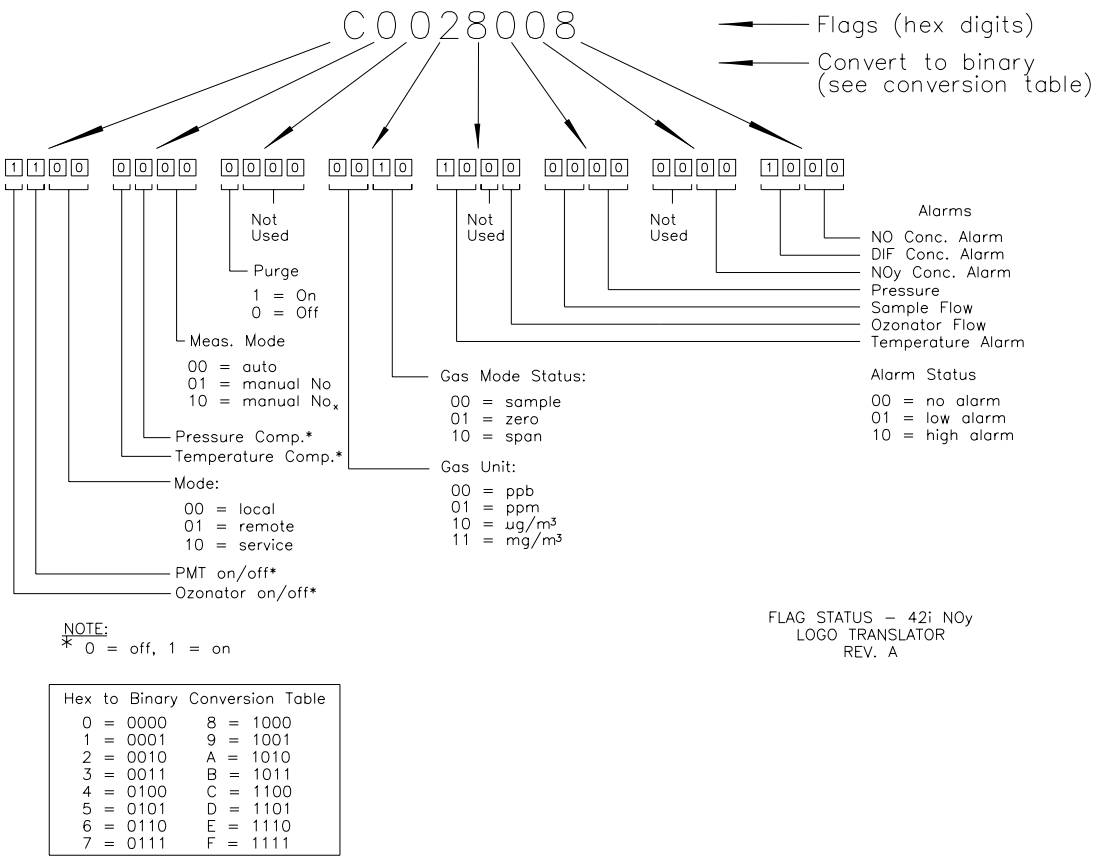

Figure B–1. Flags

Alarms

alarm chamber temp min
alarm chamber temp max
These commands report the chamber temperature alarm minimum and maximum value current settings. The example below reports that the chamber temperature alarm minimum value is 47.0 °C.

```
Send:        alarm chamber temp min
Receive:     alarm chamber temp min 47.0 deg C
```

set alarm chamber temp min *value*
set alarm chamber temp max *value*
These commands set the chamber temperature alarm minimum and maximum values to *value*, where *value* is a floating-point number representing chamber temperature alarm limits in degrees C. The example below sets the chamber temperature alarm maximum value to 50.0 °C.

```
Send:        set alarm chamber temp max 50.0
Receive:     set alarm chamber temp max 50.0 ok
```

alarm conc no min
alarm conc dif min
alarm conc noy min
alarm conc pre min
alarm conc no max
alarm conc dif max
alarm conc noy max
alarm conc pre max

These commands report the NO, DIF, NO_y, and prereactor concentration alarm minimum and maximum values current setting. The example below reports that the NO concentration minimum is 62.7 ppb.

```
Send:         alarm conc no min
Receive:      alarm conc no min 62.7 ppb
```

set alarm conc no min *value*
set alarm conc dif min *value*
set alarm conc noy min *value*
set alarm conc pre min *value*
set alarm conc no max *value*
set alarm conc dif max *value*
set alarm conc noy max *value*
set alarm conc pre max *value*

These commands set the NO, DIF, NO_y, and prereactor concentration alarm minimum and maximum values to *value*, where *value* is a floating-point representation of the concentration alarm limits. Values must be in the units that are currently set for use. The example below sets the NO concentration alarm maximum value to 115.

```
Send:         set alarm conc no max 115
Receive:      set alarm conc no max 115 ok
```

alarm cooler temp min
alarm cooler temp max

These commands report the cooler temperature alarm minimum and maximum value current settings. The example below reports that the cooler temperature alarm minimum value is -10.0 °C.

```
Send:         alarm cooler temp min
Receive:      alarm cooler temp min -10.0 deg C
```

set alarm cooler temp min *value*
set alarm cooler temp max *value*

These commands set the cooler temperature alarm minimum and maximum values to *value*, where *value* is a floating-point number representing cooler temperature alarm limits in degrees C. The example below sets the cooler temperature alarm maximum value to -2.0 °C.

```
Send:         set alarm cooler temp max -2.0
Receive:      set alarm cooler temp max -2.0 ok
```

---

alarm ext converter temp min
alarm ext converter temp max
These commands report the external converter temperature alarm minimum and maximum value current settings. The example below reports that the external converter temperature alarm minimum value is 300.0 °C.

```
Send:         alarm ext converter temp min
Receive:      alarm ext converter temp min 300.0 deg C
```

set alarm ext converter temp min *value*
set alarm ext converter temp max *value*
These commands set the external converter temperature alarm minimum and maximum values to *value*, where *value* is a floating-point number representing the external converter temperature alarm limits in degrees C. The example below sets the external converter temperature alarm maximum value to 340.0 °C.

```
Send:         set alarm ext converter temp max 340
Receive:      set alarm ext converter temp max 340 ok
```

---

alarm internal temp min
alarm internal temp max
These commands report the internal temperature alarm minimum and maximum value current settings. The example below reports that the internal temperature alarm minimum value is 15.0 °C.

```
Send:         alarm internal temp min
Receive:      alarm internal temp min 15.0 deg C
```

set alarm internal temp min *value*
set alarm internal temp max *value*
These commands set the internal temperature alarm minimum and maximum values to *value*, where *value* is a floating-point number representing internal temperature alarm limits in degrees C. The example below sets the internal temperature alarm maximum value to 45.0 °C.

```
Send:         set alarm internal temp max 45
Receive:      set alarm internal temp max 45 ok
```

---

alarm pressure min
alarm pressure max
These commands report the pressure alarm minimum and maximum value current settings. The example below reports that the pressure alarm minimum value is 205 mmHg.

```
Send:         alarm pressure min
Receive:      alarm pressure min 205 mmHg
```

set alarm pressure min *value*
set alarm pressure max *value*
These commands set the pressure alarm minimum and maximum values to *value*, where *value* is a floating-point number representing pressure alarm limits in millimeters of mercury. The example below sets the pressure alarm maximum value to 215 mmHg.

```
Send:         set alarm pressure max 215
Receive:      set alarm pressure max 215 ok
```

---

alarm sample flow min
alarm sample flow max
These commands report the sample flow alarm minimum and maximum value current settings. The example below reports that the sample flow alarm minimum value is 0.300 LPM.

```
Send:         alarm sample flow min
Receive:      alarm sample flow min 0.3 l/min
```

set alarm sample flow min *value*
set alarm sample flow max *value*
These commands set the sample flow alarm minimum and maximum values to *value*, where *value* is a floating-point number representing sample flow alarm limits in liters per minute. The example below sets the sample flow alarm maximum value to 2 LPM.

```
Send:         set alarm sample flow max 2
Receive:      set alarm sample flow max 2 ok
```

---

alarm trig conc no
alarm trig conc dif
alarm trig conc noy
alarm trig conc pre
This command reports the NO, DIF, NO_y, and prereactor concentration alarm trigger action for minimum alarm, current setting, to either floor or ceiling. The example below shows the NO concentration minimum alarm trigger to ceiling, according to Table B–3.

```
Send:         alarm trig conc no
Receive:      alarm trig conc no 1
```

set alarm trig conc no *value*
set alarm trig conc dif *value*
set alarm trig conc noy *value*
set alarm trig conc pre *value*

These commands set the NO, DIF, NO_y, and prereactor concentration alarm minimum *value*, where *value* is set to either floor or ceiling, according to Table B–3. The example below sets the NO concentration minimum alarm trigger to ceiling.

```
Send:         set alarm trig conc no 1
Receive:      set alarm trig conc no 1 ok
```

Table B–3. Alarm Trigger Values

Value	Alarm Trigger
00	Floor
01	Ceiling

Diagnostics

diag volt mb

This command reports the diagnostic voltage measurements on the motherboard. The sequence of voltages is: Positive 24, positive 15, positive 5, positive 3.3, and negative 3.3. Each voltage value is separated by a space.

```
Send:         diag volt mb
Receive:      diag volt mb 24.1 14.9 4.9 3.2 -3.2
```

diag volt mib

This command reports the diagnostic voltage measurements on the measurement interface board. The sequence of voltages is: Positive 24, positive 15, negative 15, positive 5, positive 3.3, and positive 15. Each voltage value is separated by a space.

```
Send:         diag volt mib
Receive:      diag volt mib 24.1 14.9 -14.9 4.9 3.2 14.9
```

diag volt iob

This command reports the diagnostic voltage measurements on the I/O expansion board. The sequence of voltages is: Positive 24, positive 5, positive 3.3, and negative 3.3. Each voltage value is separated by a space.

```
Send:         diag volt iob
Receive:      diag volt iob 24.1 4.9 3.2 -3.2
```

Datalogging

clr records

This command will clear all long and short records that have been saved.

```
Send:         clear records
Receive:      clear records ok
```

set clr lrecs
set clr srecs
These commands will clear only the long records or only the short records that have been saved. The example below clears short records.

```
Send:         set clr srecs
Receive:      set clr srecs ok
```

---

data treatment lrec
data treatment srec
These commands report the current selection of data treatment for concentrations in the long records (lrecs) or short records (srecs). The example below reports the data treatment for concentrations in lrec is minimum.

```
Send:         data treatment lrec
Receive:      data treatment lrec min
```

set data treatment lrec *string*
set data treatment srec *string*
string = | cur | avg | min | max |

These commands set the data treatment to current, average, minimum, or maximum for the concentration values recorded in the long records (lrecs) or short records (srecs). The example below sets the data treatment for concentrations in lrec to minimum.

```
Send:         set data treatment lrec min
Receive:      set data treatment lrec min ok
```

---

list din
list dout
These commands report the current selection for the digital outputs in the format. Output no Index number variable name active state. The active state for digital outputs is open or closed. The active state for digital inputs is high or low.

```
Send:         list dout
Receive:      list dout
              output index variable state
              1 35 CONC ALARM open
              3 4 UNITS open
              4 11 GEN ALARM closed
              7 7 NO MODE open
              8 8 NOy MODE open
```

list lrec
list srec
list stream
list sp

These commands report the list of current selections for long record logging data, short record logging data, streaming data output, or the scratch pad (sp) list. The example below shows the list for streaming data output.

```
Send:         list stream
Receive:      list stream
              field index variable
              x x time
              1 1 no
              2 2 dif
              3 3 noy
              4 18 intt
              5 25 pres
              6 26 smplf
```

list var log

This command reports the allowable variable to be set for logging data.

```
Send:         list var log
Receive:      list var log
              index variable
              0 none
              1 no
              2 dif
              3 noy
              6 lono
              7 lodif
              8 lonoy
              11 hino
              12 hidif
              13 hinoy
              18 intt
              19 rctt
              20 pmtt
              22 cvext
              25 pres
              26 smplf
              27 pmtv
              28 ain1
              29 ain2
              30 ain3
              31 ain4
              32 ain5
              33 ain6
              34 ain7
              35 ain8
```

```
36 ozonf
37 pre
38 lopre
39 hipre
```

---

er *xy*
lr *xy*
sr *xy*
x = | 0 | 1 | : Reply termination format (see "set format *format*" command)
y = | 0 | 1 | 2 | : Output format (see "set erec/lrec/srec format *format*" command)

These commands report the last long and short records stored or the dynamic data record. In the example below, the command requests a long record with no checksum, in ASCII format with text. For details on how to decode the flag fields within these records, see the "flags" command.

```
Send:       lr01
Receive:    lr01
            12:31 02-22-03 flags 54089100 no -8413E-1 noy -8485E-1
            lono -6471E-1 lonoy -6527E-1 pres 130.9 pmtt 53.2 intt
            80.0 rctt 80.0 convt 61 smplf 0.500 ozonf 0.000 pmtv -
            115
```

---

erec
This command returns a brief description of the main operating conditions at the time the command is issued (i.e. dynamic data). The example below shows a typical response. The format is defined by the current settings of "format" and "erec format" commands. For details on how to decode the flag fields within these records, see the "flags" command.

```
Send:       erec
Receive:    erec
            10:11 04-06-05 flags DD008000 no 0.000 noy 0.000 dif
            0.000  1 lono 147.500 lonoy 0.000 lodif 0.000  1 pmtv
            805.491 tempal 1 pres 172.278 pcal 150.000 smplf 0.000
            ozonf 0.050 hiavgtime 10 loavgtime 10 nobkg 0.000
            noybkg 0.000 nocoef 1.000 noycoef 1.000 difcoef 1.000
            lonocoef 1.000 lonoycoef 1.000 lodifcoef 1.000 norange
            100000.000 noyrange 100000.000 difrange 100000.000
            lonorange 100000.000 lonoyrange 100000.000 lodifrange
            100000.000
```

lrec
srec
lrec *xxxx yy*
srec *xxxx yy*
lrec *aa:bb oo-pp-qq yy*
srec *aa:bb oo-pp-qq yy*
xxxx = the number of past records
yy = the number of records to return (1 to 10)
aa = hours (01 to 24)
bb = minutes (01 to 59)
oo = month (01 to 12)
pp = day (01 to 31)
qq = year

These commands output long or short records and dynamic data. The output format is determined by the "set lrec format", and "set srec format" commands. The logging time is determined by the "set lrec per" and "set srec per" commands. In dual range, the long records and short records contain the high and low NO and NO_y concentrations. In single range the low NO and low NO_y values are set to 0 and the high NO and high NO_y are used. In NO or NO_y only mode, the pertinent high value used, other concentrations are set to 0. Concentrations are stored in either ppb or $\mu g/m^3$.

In the following example, there are 740 long records currently stored in memory. When the command lrec 100 5 is sent, the instrument counts back 100 records from the last record collected (record 740), and then returns 5 records: 640, 641, 642, 643, and 644. For details on how to decode the flag fields within these records, see the "flags" command.

```
Send:        lrec 5
Receive:     lrec 100 5
             11:03 02-22-03  flags 54089100 no 8416E-1 noy 8458E-1
             lono 6474E-1 lonoy 6506E-1 pres 131.4 pmtt 53.1 intt
             80.0 rctt 80.0 convt 61 smplf 0.500 ozonf 0.000 pmtv -
             116
             11:04 02-22-03  flags 54089100 no 8421E-1 noy 8457E-1
             lono 6477E-1 lonoy 6505E-1 pres 131.5 pmtt 53.1 intt
             80.0 rctt 80.0 convt 61 smplf 0.500 ozonf 0.000 pmtv -
             116
             11:05 02-22-03  flags 54089100 no 8440E-1 noy 8456E-1
             lono 6492E-1 lonoy 6505E-1 pres 131.5 pmtt 53.2 intt
             80.0 rctt 80.0 convt 61 smplf 0.500 ozonf 0.000 pmtv -
             116
             11:06 02-22-03  flags 54089100 no 8432E-1 noy 8483E-1
             lono 6486E-1 lonoy 6525E-1 pres 133.0 pmtt 53.0 intt
             80.0 rctt 80.0 convt 61 smplf 0.500 ozonf 0.000 pmtv -
             116
             11:07 02-22-03  flags 54089100 no 8442E-1 noy 8383E-1
             lono 6494E-1 lonoy 6449E-1 pres 131.5 pmtt 53.1 intt
```

```
80.0 rctt 80.0 convt 61 smplf 0.500 ozonf 0.000 pmtv -
116
```

where:

pmtv = PMT Voltage
pmtt = PMT Temperature
intt = Internal Temperature
rctt = Reaction Chamber Temperature
convt = External Converter Temperature
smplf = Sample Flow
ozonf = Ozonator Flow
pres = Pressure

---

erec format
lrec format
srec format
These commands report the output format for long and short records, and dynamic data in various formats such as ASCII without text, ASCII with text, or binary. The example below shows the output format for long records is ASCII with text, according to Table B–4.

```
Send:         lrec format
Receive:      lrec format 01
```

set erec format *format*
set lrec format *format*
set srec format *format*
These commands set the output format for long and short records, and dynamic data, according to Table B–4. The example below sets the long record output format to ASCII with text.

```
Send:         set lrec format 1
Receive:      set lrec format 1 ok
```

Table B–4. Record Output Formats

Format	Output Format
0	ASCII no text
1	ASCII with text
2	Binary data

erec layout
lrec layout
srec layout

These commands report the layout (string indicating the data formats) for data that is sent out in response to the erec, lrec, srec, and related commands. For details on how to interpret the strings, see "Record Layout Definition" later in this appendix.

```
Send:         lrec layout
Receive:      lrec layout %s %s %lx %f %f %f %f %f %f %f %f %f %f %f
              %f
              t D L ffffffffffff
              flags no noy hino hinoy pres pmtt intt rctt convt smplf
              ozonf pmtv
```

lrec mem size
srec mem size

These commands report the long and short records that can be stored with the current settings and the number of blocks reserved for long and short records. To calculate the number of short records per block, add 2 to the number of records, and then divide by the number of blocks. The example below shows that 7 blocks were reserved for long records and the maximum number of long records that can be stored in memory is 1426.

```
Send:         lrec mem size
Receive:      lrec mem size 1426 recs, 7 blocks
```

lrec per
srec per

These commands report the long and short records logging period. The example below shows that the short record logging period is 5 minutes.

```
Send:         srec per
Receive:      srec per 5 min
```

set lrec per *value*
set srec per *value*
value = | 1 | 5 | 15 | 30 | 60 |

These commands set the long and short records logging period to *value* in minutes. The example below sets the long record logging period to 15 minutes.

```
Send:         set lrec per 15
Receive:      set lrec per 15 ok
```

no of lrec
no of srec

These commands report the number of long and short records stored in the long and short records memory. The example below shows that 50 long records have been stored in the memory.

```
Send:         no of lrec
Receive:      no of lrec 50 recs
```

---

malloc lrec
malloc srec
These commands report the currently set memory allocation for long and short records in percent of total memory.

```
Send:         malloc lrec
Receive:      malloc lrec 10%
```

set malloc lrec *value*
set malloc srec *value*
value = 0 to 100

These commands set the percent of memory space allocated for long and short records to *value*, where *value* is a floating-point number representing percent. The example below sets the memory allocation for long records to 10.

Note Issuing these commands will clear all the logging data memory. All the existing records should be retrieved using appropriate commands, if required. ▲

```
Send:         set malloc lrec 10
Receive:      set malloc lrec 10 ok
```

---

set copy sp to lrec
set copy sp to srec
set copy sp to stream
These commands copy the current selections in scratch pad (sp) into the long record, short record, or streaming data list. The example below copies the current list in scratch pad into the long records list.

```
Send:         set copy sp to lrec
Receive:      set copy sp to lrec ok
```

---

set copy lrec to sp
set copy srec to sp
set copy stream to sp
These commands copy the current contents of the long record, short record, or streaming data list into the scratch pad (sp). These commands are useful in easy modification of current long record, short record, or

streaming data lists. The example below copies the current list of long records into the scratch pad.

```
Send:         set copy lrec to sp
Receive:      set copy lrec to sp ok
```

---

sp field *number*
This command reports the variable *number* and name stored at index in the scratch pad list. The example below shows that the field 5 in the scratch pad is set to index number 13, which is for the variable pressure.

```
Send:         sp field 5
Receive:      sp field 5 13 pres
```

set sp field *number value*
number = 1-32 is the maximum number of fields in long and short record lists.
number = 1-18 is for streaming data lists.

This command sets the scratch pad field *number* (item number in scratch pad list) to *value*, where *value* is the index number of a variable in the analog out variable list. Available variables and their corresponding index numbers may be obtained using the command "list var aout". The "set sp field" command is used to create a list of variables which can then be transferred into the long record, short record, or streaming data lists, using the "set copy sp to lrec", "set copy sp to srec", or "set copy sp to stream" commands.

```
Send:         set sp field 1 34
Receive:      set sp field 1 34 ok
```

---

stream per
This command reports the currently set time interval in seconds for streaming data.

```
Send:         stream per
Receive:      stream per 10
```

set stream per *number value*
number value = | 1 | 2 | 5 | 10 | 20 | 30 | 60 | 90 |120 | 180 | 240 | 300 |

This command sets the time interval between two consecutive streaming data strings to *number value* in seconds. The example below sets the number value to 10 seconds.

```
Send:         set stream per 10
Receive:      set stream per 10 ok
```

stream time
This command reports if the streaming data string will have a time stamp attached to it or not, according to Table B–5.

```
Send:         stream time
Receive:      stream time 0
```

set stream time *value*
This command enables *value*, where *value* is to attach or disable time stamp to streaming data string, according to Table B–5. The example below attaches a time stamp to streaming data.

```
Send:         set stream time 0
Receive:      set stream time 0 ok
```

Table B–5. Stream Time Values

Value	Stream Time
00	Attaches time stamp to streaming data string
01	Disables time stamp to streaming data string

Calibration

set cal no bkg
set cal noy bkg
set cal pre bkg
These commands will auto-calibrate the NO, NO_y, and prereactor backgrounds. If the instrument is set to manual NO_y mode, the response to "set cal no bkg" will be "can't, wrong settings". The example below shows a successful auto-calibration of the NO background.

```
Send:         set cal no bkg
Receive:      set cal no bkg ok
```

set cal no coef
set cal dif coef
set cal noy coef
set cal high no coef
set cal high dif coef
set cal high noy coef
set cal low no coef
set cal low dif coef
set cal low noy coef
These commands will auto-calibrate NO, DIF, and NO_y coefficients based on NO, DIF, and NO_y span gas concentrations. The high and low commands are only available in dual and auto range mode. If the mode is incorrect, the instrument responds with "can't, wrong settings". The

example below shows a successful auto-calibration of the low NO coefficient.

```
Send:         set cal low no coef
Receive:      set cal low no coef ok
```

---

no coef
dif coef
noy coef
high no coef
high dif coef
high noy coef
low no coef
low dif coef
low noy coef

These commands report NO, DIF, and NO_y coefficients in single range mode, or the high and low range coefficients in dual or auto range mode. If the mode is incorrect, the instrument responds with "can't, wrong settings". The example below reports that the NO coefficient is 1.000.

```
Send:         no coef
Receive:      no coef 1.000
```

set no coef *value*
set dif coef *value*
set noy coef *value*
set high no coef *value*
set high dif coef *value*
set high noy coef *value*
set low no coef *value*
set low dif coef *value*
set low noy coef *value*

These commands set the NO, DIF, and NO_y coefficients to user-defined values to *value*, where *value* is a floating-point representation of the coefficient. The example below sets the NO coefficient to 1.005.

```
Send:         set no coef 1.005
Receive:      set no coef 1.005 ok
```

---

no gas
dif gas
noy gas
high no gas
high dif gas
high noy gas
low no gas
low dif gas

low noy gas
These commands report NO, DIF, and NO_y span gas concentrations used to auto-calibrate low NO, DIF, and NO_y coefficients. The high and low commands are only available in dual and auto range mode. If the mode is incorrect, the instrument responds with "can't, wrong settings". The example below reports that the NO low span gas concentration is 240.0 ppb.

```
Send:         low no gas
Receive:      low no gas 2400E-1 ppb
```

set no gas *value*
set dif gas *value*
set noy gas *value*
set high no gas *value*
set high dif gas *value*
set high noy gas *value*
set low no gas *value*
set low dif gas *value*
set low noy coef *value*
These commands set the NO, DIF, and NO_y span gas concentrations used by the auto-calibration routine to *value*, where *value* is a floating-point representation of the gas concentration in current selected units. The gas units are the same as those chosen by the user. The example below sets the NO span gas concentration to 123.4 ppb.

```
Send:         set no gas 123.4
Receive:      set no gas 123.4 ok
```

---

no bkg
noy bkg
bkg no
bkg pre
These commands report the current NO, NO_y, and prereactor backgrounds. The example below reports that the NO background is 5.5 ppb.

```
Send:         no bkg
Receive:      no bkg 5.5 ppb
```

set no bkg *value*
set noy bkg *value*
set bkg no *value*
set bkg pre *value*
These commands are used to set NO, NO_y, and prereactor backgrounds to user-defined values to *value*, where *value* is a floating-point representation

of the background in current selected units. The example below sets the NO background to 5.5 ppb.

```
Send:         set no bkg 5.5
Receive:      set no bkg 5.5 ok
```

Keys/Display

push *button*
do
down
en
enter
he
help
le
left
me
menu
ri
right
ru
run
up
1
2
3
4
button = | do | down | en | enter | he | help | le | left | me | menu | ri | right | ru | run | up | 1 | 2 | 3 | 4 |

These commands simulate pressing the front panel pushbuttons. The numbers represent the front-panel soft keys, from left to right.

```
Send:         push enter
Receive:      push enter ok
```

isc
iscreen
This command retrieves the framebuffer data used for the display on the *i*Series instrument. It is 19200 bytes in size, 2-bits per pixel, 4 pixels per byte arranged as 320 by 240 characters. The data is sent in RLE encoded form to save time in transmission. It is sent as a type '5' binary C-Link response with no checksum.

The RLE encoding consists of a 0 followed by an 8-bit count of consecutive 0xFF bytes. The following 'c' code will expand the incoming data.

```
void    unpackDisplay ( void far* tdib, unsigned char far* rlescreen )
{
int i,j,k;
unsigned char far *sc4bpp, *sc2bpp, *screen, *ptr;

        ptr = screen = (unsigned char far *)malloc(19200);
        //RLE decode the screen
          for (i=0; i<19200 && (ptr - screen) < 19200; i++)
          {
                *(ptr++) = *(rlescreen + i);
                if (*(rlescreen + i) == 0)
                {
                unsigned char rlecount = *(unsigned char *)(rlescreen + ++i);
                        while (rlecount)
                        {
                                *(ptr++) = 0;
                                rlecount--;
                        }
                }
                else if (*(rlescreen + i) == 0xff)
                {
                 unsigned char rlecount = *(unsigned char *)(rlescreen + ++i);

                 while (rlecount)
                {
                        *(ptr++) = 0xff;
                        rlecount--;
                }
            }
        }
```

To convert this data into a BMP for use with windows, it needs to be turned into a 4BPP as that is the smallest windows can display. Also note that BMP files are upside down relative to this data, i.e. the top display line is the last line in the BMP.

---

sc

screen

This command is meant for backward compatibility on the C series. Screen information is reported using the “iscreen” command above.

```
Send:         screen
Receive:      screen
```

```
This is an I series
Instrument. Screen
Information not
available
```

Measurement Configuration

range no
range dif
range noy
high range no
high range dif
high range noy
low range no
low range dif
low range noy

These commands report NO, DIF, and NO_y range in single range mode, or the high and low ranges in dual or auto range mode. If the mode is incorrect, the instrument responds with "can't, wrong settings". The example below reports that the NO full-scale range is set to 50 ppb, according to Table B–6.

```
Send:         range no
Receive:      range no 3: 5000E-2 ppb
```

set range *Selection*
set high range *Selection*
set low range *Selection*

These commands select the NO, DIF, and NO_y full-scale ranges, according to Table B–6. The example below sets the NO full-scale range to 200 ppb.

```
Send:         set range 5
Receive:      set range 5 ok
```

Table B–6. Standard Ranges

Selection	ppb	µg/m³
0	5	10
1	10	20
2	20	50
3	50	100
4	100	200
5	200	500
6	C1	C1
7	C2	C2
8	C3	C3

custom *range*
range = | 1 | 2 | 3 |

This command reports the user-defined value of custom range 1, 2, or 3. The example below reports that custom range 1 is defined to 5.50 ppb.

```
Send:         custom 1
Receive:      custom 1 550E-2 ppb
```

set custom *range* **range** *value*
set custom 1 *value*
set custom 2 *value*
set custom 3 *value*
set custom 1 range *value*
set custom 2 range *value*
set custom 3 range *value*
These commands are used to set the maximum concentration for any of the three custom *ranges* 1, 2, or 3 to range *value*, where *value* is a floating-point number representing concentration in ppb or µg/m^3. The example below sets the custom 1 range to 55.5 ppb.

```
Send:         set custom 1 range 55.5
Receive:      set custom 1 range 55.5 ok
```

range mode
This command reports the current range mode.

```
Send:         range mode
Receive:      range mode single
```

set range mode *mode*

This command sets the current range mode to single, dual, or auto. The example below sets the range mode to single.

```
Send:         set range mode single
Receive:      set range mode single ok
```

gas mode
This command reports the current mode of sample, zero, or span. The example below reports that the gas mode is sample.

```
Send:         gas mode
Receive:      gas mode sample
```

---

set sample
set sample gas
These commands set the zero/span valves to the sample mode. The example below sets the instrument to sample mode, that is, the instrument is reading the sample gas.

```
Send:         set sample
Receive:      set sample ok
```

---

set zero
set zero gas
These commands set the zero/span valves to the zero mode. The example below sets the instrument to zero mode that is, the instrument is reading the sample gas.

```
Send:         set zero
Receive:      set zero ok
```

---

set span
set span gas
These commands set the zero/span valves to the span mode. The example below sets the instrument to span mode that is, the instrument is sampling span gas.

```
Send:         set span
Receive:      set span ok
```

---

gas unit
This command reports the current gas units (ppb or µg/m^3). The example reports that the gas unit is set to ppb.

```
Send:         gas unit
Receive:      gas unit ppb
```

set gas *unit*
unit = | ppb | µg/m^3 |

This command sets the gas units to ppb or µg/m^3. The example below sets the gas units to µg/m^3.

```
Send:         set gas unit ug/m3
Receive:      set gas unit ug/m3 ok
```

meas mode
This command reports which measurement mode (NO/NO_y, NO, NO_y, or prereactor) is active. The example below reports that the measurement mode is set to NO.

```
Send:         meas mode
Receive:      meas mode no
```

set meas mode *mode*
mode = | no/noy | no | noy | pre |

This command sets the instrument to NO/NO_y (auto) mode, manual NO mode, manual NO_y mode, or manual prereactor mode. The example below sets the instrument to the manual NO mode.

```
Send:         set meas mode no
Receive:      set meas mode no ok
```

pres comp
This command reports whether pressure compensation is on or off. The example below shows that pressure compensation is on.

```
Send:         pres comp
Receive:      pres comp on
```

set pres comp *onoff*
These commands turn the pressure compensation *on* or *off*. The example below turns pressure compensation off.

```
Send:         set pres comp off
Receive:      set pres comp off ok
```

temp comp
This command reports whether temperature compensation is on or off. The example below shows the temperature compensation is off.

```
Send:         temp comp
Receive:      temp comp off
```

set temp comp *onoff*
These commands turn the temperature compensation *on* or *off*. The example below turns temperature compensation off.

```
Send:         set temp comp off
Receive:      set temp comp off ok
```

Hardware Configuration

contrast
This command reports the screen's level of contrast. The example below shows the screen contrast is 50%, according to Table B–7.

```
Send:         contrast
Receive:      contrast 5:50%
```

set contrast *level*
This command sets the screen's *level* of contrast, according to Table B–7. The example below sets the contrast level to 50%.

```
Send:         set contrast 5
Receive:      set contrast 5 ok
```

Table B–7. Contrast Levels

Level	Contrast Level
0	0%
1	10%
2	20%
3	30%
4	40%
5	50%
6	60%
7	70%
8	80%
9	90%
10	100%

conv set temp
This command reports the temperature that the external converter is set to. The example below reports that the converter temperature is set to 325 °C.

```
Send:         conv set temp
Receive:      conv set temp 325 deg C
```

set conv set temp *value*
This command sets the temperature that the external converter is set to, where *value* is an integer representing degrees C. The example below sets the converter temperature to 325 °C.

```
Send:         set conv set temp
Receive:      set conv set temp 325 deg C ok
```

date
This command reports the current date. The example below reports the date as December 1, 2004.

```
Send:         date
Receive:      date 12-01-04
```

set date *mm-dd-yy*
mm = month
dd = day
yy = year

This command sets the date of the analyzer's internal clock. The example below sets the date to December 1, 2004.

```
Send:         set date 12-01-04
Receive:      set date 12-01-04 ok
```

---

set default params
This command sets all the parameters to their default values. This does not affect the factory-calibrated parameters.

```
Send:         set default params
Receive:      set default params ok
```

---

ozonator
This command reports the ozonator is on or off. The example below reports that the ozonator is on.

```
Send:         ozonator
Receive:      ozonator on
```

set ozonator *onoff*
These commands set the ozonator *on* or *off*. The example below sets the ozonator off.

```
Send:         set ozonator off
Receive:      set ozonator off ok
```

---

ozonator flow
This command reports the current ozonator flow. The example below reports that the current ozonator flow is 0.050 LPM.

```
Send:         ozonator flow
Receive:      ozonator flow 0.050 l/m
```

---

ozonator safety
This command reports the status of the ozonator safety on or off. The example below reports that the ozonator safety is on.

```
Send:         ozonator safety
Receive:      ozonator safety on
```

set ozonator safety *onoff*
These commands set the ozonator safety *on* or *off*. The example below sets the ozonator safety off.

```
Send:         set ozonator safety off
Receive:      set ozonator safety off ok
```

---

ozonator status
This command reports the status of the ozonator and safety. The example below reports that the ozonator is off.

```
Send:         ozonator status
Receive:      ozonator status off
```

---

pmt
pmt status
These commands report the status of the PMT on or off. The example below reports that the PMT is on.

```
Send:         pmt status
Receive:      pmt status on
```

set pmt *onoff*
These commands set the PMT *on* or *off*. The example below turns the PMT off.

```
Send:         set pmt off
Receive:      set pmt off ok
```

---

save
set save params
This command stores all current parameters in FLASH memory. It is important that each time instrument parameters are changed, that this command be sent. If changes are not saved, they will be lost in the event of a power failure. The example below saves the parameters to FLASH memory.

```
Send:         set save params
Receive:      set save params ok
```

---

time
This command reports the current time (24-hour time). The example below reports that the internal time is 2:15:30 pm.

```
Send:         time
Receive:      time 14:15:30
```

set time *hh:mm:ss*
hh = hours
mm = minutes
ss = seconds

This command sets the internal clock (24-hour time). The example below sets the internal time to 2:15 pm.

Note If seconds are omitted, the seconds default to 00. ▲

```
Send:         set time 14:15
Receive:      set time 14:15 ok
```

Communications Configuration

addr dns
This command reports the TCP/IP address for the domain name server.

```
Send:         addr dns
Receive:      addr dns 192.168.1.1
```

set addr dns *address*
This command sets the dns *address*, where *address* consists of four numbers ranging from 0-255 inclusive, separated by ".".

```
Send:         set addr dns 192.168.1.1
Receive:      set addr dns 192.168.1.1 ok
```

addr gw
This command reports the default TCP/IP gateway address.

```
Send:         addr gw
Receive:      addr gw 192.168.1.1
```

set addr gw *address*
This command sets the default gateway *address*, where *address* consists of four numbers ranging from 0-255 inclusive, separated by ".".

```
Send:         set addr gw 192.168.1.1
Receive:      set addr gw 192.168.1.1 ok
```

addr ip
This command reports the IP address of the analyzer.

```
Send:         addr ip
Receive:      addr ip 192.168.1.15
```

set addr ip *address*
This command sets the analyzer's IP *address*, where *address* consists of four numbers ranging from 0-255 inclusive, separated by ".".

```
Send:         set addr ip 192.168.1.15
Receive:      set addr ip 192.168.1.15 ok
```

---

addr nm
This command reports the IP netmask.

```
Send:         addr nm
Receive:      addr nm 255.255.255.0
```

set addr nm *address*
This command sets the nm *address*, where *address* consists of four numbers ranging from 0-255 inclusive, separated by ".".

```
Send:         set addr nm 255.255.255.0
Receive:      set addr nm 255.255.255.0 ok
```

---

baud
This command reports the current baud rate for the serial port (RS232/RS485). The example below reports that the current baud rate is 9600 baud.

```
Send:         baud
Receive:      baud 9600
```

set baud rate
rate = | 1200 | 2400 | 4800 | 9600 | 19200 | 38400 | 57600 | 115200 |

This command sets the instrument baud rate. The example below sets the instrument's baud rate to 9600.

Note After the command is sent, the baud rate of the sending device must be changed to agree with the instrument. ▲

```
Send:         set baud 9600
Receive:      set baud 9600 ok
```

---

dhcp
This command reports the current state of use of DHCP on or off. DHCP is used to assign an IP address to the analyzer automatically. The example below shows that DHCP is on.

```
Send:         dhcp
Receive:      dhcp on
```

set dhcp *onoff*
These commands enables and disables the DHCP service by either *on* or *off*. Changes to this parameter will only take effect when the analyzer is powered up. The example below sets the DHCP service on.

Note When DHCP is set to on, the user-supplied addr gw, addr dns, addr ip, and addr nm parameters are not used. ▲

```
Send:         set dhcp on
Receive:      set dhcp on ok
```

format
This command reports the current reply termination format. The example below shows that the reply format is 00, which means reply with no checksum, according to Table B–8.

```
Send:         format
Receive:      format 00
```

set format *format*
This command sets the reply termination *format*, where *format* is set according to Table B–8. The example below sets the reply termination format to checksum.

```
Send:         set format 01
Receive:      set format 01 ok
```

Table B–8. Reply Termination Formats

Format	Reply Termination
00	<CR>
01	<NL> sum xxxx <CR>

where xxxx = 4 hexadecimal digits that represent the sum of all the characters (bytes) in the message

host name
This command reports the host name string.

```
Send:         host name
Receive:      host name analyzer01
```

set host name *string*
This command sets the host name *string*, where *string* is 1-13 alphanumeric characters.

```
Send:         set host name analyzer01
Receive:      set host name analyzer01 ok
```

instr name
This command reports the instrument name.

```
Send:         instr name
Receive:      instr name
              NO-DIF-NOy Analyzer
              NO-DIF-NOy Analyzer
```

---

instrument id
This command reports the instrument id.

```
Send:         instrument id
Receive:      instrument id 42
```

set instrument id value
This command sets the instrument id to value, where value is a decimal number between 0 and 127 inclusive.

Note sending this command via RS-232 or RS-485 will require the host to use the new id for subsequent commands. 5

```
Send:         set instrument id 50
Receive:      set instrument id 50 ok
```

---

mode
This command reports what operating mode the instrument is in: local, service, or remote. The example below shows that the instrument is in the remote mode.

```
Send:         mode
Receive:      mode remote
```

set mode local
set mode remote
These commands set the instrument to local or remote mode. The example below sets the instrument to the local mode.

```
Send:         set mode local
Receive:      set mode local ok
```

---

program no
This command reports the analyzer's model information and program version number, which will be dependant on the current version.

```
Send:         program no
Receive:      program no iSeries 42iY 01.03.21.154
```

---

set layout ack
This command disables the stale layout/layout change indicator ('*') that is attached to each response if the layout has changed.

```
Send:         set layout ack
Receive:      set layout ack ok
```

I/O Configuration

analog iout range *channel*
This command reports the analog current output range setting for *channels*, where *channel* must be between 1 and 6, inclusive. The example below reports current output channel 4 to the 4-20 mA range, according to Table B–9. This command responds with "feature not enabled" if the I/O expansion board is not detected.

```
Send:         analog iout range 4
Receive:      analog iout range 4 2
```

set analog iout range *channel range*
This command sets analog current output *channel* to the *channel range* where *channel* is between 1 and 6 inclusive, and *range* is set according to Table B–9. The example below sets current output channel 4 to the 0-20 mA range. This command responds with "feature not enabled" if the I/O expansion board is not detected.

```
Send:         set analog iout range 4 1
Receive:      set analog iout range 4 1 ok
```

Table B–9. Analog Current Output Range Values

Range	Output Range
1	0-20 mA
2	4-20 mA
0 [cannot be set to this, but may report]	Undefined

analog vin *channel*
This command retrieves the analog voltage input *channel* data, both the calculated value and the actual voltage. In the example below, the "calculated" value of channel 1 is 75.325 degrees F, volts are 2.796. This command responds with "feature not enabled" if the I/O expansion board is not detected.

```
Send:         analog vin 1
Receive:      analog vin 1 75.325 2.796
```

analog vout range *channel*
This command reports the analog voltage output *channel* range, where *channel* is between 1 and 6 inclusive, according to Table B–10.

```
Send:         analog vout range 2
Receive:      analog vout range 2 3
```

set analog vout range *channel range*
This command sets analog voltage output *channel* to the range, where *channel* is between 1 and 6 inclusive, and *range* is set according to Table B–10. The example below sets channel 2 to the 0-10 V range.

```
Send:         set analog vout range 2 3
Receive:      set analog vout range 2 3 ok
```

Table B–10. Analog Voltage Output Range Values

Range	Output Range
1	0-1 V
2	0-100 mV
3	0-10 V
4	0-5 V
0 [cannot be set to this, but may report]	Undefined

dig in
This command reports the status of the digital inputs as a 4-digit hexadecimal string with the most significant bit (MSB) being input 16.

```
Send:         dig in
Receive:      dig in 0xff7f
```

din *channel*
This command reports the action assigned to input *channel* and the corresponding active state. The example below reports the input 1 to be assigned an index number 9 corresponding to action of "analog outputs to zero" with the active state being high.

```
Send:         din 5
Receive:      din 5 9 AOUTS TO ZERO high
```

set din *channel index state*
This command assigns digital input *channel* (1-16) to activate the action indicated by *index* (1-35), when the input transitions to the designated *state* (high or low). Use "list din var" command to obtain the list of supported *index* values and corresponding actions.

```
Send:         set din 1 3 high
Receive:      set din 1 3 high ok
```

dout *channel*
This command reports the index number and output variable and the active state assigned to output *channel*. The example below reports the input 2 to be assigned an index number 2 corresponding to "local/remote" with the active state being open.

```
Send:         dout 4
Receive:      dout 4 11 GEN ALARM open
```

set dout *channel index state*
This command assigns digital output *channel* to be assigned to the action associated with *index*, and assigns it an active state of *state* (open or closed).

```
Send:         set dout 4 11 open
Receive:      set dout 4 11 open ok
```

dtoa *channel*
This reports the outputs of the 6 or 12 Digital to Analog converters, according to Table B–11. The example below shows that the D/A #1 is 97.7% full-scale.

```
Send:         dtoa 1
Receive:      dtoa 1 97.7%
```

Note If the instrument is in a mode which does not provide a particular output, and that output is selected, the value will be 0.0. ▲

All channel ranges are user definable. If any customization has been made to the analog output configuration, the default selections may not apply. ▲

Table B–11. Default Output Assignment

D to A	Function	Single Range	Dual Range	Auto Range
1	Voltage Output	NO	High NO	High/Low NO
2	Voltage Output	DIF	High DIF	High/Low DIF
3	Voltage Output	NO_y	High NO_y	High/Low NO_y
4	Voltage Output	Not Used	Low NO	Range (NO_y)
5	Voltage Output	Not Used	Low DIF	Not Used
6	Voltage Output	Not Used	Low NO_y	Not Used
7	Current Output	NO	High NO	High/Low NO
8	Current Output	DIF	High DIF	High/Low DIF
9	Current Output	NO_y	High NO_y	High/Low NO_y
10	Current Output	Not Used	Low NO	Range (NO_y)

D to A	Function	Single Range	Dual Range	Auto Range
11	Current Output	Not Used	Low DIF	Not Used
12	Current Output	Not Used	Low NO_y	Not Used

list var aout
list var dout
list var din

These commands report the list of index numbers, and the variables (associated with that index number) available for selection in the current mode (determined by single/dual/auto, gas mode) for analog output, digital output and digital inputs. The index number is used to insert the variable in a field location in a list using "set sp *field index*". The example below reports the list of analog output, index numbers, and variables.

```
Send:         list var aout
Receive:      list var aout
              index variable
              0 none
              1 no
              2 dif
              3 noy
              18 intt
              19 rctt
              20 pmtt
              21 convt
              25 pres
              26 smplf
              27 pmtv
              28 ain1
              29 ain2
              30 ain3
              31 ain4
              32 ain5
              33 ain6
              34 ain7
              35 ain8
```

relay stat

This command reports the current relay logic normally "open" or normally "closed," if all the relays are set to same state, that is all open or all closed. The example below shows that the status when all the relays logic is set to normally "open".

```
Send:         relay stat
Receive:      relay stat open
```

Note If individual relays have been assigned different logic then the response would be a 4-digit hexadecimal string with the least significant byte (LSB) being relay no 1. ▲

For example:

```
Receive:      relay stat 0x0001 (indicates relay no 1 is set to
              normally open logic, all others are normally closed)
Receive:      relay stat 0x0005 (indicates relay no 1 and 3 are set
              to be normally open logic, all others are normally
              closed)
```

set relay open
set relay open *value*
set relay closed
set relay closed *value*
These commands set the relay logic to normally open or closed for relay number *value*, where *value* is the relay between 1 and 16. The example below sets the relay no 1 logic to normally open.

Note If the command is sent without an appended relay number then all the relays are assigned the set logic of normally open/closed. ▲

```
Send:         set relay open 1
Receive:      set relay open 1 ok
```

Record Layout Definition

The Erec, Lrec Srec layouts contain the following:

- A format specifier for parsing ASCII responses
- A format specifier for parsing binary responses

In addition to these the Erec Layout contains:

- A format specifier for producing the front-panel displays

Values are read in using either the ASCII or binary format specifiers and converted to uniform internal representations (32-bit floats or 32-bit integers). These values are converted into text for display on the screen using the format specifier for the front-panel display. Normally, the specifier used to parse a particular datum from the input stream will be strongly related to the specifier used to display it (such as, all of the floating point inputs will be displayed with an 'f' output specifier, and all of the integer inputs will be displayed with a 'd' specifier).

Format Specifier for ASCII Responses

The first line of the Layout response is the scanf-like parameter list for parsing the fields from an ASCII ERec response. Parameters are separated by spaces and the line is terminated by a \n (the normal line separator character). Valid fields are:

%s - parse a string
%d - parse a decimal number
%ld - parse a long (32-bit) decimal number
%f - parse a floating point number
%x - parse a hexadecimal number
%lx - parse a long (32-bit) hex number
%* - ignore the field

Note Signed versus unsigned for the integer values does not matter; it is handled automatically. ▲

Format Specifier for Binary Responses

The second line of the Layout response is the binary parameter list for parsing the fields from a binary response. Parameters MUST be separated by spaces, and the line is terminated by a '\n'. Valid fields are:

t - parse a time specifier (2 bytes)
D - parse a date specifier (3 bytes)
i - ignore one 8-bit character (1 byte)
e - parse a 24-bit floating point number (3 bytes: n/x)
E - parse a 24-bit floating point number (3 bytes: N/x)
f - parse a 32-bit floating point number (4 bytes)

c - parse an 8-bit signed number (1 byte)
C - parse an 8-bit unsigned number (1 byte)
n - parse a 16-bit signed number (2 bytes)
N - parse a 16-bit unsigned number (2 bytes)
m - parse a 24-bit signed number (3 bytes)
M - parse a 24-bit unsigned number (3 bytes)
l - parse a 32-bit signed number (4 bytes)
L - parse a 32-bit unsigned number (4 bytes)

There is an optional single digit d which may follow any of the numeric fields which indicates that after the field has been parsed out, the resulting value is to be divided by 10^d. Thus the 16-bit field 0xFFC6 would be interpreted with the format specifier 'n3' as the number -0.058.

Format Specifier for EREC Layout

The subsequent lines in the ERec Layout response describe the appearance of the full panel. The full instrument panel as it appears on the screen has two columns of lines. Each line is composed of three major components: (1) a text field, (2) a value field, and (3) a button. None of these three components is required. The text field contains statically displayed text.

The value field displays values which are parsed out of the response to a DATA/ERec command. It also displays, though background changes, alarm status. The button, when pressed, triggers input from either a dialog box or a selection list. There are five kinds of buttons, B, I, L, T, and N.

Each line in the layout string corresponds to one line on the display. The layout string describes each of the three major fields as well as translation mechanisms and corresponding commands.

Text

The first field in the layout string is the text. It is delimited by a ':'. The string up to the first ':' will be read and inserted in the text field of the line.

Value String

This is followed by a possible string enclosed in quotes that is used to place a string into the value field.

Value Source

The value source, which is the item (or word) number in the DATA/ERec response, appears next. This is followed by an optional bitfield designator. The datum identified by the value source can be printed as a string 's', hexadecimal 'x', decimal 'd', or floating point 'f', or binary 'b' number. Typically, bitfield extractions are only done for decimal or hexadecimal numbers.

Floating-point numbers can be followed with an optional precision specifier which will be used as an argument to printf's %f format (e.g., a field of '4' would be translated into the printf command of '%.3f'). Alternately, the special character '*' can precede the precision specifier; this causes an indirection on the precision specifier (which now becomes a field number).

This is useful when formatting, for example, numbers which have varying precision depending on the mode of the instrument.

Binary numbers can also have an optional precision specifier which is used to determine how many bits to print. For example, the specifier 'b4' will print the lowest four bits of the parsed number.

There are serious restrictions on where an 's' field may appear: currently sources 1 and 2 must be 's', and no others may be 's'.

Alarm Information

The value source is followed by optional alarm information, indicated by a commercial at sign '@' with a source indicator and a starting bit indicator. All alarm information is presumed to be two bits long (low and high). The bitfield extraction is performed on the integer part of the source. Typical alarm information would appear as '@6.4'.

Translation Table

Then, there appears an optional translation table within braces '{}'. This is a string of words separated by spaces. An example translation table would be '{Code_0 Code_1 Code_2 Code_3}'. The value, once extracted is used as a zero-based index into the translation table to determine the string to display.

Selection Table

Then there appears an optional selection table within parentheses '(...)'. This is a string of numbers separated by spaces '(0 1)'. The selection table lists the translation table entries which the user may select from when setting the parameter. This is not necessarily the same as the entries which may be displayed.

Button Designator

Then there appears an optional button designator. This will be one of 'B', 'I', 'L', 'T', or 'N'.

B- Indicates a button which pops up an input dialog prompting the user for a new value using the designated input format. The input format is specified from the 'B' through the subsequent semicolon.

I—Indicates a button which pops up a selection list with input translation. That is, the values read are translated before they are compared to the selection list options.

L—Indicates a button which pops up a selection list without any translation. The output value is number of the selected option.

T—Indicates a button which pops up a selection list with output translation. The number of the option selected is used as an index into the translation table to generate an output string.

N—Indicates a button which only sends the subsequent command to the instrument. No user-prompting happens.

The following string through an optional '|' or the end of the line is the command which is to be sent to the instrument upon the completion of the button selection. The command string should normally contain print-style formatting to include the user input. If a '|' is present, it indicates a

command which is sent to the instrument upon successful completion of the button command to update the value field.

This is not currently used.

Examples

Some examples ('\n' is the C syntax for an end-of-line character):

```
'Concentrations\n'
```

This is a single text-only line.

```
'\n'
```

This is a single blank line.

```
' NO:3s\n'
```

This is a line which appears slightly indented. The text field is 'NO', the value is taken from the third element of the data response, and interpreted as a string.

```
' NO:18sBd.ddd;set no coef %s\n'
```

This is a line which also appears slightly indented. The next field is also 'NO', but the value is taken from the eighteenth element of the data response, again interpreted as a string. A button appears on this line which, when pressed, pops up an input dialog which will state "Please enter a new value for NO using a d.ddd format." The string entered by the user is used to construct the output command. If the user enters, for example, '1.234', the constructed command will be 'set no coef 1.234'.

```
' NO:21f{Code_0 Code_1 Code_2 Code_3 Code_4 Code_5 Code_6
Code_7 Code_8 Code_9 Code_10 Code_11}Lset range no %d\n'
```

This is a line which appears slightly indented, the title is again 'NO', and the value the twenty-first element of the data response, interpreted as a floating-point number. There is a no-translation button which creates a selection list of twelve "Code nn" options. The number of the user selection is used to create the output command.

```
'Mode:6.12-13x{local remote service service}(0 1)Tset mode
%s\n'
```

This is a line which has a title of 'Mode', and value taken from the sixth field of the data response. There is a bitfield extraction of bits 12 through 13 from the source (the value type is not important here because the value is being translated to an output string). Once the bits have been extracted, they are shifted down to the bit-zero position. Thus, the possible values of this example will be 0 through 3. The translation list shows the words which correspond to each input value, the zeroth value appearing first (0 -> local, 1 -> remote, etc.). The selection list shows that only the first two values, in this case, are to be shown to the user when the button is pressed. The 'T' button indicates full translation, input code to string, and user selection number to output string.

```
'\xC'
```

This is a line that starts a new column (the \xC or ^L).

```
' Comp:6.11x{off on}Tset temp comp %s\n'
```

This shows that the bitfield end (the second part of a bitfield specification) is optional. The bitfield will be one bit long, starting in this case at the eleventh bit.

```
'Background:7f*8Bd.ddd;set o3 bkg %s\n'
```

This shows the use of indirect precision specifiers for floating point displays. The background value is taken from the 7th element, and the precision specifier is taken from the 8th. If the asterisk were not present, it would indicate instead that 8 digits after the decimal point should be displayed.

Appendix C
MODBUS Protocol

This appendix provides a description of the MODBUS Protocol Interface and is supported both over RS-232/485 (RTU protocol) as well as TCP/IP over Ethernet.

The MODBUS Commands that are implemented are explained in detail in this document. The MODBUS protocol support for the *i*Series enables the user to perform the functions of reading the various concentrations and other analog values or variables, read the status of the digital outputs of the analyzer, and to trigger or simulate the activation of a digital input to the instrument. This is achieved by using the supported MODBUS parameters listed below.

For details of the Model 42*i* NO_y MODBUS Protocol specification, see the following topics:

- "Serial Communication Parameters" on page C-1
- "TCP Communication Parameters" on page C-2
- "Application Data Unit Definition" on page C-2
- "Function Codes" on page C-3
- "MODBUS Parameters Supported" on page C-8

Additional information on the MODBUS protocol can be obtained at http://www.modbus.org. References are from MODBUS Application Protocol Specification V1.1a MODBUS-IDA June 4, 2004.

Serial Communication Parameters

The following are the communication parameters that are used to configure the serial port of the *i*Series to support MODBUS RTU protocol.

Number of Data bits	: 8
Number of Stop bits	: 1
Parity	: None
Data rate	: from 1200-115200 Baud (9600 is default)

TCP Communication Parameters

*i*Series Instruments support the MODBUS/TCP protocol. The register definition is the same as for the serial interface.

TCP connection port for MODBUS : 502

Application Data Unit Definition

Here are the MODBUS ADU (Application Data Unit) formats over serial and TCP/IP:

Serial:	Slave Address	Function Code	Data	Error Check
TCP/IP:	MBAP Header	Function Code	Data	

Slave Address

The MODBUS save address is a single byte in length. This is the same as the instrument ID used for C-Link commands and can be between 1 and 127 decimal (i.e. 0x01 hex to 0x7F hex). This address is only used for MODBUS RTU over serial connections.

Note Device ID ‘0’ used for broadcast MODBUS commands, is not supported. Device IDs 128 through 247 (i.e. 0x80 hex to 0xF7 hex) are not supported because of limitations imposed by C-Link. ▲

MBAP Header

In MODBUS over TCP/IP, a MODBUS Application Protocol Header (MBAP) is used to identify the message. This header consists of the following components:

Transaction Identifier	2 Bytes	0x0000 to 0xFFFF (Passed back in response)
Protocol Identifier	2 Bytes	0x00 (MODBUS protocol)
Length	2 Bytes	0x0000 to 0xFFFF (Number of following bytes)
Unit Identifier	1 Byte	0x00 to 0xFF (Passed back in response)

A Slave address is not required in MODBUS over TCP/IP because the higher-level protocols include device addressing. The unit identifier is not used by the instrument.

Function Code

The function code is a single byte in length. The following function codes are supported by the instrument:

Read Coils	:	0x01
Read Inputs	:	0x02
Read Holding Registers	:	0x03
Read Input Registers	:	0x04
Force (Write) Single Coil	:	0x05
Read Exception Status	:	0x06

If a function code is received that is not in this list, an invalid function exception is returned.

Data

The data field varies depending on the function. For more description of these data fields, see “Function Codes” below.

Error Check

In MODBUS over Serial an error check is included in the message. This is not necessary in MODBUS over TCP/IP because the higher-level protocols ensure error-free transmission. The error check is a two-byte (16 bit) CRC value.

Function Codes

This section describes the various function codes that are supported by the Model 42*i* NO_y.

(0x01/0x02) Read Coils / Read Inputs

Read Coils / Inputs read the status of the digital outputs (relays) in the instrument. Issuing either of these function codes will generate the same response.

These requests specify the starting address, i.e. the address of the first output specified, and the number of outputs. The outputs are addressed starting at zero. Therefore, outputs numbered 1–16 are addressed as 0–15.

The outputs in the response message are packed as one per bit of the data field. Status is indicated as 1 = Active (on) and 0 – Inactive (off). The LSB of the first data byte contains the output addressed in the query. The other outputs follow toward the high end of this byte, and from low order to high order in subsequent bytes. If the returned output quantity is not a multiple of eight, the remaining bits in the final data byte will be padded with zeros (toward the high order end of the byte). The Byte Count field specifies the quantity of complete bytes of data.

Note The values reported may not reflect the state of the actual relays in the instrument, as the user may program these outputs for either active closed or open. ▲

Request

Function code	1 Byte	0x01 or 0x02
Starting Address	2 Bytes	0x0000 to maximum allowed by instrument
Quantity of outputs	2 Bytes	1 to maximum allowed by instrument
Unit Identifier	1 Byte	0x00 to 0xFF (Passed back in response)

Response

Function code	1 Byte	0x01 or 0x02
Byte count	1 Byte	N*
Output Status	n Byte	N = N or N+1

*N = Quantity of Outputs / 8, if the remainder not equal to zero, then N=N+1

Error Response

Function code	1 Byte	0x01 or 0x02
Exception code	1 Byte	01=Illegal Function, 02=Illegal Address, 03=Illegal Data, 04=Slave Device Failure

Here is an example of a request and response to read outputs 2–15:

Request

Field Name	*(Hex)*
Function	0x01
Starting Address Hi	0x00
Starting Address Lo	0x02
Quantity of Outputs Hi	0x00
Quantity of Outputs Lo	0x0D

Response

Field Name	*(Hex)*
Function	0x01
Byte Count	0x03
Output Status 2–10	0xCD
Output Status 11–15	0x0A

The status of outputs 2–10 is shown as the byte value 0xCD, or binary 1100 1101. Output 10 is the MSB of this byte, and output 2 is the LSB. By convention, bits within a byte are shown with the MSB to the left, and the LSB to the right. Thus, the outputs in the first byte are '10 through 2', from left to right. In the last data byte, the status of outputs 15-11 is shown as the byte value 0x0A, or binary 0000 1010. Output 15 is in the fifth bit position from the left, and output 11 is the LSB of this byte. The four remaining high order bits are zero filled.

(0x03/0x04) Read Holding Registers / Read Input Registers

Read holding / input registers reads the measurement data from the instrument. Issuing either of these function codes will generate the same response. These functions read the contents of one or more contiguous registers.

These registers are 16 bits each and are organized as shown below. All of the values are reported as 32-bit IEEE standard 754 floating point format. This uses 2 sequential registers, least significant 16 bits first.

The request specifies the starting register address and the number of registers. Registers are addressed starting at zero. Therefore, registers numbered 1–16 are addressed as 0–15. The register data in the response message are packed as two bytes per register, with the binary contents right justified within each byte. For each register, the first byte contains the high order bits and the second contains the low order bits.

Request

Function code	1 Byte	0x03 or 0x04
Starting Address	2 Bytes	0x0000 to maximum allowed by instrument
Quantity of Registers	2 Bytes	1 to maximum allowed by instrument

Response

Function code	1 Byte	0x03 or 0x04
Byte count	1 Byte	2 x N*
Register value	N* x 2 Bytes	N = N or N+1

*N = Quantity of Registers

Error Response

Function code	1 Byte	Function code + 0x80
Exception code	1 Byte	01=Illegal Function, 02=Illegal Address, 03=Illegal Data, 04=Slave Device Failure

Here is an example of a request and response to read registers 10–13:

Request

Field Name	*(Hex)*
Function	0x03
Starting Address Hi	0x00
Starting Address Lo	0x09
No. of Registers Hi	0x00
No. of Registers Lo	0x04

Response

Field Name	*(Hex)*
Function	0x03
Byte Count	0x06
Register value Hi (10)	0x02
Register value Lo (10)	0x2B
Register value Hi (11)	0x00

Register value Lo (11)	0x00
Register value Hi (12)	0x00
Register value Lo (12)	0x64
Register value Hi (13)	0x00
Register value Lo (13)	0x64

The contents of register 10 are shown as the two byte values of 0x02 0x2B. Then contents of registers 11–13 are 0x00 0x00, 0x00 0x64 and 0x00 0x64 respectively.

(0x05) Force (Write) Single Coil

The force (write) single coil function simulates the activation of the digital inputs in the instrument, which triggers the respective action.

This function code is used to set a single action to either ON or OFF. The request specifies the address of the action to be forced. Actions are addressed starting at zero. Therefore, action number 1 is addressed as 0. The requested ON/OFF state is specified by a constant in the request data field. A value of 0xFF00 requests the action to be ON. A value of 0x0000 requests it to be OFF. All other values are illegal and will not affect the output. The normal response is an echo of the request, returned after the state has been written.

Request

Function code	1 Byte	0x05
Starting Address	2 Bytes	0x0000 to maximum allowed by instrument
Output Value	2 Bytes	0x0000 or 0xFF00

Response

Function code	1 Byte	0x05
Starting Address	2 Bytes	0x0000 to maximum allowed by instrument
Output Value	2 Bytes	0x0000 or 0xFF00

Error Response

Function code	1 Byte	Function code + 0x80
Exception code	1 Byte	01=Illegal Function, 02=Illegal Address, 03=Illegal Data, 04=Slave Device Failure

Here is an example of a request to write Coil 5 ON:

Request

Field Name	*(Hex)*
Function	05
Output Address Hi	00
Output Address Lo	05
Output Value Hi	FF
Output Value Lo	00

Response

Field Name	*(Hex)*
Function	05
Output Address Hi	00
Output Address Lo	05
Output Value Hi	FF
Output Value Lo	00

MODBUS Parameters Supported

The following Table C–1 through Table C–3 lists the MODBUS parameters supported for the Model 42*i* NO_y.

Table C–1. Read Coils for Model 42*i* NO_y

Coil Number	Status
1	AUTORANGE (NO)
2	LOCAL/REMOTE
3	SERVICE
4	UNITS
5	ZERO MODE
6	SPAN MODE
7	NO MODE
8	NOy MODE
9	NOT USED
10	PRE MODE
11	GEN ALARM
12	NO CONC MAX ALARM

Coil Number	Status
13	NO CONC MIN ALARM
14	DIF CONC MAX ALARM
15	DIF CONC MIN ALARM
16	NOy CONC MAX ALARM
17	NOy CONC MIN ALARM
18	NOT USED
19	NOT USED
20	NOT USED
21	NOT USED
22	INT TEMP ALARM
23	CHAMB TEMP ALARM
24	COOLER TEMP ALARM
25	NOT USED
26	EXT CONVERTER TEMP ALARM
27	NOT USED
28	PRESSURE ALARM
29	FLOW ALARM
30	OZONE FLOW ALARM
31	MOTHERBOARD STATUS ALARM
32	INTERFACE BD STATUS ALARM
33	I/O EXP BD STATUS ALARM
34	AUTORANGE
35	CONC ALARM
36	SAMPLE MODE
37	PURGE MODE
38	EXT CONVERTER STATUS ALARM
39	ZERO CHECK/CAL ALARM
40	SPAN CHECK/CAL ALARM

Table C–2. Read Registers for Model 42*i* NO_y

Register Number	Variable
40001&40002	NO
40003&40004	DIF

Register Number	Variable
40005&40006	NOy
40007&40008	NOT USED
40009&40010	NOT USED
40011&40012	LOW NO
40013&40014	LOW DIF
40015&40016	LOW NOy
40017&40018	NOT USED
40019&40020	NOT USED
40021&40022	HIGH NO
40023&40024	HIGH DIF
40025&40026	HIGH NOy
40027&40028	NOT USED
40029&40030	NOT USED
40031&40032	RANGE (NOy)
40033&40034	NOT USED
40035&40036	INTERNAL TEMPERATURE
40037&40038	CHAMBER TEMPERATURE
40039&40040	COOLER TEMPERATURE
40041&40042	NOT USED
40043&40044	EXT CONVERTER TEMP
40045&40046	NOT USED
40047&40048	NOT USED
40049&40050	CHAMBER PRESSURE
40051&40052	SAMPLE FLOW
40053&40054	PMT VOLTS
40055&40056	ANALOG IN 1
40057&40058	ANALOG IN 2
40059&40060	ANALOG IN 3
40061&40062	ANALOG IN 4
40063&40064	ANALOG IN 5
40065&40066	ANALOG IN 6
40067&40068	ANALOG IN 7
40069&40070	ANALOG IN 8
40071&40072	OZONATOR FLOW

Register Number	Variable
40073&40074	PREREACTOR
40075&40076	LOW PREREACTOR
40077&40078	HIGH PREREACTOR
40079&40080	NO CORRECTION CONC*
40081&40082	DIF CORRECTION CONC*
40083&40084	NOy CORRECTION CONC*
40085&40086	NOT USED
40087&40088	NOT USED
40089&40090	LOW NO CORRECTION CONC*
40091&40092	LOW DIF CORRECTION CONC*
40093&40094	LOW NOy CORRECTION CONC*
40095&40096	NOT USED
40097&40098	NOT USED
40099&40100	HIGH NO CORRECTION CONC*
40101&40102	HIGH DIF CORRECTION CONC*
40103&40104	HIGH NOy CORRECTION CONC*
40105&40106	NOT USED
40107&40108	NOT USED
401109&401110	CAPPILLARY TEMP

*If O_2 Correction Option is installed.

Table C–3. Write Coils for Model 42*i* NO_y

Coil Number	Action Triggered
101	ZERO MODE
102	SPAN MODE
103	NO MODE
104	NOy MODE
105	NOT USED
106	PRE MODE
107	SET BACKGROUND
108	CAL TO LOW SPAN
109	AOUTS TO ZERO
110	AOUTS TO FS
111	CAL TO HIGH SPAN

Appendix D
Geysitech (Bayern-Hessen) Protocol

This appendix provides a description of the Geysitech (Bayern-Hessen or BH) Protocol Interface and is supported both over RS-232/485 as well as TCP/IP over Ethernet.

The Geysitech Commands that are implemented are explained in detail in this document. The Geysitech protocol support for the *i*Series enables the user to perform the functions of reading the various concentrations and to trigger the instrument to be in sample/zero/span mode if valid for that instrument. This is achieved by using the supported Geysitech commands listed below.

For details of the Model 42*i* NO_y Geysitech Protocol specification, see the following topics:

- "Serial Communication Parameters" on page D-1
- "TCP Communication Parameters" on page D-2
- "Instrument Address" on page D-2
- "Abbreviations Used" on page D-2
- "Basic Command Structure" on page D-2
- "Block Checksum" on page D-3
- "Geysitech Commands" on page D-3

Serial Communication Parameters

The following are the communication parameters that are used to configure the serial port of the *i*Series to support Geysitech protocol.

Number of Data bits	: 8
Number of Stop bits	: 1
Parity	: None
Data rate	: from 1200-115200 Baud (9600 is default)

TCP Communication Parameters

*i*Series Instruments support the Geysitech/TCP protocol over TCP/IP. The register definition is the same as for the serial interface.

TCP connection port for Geysitech: 9882

Instrument Address

The Geysitech instrument address has a value between 0 and 127 and is represented by 3 digit ASCII number with leading zeros or leading spaces if required (e.g. Instrument address of 1 is represented as 001 or <SP><SP>1)

The instrument Address is the same as the Instrument ID used for C-Link and MODBUS commands. This can be set via the front panel.

The Instrument Address is represented by <address> in the examples throughout this document.

Note Device IDs 128 through 247 are not supported because of limitations imposed by the C-Link protocol. ▲

Abbreviations Used

The following is a list of abbreviations used in this document:

<CR> is abbreviation for Carriage Return (ASCII code 0x0D)

<STX> is abbreviation for Start of Text (ASCII code 0x02)

<ETX> is abbreviation for End of Text (ASCII code 0x03)

<SP> is abbreviation for space (ASCII code 0x20)

Basic Command Structure

The following is the basic structure of a Geysitech command:

<STX>Command text<ETX><BCC>

OR

<STX>Command text<CR>

Each Command is framed by control characters, <STX> at the start and terminated with either <ETX> or <CR>.

If a command is terminated with <ETX> then additional two characters <BCC> is attached after <ETX>, this is the block checksum.

Block Checksum <BCC>

The block checksum is calculated beginning with a seed value of 00000000, binary (0x00), and bitwise exclusive ORing with each of the characters of the command string (or response) including the framing characters <STX> and <ETX>. The checksum works as an error check. The command terminator determines the presence or absence of <BCC>.

If a command is terminated by <ETX> then the next two characters are the checksum, if the command is terminated with <CR> no checksum is attached

The block checksum is represented by two characters, which represent a 2 digit hex number (1byte). (e.g. 1 byte 0xAB hex checksum will be represented by the two characters 'A' & 'B')

The checksum is referred to as <BCC> throughout this document.

Geysitech Commands

The following commands are supported by the Geysitech protocol:

- Instrument Control Command (ST)
- Data Sampling/Data Query Command (DA)

Instrument Control Command (ST)

There are three control commands supported by the Geysitech protocol.

This <control command> is a single letter, which triggers an action in the instrument. These commands are active only when service mode is inactive and the zero/span option is present.

Command 'N' switches the instrument gas mode to Zero mode.

Command 'K' switches the instrument gas mode to Span mode.

Command 'M' switches the instrument gas mode to Sample mode.

The following are the different acceptable formats of the ST command:

<STX>ST<address><control command><ETX><BCC>

OR

<STX>ST<address><control command><CR>

OR

<STX>ST<address><SP><control command><CR>

OR

<STX>ST<address><SP><control command><ETX><BCC>

The <address> is optional, which means it can be left out completely. The <address> if present must match the Instrument Address. Additional space can be present after the <address>.

If the received command does not satisfy the above formats or if the <address> does not match the Instrument Address the command is ignored.

This is a sample command to switch the instrument to zero mode, instrument id 5:

```
<STX>ST005<SP>N<CR>
```

Data Sampling/Data Query Command (DA)

This command DA initiates a data transfer from the instrument. The instrument responds with measurement data, which depends on the range mode and is listed in "Measurements reported in response to DA command" below.

The command structure for a data query command is as follows:

<STX>DA<address><ETX><BCC>

The <address> is optional, which means it can be left out completely. The <address> if present must match the Instrument Address. Additional space can be present after the <address>.

If the <address> is left out then no space is allowed in the query string.

A command with no address is also a valid command.

The following are the different acceptable formats of the DA command with Instrument Address 5:

<STX>DA<CR>

<STX>DA005<CR>

<STX>DA<SP><SP>5<ETX><BCC>

<STX>DA<ETX><BCC>

The data query string is valid and will be answered with data transmission only if the command starts with <STX> which is followed by the characters DA, and the <address> (if present) matches the Instrument Address, and the command is terminated with either <CR> with no checksum or <ETX> followed by the correct checksum <BCC>.

Sample Data Reply String in response to Data Query Command (DA):

In response to a valid data query command (DA) the instrument responds in the following format:

<STX>MD02<SP><address><SP><measured value1><SP><status><SP><SFKT><SP><address+1><SP><measured value2><SP ><status><SP><SFKT><ETX><BCC>

The response uses the same command terminators as used by the received command i.e. if the received command was terminated with a <CR> the response is terminated with <CR> and if the command was terminated with a <ETX><BCC> the response is terminated with<ETX> and the computed checksum <BCC>.

The 02 after the MD indicates, that two measurements are present in the reply string, (a 03 for three measurements and so on, this will also determine the length of the reply string).

<address> is the Instrument Address. Each subsequent measurement attached to the response will have the <address + X> where X keeps incrementing by 1 for each measurement included.

<measured value> is the concentration value in currently selected gas units represented as exponential representation with 4 characters mantissa and 2 characters exponent, each with sign.

Mantissa: sign and 4 digits. The decimal point is assumed to be after the first digit and is not transmitted.

Exponent: sign and 2 digits.

Example:

-5384000.0 is represented as -5384+06

+0.04567 is represented as +4567-02

<status>: is formed by < operating status > and < error status > and separated by a space i.e.

<operating status><SP><error status>

Each of the two (<operating status> and <error status>) are formed by two characters each representing a 2 digit hex number which is one byte (8 Bits) operation status and one byte (8 Bits) error status.

These two bytes contain the information about the main operating conditions of the instrument at that instant. For details on how to interpret the status bytes refer to Table D–1 and Table D–2 below.

<SFKT>: is the space provided for future use for special function, it currently contains a string of ten 0's i.e. <0000000000>.

Example:

Geysitech Protocol with transmission of three concentrations (Instrument ID is 1, Operation Status is 03, Error Status is 04):

Data Query String: `<STX>DA<CR>`

Reply String:

```
<STX>MD03<SP>001<SP>+2578+01<SP>03 <SP>04<SP>0000000000 <SP>002 <SP>
                ↑          ↑                                     ↑
             Address  First Concentration(E-format)=25.78      Address+1

+5681+00<SP>03<SP>04<SP>0000000000<SP>003<SP>+1175+01<SP>03<SP>04<SP
  ↑                                     ↑        ↑
 Second Concentration = 5.681        Address+2  Third Concentration=11.75

0000000000<SP><CR>
```

The attached concentrations are in the selected gas units. The measurements that are attached to the response if not valid in a particular mode then a value of 0.0 will be reported.

Measurements reported in response to DA command

The following measurements reported in response to DA command are for the Model 42*i* NO_y.

Single Range Mode

The 4 measurements reported in single range mode include:

- NO
- DIF
- NO_y
- PRE

Dual/Auto Range Mode

The 8 measurements reported in dual or auto range modes include:

- low NO
- low DIF
- low NO_y
- low PRE
- high NO
- high DIF
- high NO_y
- high PRE

Operating and Error Status

See Table D–1 for operating status and Table D–2 for error status for the Model 42*i* NO_y.

Table D–1. Operating Status for Model 42*i* NO_y

	D7	D6	D5	D4		D3	D2	D1	D0
→ Bit	**8**	**7**	**6**	**5**		**4**	**3**	**2**	**1**
→ Hex-value	80	40	20	10		08	04	02	01
	MSB					LSB			
Operating status:									
Service Mode (On)	0	0	0	0		0	0	0	1
Maintenance (Local)	0	0	0	0		0	0	1	0
Zero gas (On)	0	0	0	0		0	1	0	0
Span gas (On)	0	0	0	0		1	0	0	0
Gas Unit Indication (ppm OR ppb)	0	0	0	1		0	0	0	0
Ozonator (Off)	0	0	1	0		0	0	0	0
PMT (Off)	0	1	0	0		0	0	0	0
Not used	1	0	0	0		0	0	0	0

Table D–2. Error Status for Model 42*i* NO_y

	D7	D6	D5	D4		D3	D2	D1	D0
→ Bit	**8**	**7**	**6**	**5**		**4**	**3**	**2**	**1**
→ Hex-value	80	40	20	10		08	04	02	01
	MSB					LSB			
Error status:									
Not Used	0	0	0	0		0	0	0	1
Not Used	0	0	0	0		0	0	1	0
Not Used	0	0	0	0		0	1	0	0
Any Temperature Alarm	0	0	0	0		1	0	0	0
Pressure Alarm	0	0	0	1		0	0	0	0
Sample Flow Alarm	0	0	1	0		0	0	0	0
Ozonator Flow Alarm	0	1	0	0		0	0	0	0
Not used	1	0	0	0		0	0	0	0

Appendix E
Standards for Trace Level Analyzers

The development of ultra-sensitive analytical analyzers for the measurement of trace quantities of pollutants such as NO, NO_2, or SO_2 has raised a number of questions concerning proper calibration procedures and equipment. Analyzers that in theory have detection limits below 1 ppb, may not in practice be useful due to inadequate and/or inaccurate calibration practices.

Thermo Fisher Scientific has in its development of Trace Level instrumentation used the same basic principles for calibration as for standard analyzers. However, enhanced emphasis on the zero air supply used for dilution of standard gases and for establishing a zero background signal is made.

Chemiluminescence NO/NO_x and fluorescence SO_2 analyzers (when properly designed) have bee shown in numerous research studies and compliance monitoring situations to be inherently linear over a wide dynamic range. Calibration is normally done using firs a zero gas then a span gas generated by dilution of a calibration gas cylinder. Dilution is done by dynamic mixing of accurately known flows of span gas and zero gas. For Trace Level analyzers, mass flow controllers that are NIST traceable are required. Nitric oxide and sulfur dioxide calibration standards between 1 and 10 ppm are readily available in specially treated cylinders, and have been shown to have excellent stability and accuracy. NIST traceable mass flow controllers with dull scale ranges from 20 sccm to 20,000 sccm are also readily available. It is therefore relatively straight forward to generate span gas concentration from below 1 ppb to 10 ppb assuming a suitable zero gas source is used. For example:

$$[NO]_{GENERATED} = [NO]_{SPAN} \times \frac{\text{NO Flow}}{\text{Total Flow}}$$

Assuming a calibration cylinder of 1 ppm, NO flow of 10 sccm, and a total flow of 10,000 sccm, allows generation of span concentration of 1 ppb. Using the specifications of the mass flow controllers and calibration cylinder, this concentration should be accurate to within ±5%. Multi-point concentrations from 0.5 ppb to 10 ppb may be similarly generated, establishing the linearity of the particular analyzer being calibrated.

Thermo Fisher Scientific believes it is not necessary to generate concentrations below these levels since the fundamental linearity of the instrumentation has been demonstrated.

If however, the zero air used for dilution and for establishing baseline conditions has impurity levels greater than several tenths of a ppb, the accuracy of the analyzer being calibrated may be severely jeopardized. A 0.5 ppb impurity level is equivalent to a 10% relative error for a 5 ppb concentration.

Ultra-zero ambient monitoring gases are available from gas suppliers, however, the typical analyses for NO_x and SO_2 impurities only guarantee levels below 5 ppb. In practice, Thermo Fisher Scientific's personnel as well as other users of Trace Level equipment have found these gases to be at least an order of magnitude better than what is guaranteed, and therefore are adequate for most purposes. Non-reactive and diffusion resistant regulators are required, and as the cylinder pressure falls below 500 psig, the integrity of the zero gas becomes more in question.

Rather than relying on cylinder sources for zero air, Thermo Fisher Scientific routinely uses zero air generate by "brute force", that is, by compression, chemical scrubbing and reaction. Ambient air that has been compressed and pressurized to give an output of about 25 psig is dried by passing the air through a heatless air dryer (for example) and then sent through a series of chemical reactors and/or scrubbers. Normally, these include indicating silica gel, Purafil, activated charcoal, and a fine (5 micron) particulate filter. When first used, this "brute force" approach actually can generate enhanced impurity levels for No_x and SO_2, as these gases desorb from the chemical reactors. However, after 24 to 48 hours of continuous operation, impurity levels will generally fall and stabilize below detection limits for the Trace Level analyzers. It is critical when using this type of zero air source to always maintain flow through the system. If flow is interrupted, even for a short period, a reconditioning time of up to 24 hours may be required.

The Model 42*i* Trace Level analyzer has zero air diagnostic capability built within the instrument. The monitor has three channels, a NO, NO_x, and prereactor channel. The prereactor channel mixes the sample with a high concentration of ozone prior to the detection chamber. This effectively creates a dynamic zero by removing any NO from the gas stream. If the zero air source being used is truly a good zero air, the background signals in the NO, NO_x, and prereactor modes are virtually identical (within 0.1 to 0.2 ppb due to pneumatic differences). If the background in the no and/or No_x channels are enhanced relative to the prereactor channel, the zero air source being used is inadequate. When calibrating the zero in the Model 42*i* Trace Level, the background levels are calculated and available in the Calibration Factors menu. Normal background levels are in the 0.5 to 1.5

ppb range, primarily due to the dark current of the photomultiplier tube, note due to impurities in the zero gas source.

In conclusion, tests by the United States Environmental Agency, Tennessee Valley Authority, Battelle National Labs, and THERMO FISHER SCIENTIFIC's Engineering Department have demonstrated that Trace Level analyzers are readily calibrated at the low concentration levels require for sub-ambient monitoring. Although extra care is required, primarily in zero air generation, users familiar with normal compliance requirements should be able with minimal additional effort to obtain valid concentration data.