# Model 5020*i*

**Instruction Manual**
Sulfate Particulate Analyzer (SPA)
Part Number 103259-00
22Jan2008

Thermo
SCIENTIFIC

© 2007 Thermo Fisher Scientific Inc. All rights reserved.

Specifications, terms and pricing are subject to change. Not all products are available in all countries. Please consult your local sales representative for details.

Thermo Fisher Scientific
Air Quality Instruments
27 Forge Parkway
Franklin, MA 02038
1-508-520-0430
www.thermo.com/aqi

# WEEE Compliance

This product is required to comply with the European Union's Waste Electrical & Electronic Equipment (WEEE) Directive 2002/96/EC. It is marked with the following symbol:

Thermo Fisher Scientific has contracted with one or more recycling/disposal companies in each EU Member State, and this product should be disposed of or recycled through them. Further information on Thermo Fisher Scientific's compliance with these Directives, the recyclers in your country, and information on Thermo Fisher Scientific products which may assist the detection of substances subject to the RoHS Directive are available at www.thermo.com/WEEERoHS.

# About This Manual

This manual provides information about installing, operating, maintaining, and servicing the Model 5020*i*. It also contains important alerts to ensure safe operation and prevent equipment damage. The manual is organized into the following chapters and appendixes to provide direct access to specific operation and service information.

- Chapter 1 “Introduction” provides an overview of the product features, describes the principle of operation, and lists the specifications.
- Chapter 2 “Installation” describes how to unpack, setup, and start-up the analyzer.
- Chapter 3 “Operation” describes the front panel display, the front panel pushbuttons, and the menu-driven software.
- Chapter 4 “Calibration” provides the procedures for calibrating the analyzer and describes the required equipment.
- Chapter 5 “Preventive Maintenance” provides maintenance procedures to ensure reliable and consistent instrument operation.
- Chapter 6 “Troubleshooting” presents guidelines for diagnosing analyzer failures, isolating faults, and includes recommended actions for restoring proper operation.
- Chapter 7 “Servicing” presents safety alerts for technicians working on the analyzer, step-by-step instructions for repairing and replacing components, and a replacement parts list. It also includes contact information for product support and technical information.
- Chapter 8 “System Description” describes the function and location of the system components, provides an overview of the software structure, and includes a description of the system electronics and input/output connections.
- Chapter 9 “Optional Equipment” describes the optional equipment that can be used with this analyzer.
- Appendix A “Warranty” is a copy of the warranty statement.
- Appendix B “C-Link Protocol Commands” provides a description of the C-Link protocol commands that can be used to remotely control an analyzer using a host device such as a PC or datalogger.

- Appendix C “MODBUS Protocol” provides a description of the MODBUS Protocol Interface and is supported both over RS-232/485 (RTU protocol) as well as TCP/IP over Ethernet.
- Appendix D “Geysitech (Bayern-Hessen) Protocol” provides a description of the Geysitech (Bayern-Hessen or BH) Protocol Interface and is supported both over RS-232/485 as well as TCP/IP over Ethernet.

## Safety and Equipment Damage Alerts

This manual contains important information to alert you to potential safety hazards and risks of equipment damage. Refer to the following types of alerts you may see in this manual.

Safety and Equipment Damage Alert Descriptions

| Alert | | Description |
|---|---|---|
| ⚠ | **DANGER** | A hazard is present that will result in death or serious personal injury if the warning is ignored. ▲ |
| ⚠ | **WARNING** | A hazard is present or an unsafe practice can result in serious personal injury if the warning is ignored. ▲ |
| ⚠ | **CAUTION** | The hazard or unsafe practice could result in minor to moderate personal injury if the warning is ignored. ▲ |
| ⚠ | **Equipment Damage** | The hazard or unsafe practice could result in property damage if the warning is ignored. ▲ |

Safety and Equipment Damage Alerts in this Manual

| Alert | | Description |
|---|---|---|
| ⚠ | **WARNING** | If the equipment is operated in a manner not specified by the manufacturer, the protection provided by the equipment may be impaired. ▲<br>The service procedures in this manual are restricted to qualified service personnel only. ▲<br>The Model 5020*i* is supplied with a three-wire grounding cord. Under no circumstances should this grounding system be defeated. ▲ |
| ⚠ | **Equipment Damage** | Do not attempt to lift the analyzer by the cover or other external fittings. ▲<br>**Equipment Damage** Some internal components can be damaged by small amounts of static electricity. A properly ground antistatic wrist strap must be worn while handling any internal component. If an antistatic wrist strap is not available, be sure to touch the instrument chassis before touching any internal components. When |

| Alert | Description |
|---|---|
| | the instrument is unplugged, the chassis is not at earth ground. ▲ |
| | This adjustment should only be performed by an instrument service technician. ▲ |
| | Handle all printed circuit boards by the edges only. ▲ |
| | Do not remove the panel or frame from the LCD module. ▲ |
| | The LCD module polarizing plate is very fragile, handle it carefully. ▲ |
| | Do not wipe the LCD module polarizing plate with a dry cloth, it may easily scratch the plate. ▲ |
| | Do not use Ketonics solvent or aromatic solvent to clean the LCD module, use a soft cloth moistened with a naphtha cleaning solvent. ▲ |
| | Do not place the LCD module near organic solvents or corrosive gases. ▲ |
| | Do not shake or jolt the LCD module. ▲ |

## WEEE Symbol

The following symbol and description identify the WEEE marking used on the instrument and in the associated documentation.

| Symbol | Description |
|---|---|
| | Marking of electrical and electronic equipment which applies to electrical and electronic equipment falling under the Directive 2002/96/EC (WEEE) and the equipment that has been put on the market after 13 August 2005. ▲ |

## Where to Get Help

Service is available from exclusive distributors worldwide. Contact one of the phone numbers below for product support and technical information or visit us on the web at www.thermo.com/aqi.

1-866-282-0430 Toll Free

1-508-520-0430 International

# Contents


**Chapter 1** **Introduction ..... 1-1**
Principle of Operation ..... 1-2
Specifications ..... 1-8

**Chapter 2** **Installation ..... 2-1**
Lifting ..... 2-1
Unpacking and Inspection ..... 2-1
Setup Procedure ..... 2-5
External Plumbing ..... 2-5
Electrical Connections ..... 2-11
Connecting External Devices ..... 2-12
Terminal Board PCB Assemblies ..... 2-12
I/O Terminal Board ..... 2-12
D/O Terminal Board ..... 2-14
25-Pin Terminal Board ..... 2-15
Startup ..... 2-16

**Chapter 3** **Operation ..... 3-1**
Display ..... 3-2
Pushbuttons ..... 3-3
Soft Keys ..... 3-4
Software Overview ..... 3-4
Power-Up Screen ..... 3-6
Run Screen Automatic Cycling ..... 3-6
Run Screen Manual Operating Mode ..... 3-8
Main Menu ..... 3-9
Range Menu ..... 3-10
$SO_4$ Range ..... 3-11
Set Custom Ranges ..... 3-11
Custom Ranges ..... 3-12
Measurement Timing Menu ..... 3-12
Averaging ..... 3-12
Sample/Filter ..... 3-13
Transition Time ..... 3-14
Set Cycle Time ..... 3-14
Calibration Factors Menu ..... 3-14
$SO_2$ Background ..... 3-15
$SO_2$ Span Coefficient ..... 3-16
Filter Background ..... 3-17

Background Time ..... 3-17
Reset User Calibration Defaults ..... 3-17
Calibration Menu ..... 3-17
Calibrate $SO_2$ Background ..... 3-18
Calibrate $SO_2$ Coefficient ..... 3-18
Calibrate Pressure ..... 3-19
Zero/Span Check Menu ..... 3-19
Next Time ..... 3-19
Period Hours ..... 3-20
Zero/Span/Purge Duration Minutes ..... 3-20
Zero/Span Averaging Time ..... 3-21
Zero/Span Ratio ..... 3-21
Instrument Controls Menu ..... 3-22
Flash Lamp ..... 3-22
Sample/Filter Mode ..... 3-22
Converter Oven Shutoff ..... 3-24
Use Ambient Readings ..... 3-24
Datalogging Settings ..... 3-24
Select SREC/LREC ..... 3-25
View Logged Data ..... 3-25
Number of Records ..... 3-26
Date and Time ..... 3-26
Erase Log ..... 3-27
Select Content ..... 3-27
Choose Item Type ..... 3-28
Concentrations ..... 3-28
Other Measurements ..... 3-29
Analog Inputs ..... 3-30
Commit Content ..... 3-30
Reset to Default Content ..... 3-31
Configure Datalogging ..... 3-31
Logging Period Min ..... 3-31
Memory Allocation Percent ..... 3-32
Data Treatment ..... 3-32
Communication Settings ..... 3-33
Serial Settings ..... 3-33
Baud Rate ..... 3-33
Data Bits ..... 3-34
Parity ..... 3-34
Stop Bits ..... 3-34
RS-232/RS-485 Selection ..... 3-35
Instrument ID ..... 3-35
Communication Protocol ..... 3-36
Streaming Data Configuration ..... 3-36
Streaming Data Interval ..... 3-37
5020SPA Compatible ..... 3-37

Choose Item Signal ..... 3-37
Concentrations ..... 3-38
Other Measurements ..... 3-38
Analog Inputs ..... 3-39
RS-232/RS-485 Selection ..... 3-39
TCP/IP Settings ..... 3-40
Use DHCP ..... 3-40
IP Address ..... 3-41
Netmask ..... 3-41
Gateway ..... 3-41
Host Name ..... 3-42
Network Time Protocol Server ..... 3-42
I/O Configuration ..... 3-42
Output Relay Settings ..... 3-43
Logic State ..... 3-43
Instrument State ..... 3-44
Alarms ..... 3-44
Non-Alarm ..... 3-45
Digital Input Settings ..... 3-45
Logic State ..... 3-46
Instrument Action ..... 3-46
Analog Output Configuration ..... 3-47
Allow Over/Under Range ..... 3-47
Select Output Range ..... 3-48
Minimum and Maximum Value ..... 3-48
Choose Signal To Output ..... 3-50
Analog Input Configuration ..... 3-51
Descriptor ..... 3-52
Units ..... 3-52
Decimal Places ..... 3-52
Number of Table Points ..... 3-53
Table Point ..... 3-53
Volts ..... 3-54
User Value ..... 3-54
Temperature Compensation ..... 3-54
Pressure Compensation ..... 3-55
Screen Contrast ..... 3-55
Service Mode ..... 3-56
Date/Time ..... 3-56
Timezone ..... 3-57
Diagnostics Menu ..... 3-57
Program Versions ..... 3-58
Voltages ..... 3-58
Motherboard Voltages ..... 3-59
Interface Board Voltages ..... 3-59
I/O Board Voltages ..... 3-59

External Converter Board ..... 3-60
Temperatures ..... 3-60
Pressure ..... 3-61
Flow ..... 3-61
Lamp Intensity ..... 3-61
Optical Span Test ..... 3-62
Analog Input Readings ..... 3-62
Analog Input Voltages ..... 3-62
Digital Inputs ..... 3-63
Relay States ..... 3-63
Test Analog Outputs ..... 3-64
Set Analog Outputs ..... 3-64
Instrument Configuration ..... 3-65
Contact Information ..... 3-65
Alarms Menu ..... 3-65
Internal Temperature ..... 3-66
Min and Max Internal Temperature Limits ..... 3-67
Chamber Temperature ..... 3-67
Min and Max Chamber Temperature Limits ..... 3-68
Converter Temperature ..... 3-68
Min and Max Converter Temperature Limits ..... 3-68
Converter Temperature Differential ..... 3-69
Permeation Oven Gas Temperature ..... 3-69
Min and Max Permeation Oven Temperature Limits ..... 3-69
Chamber Pressure ..... 3-70
Min and Max Pressure Limits ..... 3-70
Sample Flow ..... 3-71
Min and Max Sample Flow Limits ..... 3-71
Converter Flow ..... 3-71
Min and Max Converter Flow Limits ..... 3-72
Ambient Temperature ..... 3-72
Ambient Pressure ..... 3-72
Lamp Intensity ..... 3-72
Min and Max Lamp Intensity Limits ..... 3-73
Lamp Voltage ..... 3-73
Min and Max Lamp Voltage Limits ..... 3-73
Auto Timing ..... 3-74
Data Warning ..... 3-74
Zero and Span Check ..... 3-74
Max Zero and Span Offset ..... 3-74
Zero and Span Auto Calibration ..... 3-75
$SO_4$ Concentration ..... 3-75
Min and Max $SO_4$ Concentration Limits ..... 3-76
Min Trigger ..... 3-76
Motherboard Status ..... 3-77
Interface Status ..... 3-77

I/O Exp Status ..... 3-77
Ext Converter Status ..... 3-77
Service Menu ..... 3-77
Flash Voltage Adjustment ..... 3-78
Initial Flash Reference ..... 3-79
PMT Supply Settings ..... 3-79
Converter Temperature ..... 3-80
Chamber Pressure Calibration ..... 3-80
Calibrate Pressure Zero ..... 3-81
Calibrate Pressure Span ..... 3-81
Restore Default Pressure Calibration ..... 3-81
Converter Ambient Pressure Calibration ..... 3-82
Calibrate Converter Pressure Zero ..... 3-82
Calibrate Converter Pressure Span ..... 3-83
Restore Default Pressure Calibration ..... 3-83
Sample Flow Calibration ..... 3-84
Calibrate Sample Flow Zero ..... 3-84
Calibrate Sample Flow Span ..... 3-85
Restore Default Flow Calibration ..... 3-85
Converter Filter Flow Calibration ..... 3-85
Calibrate Converter Flow Zero ..... 3-86
Calibrate Converter Flow Span ..... 3-86
Restore Default Flow Calibration ..... 3-87
Input Board Test ..... 3-87
Analyzer Ambient Temperature Calibration ..... 3-87
Converter Ambient Temperature Calibration ..... 3-88
Analog Output Calibration ..... 3-88
Analog Output Calibrate Zero ..... 3-89
Analog Output Calibrate Full-Scale ..... 3-90
Analog Input Calibration ..... 3-90
Analog Input Calibration Zero ..... 3-91
Analog Input Calibrate Full-Scale ..... 3-91
Permeation Oven Settings ..... 3-91
Calibrate Gas Thermistor ..... 3-92
Water Bath ..... 3-92
Resistor ..... 3-92
Calibrate Oven Thermistor ..... 3-93
Permeation Oven Setpoint ..... 3-93
Factory Calibrate Gas Thermistor ..... 3-93
Low and High Points ..... 3-94
Set defaults ..... 3-94
Factory Calibrate Oven Thermistor ..... 3-95
Low and High Points ..... 3-95
Set defaults ..... 3-95
Display Pixel Test ..... 3-96
Restore User Defaults ..... 3-96

Password ..... 3-97
Set Password ..... 3-97
Lock Instrument ..... 3-97
Lock/Unlock and Local/Remote Operation ..... 3-97
Change Password ..... 3-98
Remove Password ..... 3-98
Unlock Instrument ..... 3-99

**Chapter 4 Calibration ..... 4-1**
Connecting Calibration Gases ..... 4-2
Zero Air Generation ..... 4-5
Ultra-Zero Grade Cylinders ..... 4-5
Commercial Heatless Air Dryers ..... 4-5
Absorbing Column ..... 4-5
Commercial Zero Air Generators ..... 4-6
Span Gas Generation ..... 4-6
Calibration Procedure ..... 4-7
Manual Calibration ..... 4-9
Semi-Automated Calibration ..... 4-11
Zero Adjust ..... 4-12
Span Adjust ..... 4-12
Fully Automated Zero and Span Checks ..... 4-13

**Chapter 5 Preventive Maintenance ..... 5-1**
Two-Month Maintenance ..... 5-1
Six-Month Maintenance ..... 5-1
Annual Maintenance ..... 5-2
Safety Precautions ..... 5-3
Cleaning the Outside Case ..... 5-3
Visual Inspection and Cleaning ..... 5-3
Fan Filter Inspection and Cleaning ..... 5-4
Lamp Voltage Check ..... 5-5
Denuder Cleaning and Coating ..... 5-5
Routine Flow Check ..... 5-6
External Filter Replacement ..... 5-7
Capillary Inspection and Cleaning ..... 5-7
Quartz Converter Core Replacement ..... 5-8
System Leak Testing ..... 5-10
Dynamic Zero Test ..... 5-12
Pump Rebuilding ..... 5-14
Filter Replacement ..... 5-15

**Chapter 6 Troubleshooting ..... 6-1**
Safety Precautions ..... 6-1
Troubleshooting Guides ..... 6-1

Board-Level Connection Diagrams ..... 6-12
Connector Pin Descriptions ..... 6-14
Service Locations ..... 6-30

**Chapter 7 Servicing ..... 7-1**
Safety Precautions ..... 7-1
Firmware Updates ..... 7-2
Accessing the Service Mode ..... 7-3
Analyzer Replacement Parts List ..... 7-3
Cable List ..... 7-4
External Device Connection Components ..... 7-5
Removing the Measurement Bench and Lowering the Partition Panel 7-6
Analyzer Fuse Replacement ..... 7-8
Analyzer Pump Replacement ..... 7-9
Analyzer Fan/Filter Replacement ..... 7-10
Flash Lamp Replacement ..... 7-11
Flash Lamp Voltage Adjustment ..... 7-12
Optical Bench Replacement ..... 7-13
Cleaning the Mirrors ..... 7-14
Flash Trigger Assembly Replacement ..... 7-14
Flash Intensity Assembly Replacement ..... 7-16
Photomultiplier Tube Replacement ..... 7-17
PMT High Voltage Power Supply Replacement ..... 7-19
PMT Voltage Adjustment ..... 7-20
DC Power Supply Replacement ..... 7-21
Analog Output Testing ..... 7-22
Analog Output Calibration ..... 7-25
Analog Input Calibration ..... 7-26
Calibrating the Input Channels to Zero Volts ..... 7-26
Calibrating the Input Channels to Full Scale ..... 7-27
Analyzer Pressure Transducer Assembly Replacement ..... 7-28
Analyzer Pressure Transducer Calibration ..... 7-29
Analyzer Flow Sensor Replacement ..... 7-31
Analyzer Flow Sensor Calibration ..... 7-32
Heater Assembly Replacement ..... 7-33
Internal Temperature Thermistor Replacement ..... 7-35
Analyzer Internal Temperature Calibration ..... 7-36
Input Board Replacement ..... 7-37
I/O Expansion Board (Optional) Replacement ..... 7-38
Digital Output Board Replacement ..... 7-39
Motherboard Replacement ..... 7-40
Measurement Interface Board Replacement ..... 7-41
Front Panel Board Replacement ..... 7-43
LCD Module Replacement ..... 7-44
Converter Replacement Parts List ..... 7-45
Removing the Converter and Lowering the Partition Panel ..... 7-47

Converter Electrical Fuse Replacement ..... 7-49
Converter Thermal Fuse Replacement ..... 7-50
Converter Pump Replacement ..... 7-50
Converter Flow Sensor Replacement ..... 7-51
Converter Flow Sensor Calibration ..... 7-51
Converter Pressure Transducer Replacement ..... 7-53
Converter Pressure Transducer Calibration ..... 7-54
Converter Soleniod Replacement ..... 7-56
Converter Heater Thermocouple Replacement ..... 7-56
Converter Ambient Thermocouple Replacement ..... 7-57
Converter Fan Replacement ..... 7-58
Temperature Control Board Replacement ..... 7-59
Converter Interface Board ..... 7-60
Service Locations ..... 7-60

**Chapter 8 System Description ..... 8-1**
Analyzer Hardware ..... 8-1
Optics ..... 8-2
Flash Lamp ..... 8-3
Condensing Lens ..... 8-3
Mirror Assembly ..... 8-3
Relay Lens ..... 8-3
Light Baffle ..... 8-3
Flash Lamp Trigger Assembly ..... 8-4
Reaction Chamber ..... 8-4
Bandpass Filter ..... 8-4
Photomultiplier Tube ..... 8-4
Photodetector ..... 8-4
Analyzer Flow Sensor ..... 8-4
Analyzer Pressure Transducer ..... 8-4
Capillary ..... 8-4
Analyzer Vacuum Pump ..... 8-4
Converter Hardware ..... 8-5
Temperature Control Board ..... 8-7
Converter Interface Board ..... 8-7
Converter Heaters ..... 8-7
Converter Core ..... 8-7
Sample/Filter Switching Valve ..... 8-7
Internal HEPA Filter ..... 8-7
Converter Vacuum Pump ..... 8-7
Converter Pressure Transducer ..... 8-7
Converter Flow Sensor ..... 8-8
Outlet Filter ..... 8-8
Denuder ..... 8-8
Converter External Temperature Sensor ..... 8-8
Software ..... 8-8

Instrument Control ..... 8-8
Monitoring Signals ..... 8-9
Measurement Calculations ..... 8-9
Operating Modes and Data Collection ..... 8-9
Cycle Based Operation ..... 8-10
Continuous Operation ..... 8-11
Output Communication ..... 8-12
Electronics ..... 8-13
Motherboard ..... 8-13
External Connectors ..... 8-13
Internal Connectors ..... 8-13
Measurement Interface Board ..... 8-14
Measurement Interface Board Connectors ..... 8-14
Flow Sensor Assembly ..... 8-14
Pressure Transducer Assembly ..... 8-15
Analyzer Internal Temperature Sensor ..... 8-15
Bench Heater ..... 8-15
PMT Power Supply Assembly ..... 8-15
Diagnostic LED ..... 8-15
Input Board ..... 8-15
Digital Output Board ..... 8-16
Front Panel Connector Board ..... 8-16
Flash Trigger Board ..... 8-16
Flash Intensity Board ..... 8-16
Converter Interface Board ..... 8-16
Converter Interface Board Connectors ..... 8-16
Converter Temperature Control Board ..... 8-17
Converter Temperature Control Board Connectors ..... 8-17
I/O Expansion Board (Optional) ..... 8-17
I/O Components ..... 8-18
Analog Voltage Outputs ..... 8-18
Analog Current Outputs (Optional) ..... 8-18
Analog Voltage Inputs (Optional) ..... 8-19
Digital Relay Outputs ..... 8-19
Digital Inputs ..... 8-19
Serial Ports ..... 8-20
RS-232 Connection ..... 8-20
RS-485 Connection ..... 8-21
Ethernet Connection ..... 8-21
External Accessory Connector ..... 8-21
Internal Permeation Span Source ..... 9-1

**Chapter 9**

**Optional Equipment ..... 9-1**
Permeation Tube Installation ..... 9-1
Computation of Concentrations ..... 9-3
Oven Installation and Configuration ..... 9-3

Permeation Tube Oven Calibration ..... 9-5
Setting Perm Oven Temperature..... 9-5
Setting Temperature with Water Bath..... 9-6
Setting Temperature with Known Resistance ..... 9-7
Determining Permeation Rate by Weight Loss..... 9-8
Determining Release Rate by Transfer Standard..... 9-8
I/O Expansion Board Assembly..... 9-9
25-Pin Terminal Board Assembly..... 9-9
Terminal Block and Cable Kits ..... 9-9
Cables ..... 9-10
Mounting Options..... 9-11

**Appendix A Warranty..... A-1**

**Appendix B C-Link Protocol Commands..... B-1**
Instrument Identification Number..... B-1
Commands ..... B-2
Accessing Streaming Data ..... B-3
Entering Units in PPB ..... B-3
Service Mode ..... B-3
Commands List..... B-3
Measurements ..... B-9
Alarms..... B-12
Diagnostics ..... B-16
Datalogging..... B-19
Calibration..... B-28
Keys/Display ..... B-30
Measurement Configuration ..... B-31
Hardware Configuration ..... B-36
Communications Configuration ..... B-39
I/O Configuration..... B-46
Record Layout Definition ..... B-51
Format Specifier for ASCII Responses..... B-52
Format Specifier for Binary Responses ..... B-52
Format Specifier for Front-Panel Layout ..... B-53
Text ..... B-53
Value String ..... B-53
Value Source ..... B-53
Alarm Information ..... B-54
Translation Table..... B-54
Selection Table..... B-54
Button Designator..... B-54
Examples..... B-55

**Appendix C** **MODBUS Protocol ..... C-1**
Serial Communication Parameters ..... C-1
TCP Communication Parameters ..... C-2
Application Data Unit Definition ..... C-2
Slave Address ..... C-2
MBAP Header ..... C-2
Function Code ..... C-3
Data ..... C-3
Error Check ..... C-3
Function Codes ..... C-3
(0x01/0x02) Read Coils / Read Inputs ..... C-3
(0x03/0x04) Read Holding Registers / Read Input Registers ..... C-5
(0x03/0x04) Read Holding Registers / Read Input Registers ..... C-6
(0x05) Force (Write) Single Coil ..... C-7
MODBUS Addresses Supported ..... C-9

**Appendix D** **Geysitech (Bayern-Hessen) Protocol ..... D-1**
Serial Communication Parameters ..... D-1
TCP Communication Parameters ..... D-2
Instrument Address ..... D-2
Abbreviations Used ..... D-2
Basic Command Structure ..... D-2
Block Checksum <BCC> ..... D-3
Geysitech Commands ..... D-3
Instrument Control Command (ST) ..... D-3
Data Sampling/Data Query Command (DA) ..... D-4
Measurements reported in response to DA command ..... D-6
Operating and Error Status ..... D-6

# Figures

**Figure 1–1.** 5020*i* System Flow Schematic ..... 1-3
**Figure 1–2.** Analytical Bench Flow Schematic ..... 1-4
**Figure 1–3.** Sample Mode While Operating in Filter Mode ..... 1-5
**Figure 1–4.** Sample Flow While Operating in Sample Mode ..... 1-6
**Figure 2–1.** Remove the Packing Material ..... 2-2
**Figure 2–2.** Removing the Shipping Screws ..... 2-3
**Figure 2–3.** Inspecting the Converter Core ..... 2-3
**Figure 2–4.** Quartz Converter Core Installation ..... 2-4
**Figure 2–5.** Recommended Plumbing Configuration ..... 2-7
**Figure 2–6.** Converter Rear Panel ..... 2-9
**Figure 2–7.** Analyzer Rear Panel ..... 2-10
**Figure 2–8.** Atmospheric Pressure Vent for Calibration Gases ..... 2-10
**Figure 2–9.** I/O Terminal Board Views ..... 2-13
**Figure 2–10.** D/O Terminal Board Views ..... 2-14
**Figure 2–11.** 25-Pin Terminal Board Views ..... 2-15
**Figure 3–1.** Front Panel Display ..... 3-2
**Figure 3–2.** Front Panel Pushbuttons ..... 3-3
**Figure 3–3.** Flowchart of Menu-Driven Software ..... 3-5
**Figure 3–4.** Pinout of Rear Panel Connector ..... 3-10
**Figure 4–1.** Rear Panel Calibration Plumbing Connections ..... 4-3
**Figure 4–2.** Calibration Gas Flows ..... 4-4
**Figure 5–1.** Inspecting and Cleaning the Fan ..... 5-4
**Figure 5–2.** Quartz Converter Core Replacement ..... 5-9
**Figure 5–3.** Pump Assembly ..... 5-15
**Figure 6–1.** Board-Level Connection Diagram – Common Electronics ..... 6-12
**Figure 6–2.** Board-Level Connection Diagram – Measurement System ..... 6-13
**Figure 6–3.** Board-Level Connection Diagram – Converter Module ..... 6-14
**Figure 7–1.** Properly Grounded Antistatic Wrist Strap ..... 7-2
**Figure 7–2.** Model 5020*i* Analyzer Component Layout ..... 7-6
**Figure 7–3.** Removing the Measurement Bench and Lowering the Partition Panel ..... 7-7
**Figure 7–4.** Replacing the Pump ..... 7-9
**Figure 7–5.** Replacing the Fan ..... 7-11
**Figure 7–6.** Replacing the Optical Bench ..... 7-14
**Figure 7–7.** Replacing the Flash Lamp and Flash Trigger Assembly ..... 7-16
**Figure 7–8.** Replacing the Flash Intensity Assembly ..... 7-17

**Figure 7–9.** Replacing the PMT ..... 7-18
**Figure 7–10.** Replacing the PMT High Voltage Power Supply (HVPS) ..... 7-20
**Figure 7–11.** Replacing the DC Power Supply ..... 7-22
**Figure 7–12.** Rear Panel Analog Input and Output Pins ..... 7-24
**Figure 7–13.** Replacing the Analyzer Pressure Transducer Assembly ..... 7-29
**Figure 7–14.** Replacing the Heater Assembly ..... 7-34
**Figure 7–15.** Replacing the Thermistor ..... 7-35
**Figure 7–16.** Replacing the Input Board ..... 7-37
**Figure 7–17.** Replacing the I/O Expansion Board (Optional) ..... 7-39
**Figure 7–18.** Rear Panel Board Connectors ..... 7-39
**Figure 7–19.** Replacing the Measurement Interface Board ..... 7-42
**Figure 7–20.** Replacing the Front Panel Board and the LCD Module ..... 7-44
**Figure 7–21.** Model 5020*i* Converter Component Layout ..... 7-47
**Figure 7–22.** Removing the Converter Plumbing and Electronics Assembly and Lowering the Partition Panel ..... 7-49
**Figure 7–23.** Replacing a Converter Fan ..... 7-59
**Figure 8–1.** Analyzer Hardware Components ..... 8-2
**Figure 8–2.** Converter Hardware Components ..... 8-6
**Figure 9–1.** Internal Permeation Span Source Flow Diagram ..... 9-2
**Figure 9–2.** Cal Oven Therm Resistor Screen ..... 9-5
**Figure 9–3.** Cal Gas Therm Bath Screen ..... 9-6
**Figure 9–4.** Cal Gas Therm Resistor Screen ..... 9-7
**Figure 9–5.** Rack Mount Option Assembly ..... 9-12
**Figure 9–6.** Bench Mounting ..... 9-13
**Figure 9–7.** EIA Rack Mounting ..... 9-14
**Figure 9–8.** Retrofit Rack Mounting ..... 9-15
**Figure B–1.** Flags ..... B-12

# Tables

**Table 1–1.** Model 5020*i* Specifications ..... 1-8
**Table 2–1.** I/O Terminal Board Pin Descriptions ..... 2-13
**Table 2–2.** D/O Terminal Board Pin Descriptions ..... 2-14
**Table 2–3.** 25-Pin Terminal Board Pin Descriptions ..... 2-16
**Table 3–1.** Front Panel Pushbuttons ..... 3-3
**Table 3–2.** Default Analog Outputs ..... 3-10
**Table 3–3.** Analog Output Zero to Full Scale Values ..... 3-49
**Table 3–4.** Signal Types Group Choices ..... 3-50
**Table 5–1.** Recommended Maintenance Schedule ..... 5-2
**Table 6–1.** Troubleshooting - Power-Up Failures ..... 6-2
**Table 6–2.** Troubleshooting - Calibration Failures ..... 6-3
**Table 6–3.** Troubleshooting - Measurement Failures ..... 6-5
**Table 6–4.** Troubleshooting - Converter Failures ..... 6-8
**Table 6–5.** Troubleshooting - Alarm Messages ..... 6-9
**Table 6–6.** Motherboard Connector Pin Descriptions ..... 6-14
**Table 6–7.** Measurement Interface Board Connector Pin Descriptions ..... 6-19
**Table 6–8.** Front Panel Board Connector Pin Diagram ..... 6-22
**Table 6–9.** I/O Expansion Board (Optional) Connector Pin Descriptions ..... 6-24
**Table 6–10.** Digital Output Board Connector Pin Descriptions ..... 6-25
**Table 6–11.** Input Board Connector Pin Descriptions ..... 6-26
**Table 6–12.** Flash Trigger Pack Pin Descriptions ..... 6-27
**Table 6–13.** Flash Intensity Assembly Pin Descriptions ..... 6-27
**Table 6–14.** Converter Interface Board ..... 6-27
**Table 6–15.** Converter Temperature Control CONV BTM Board ..... 6-29
**Table 7–1.** Model 5020*i* Analyzer Replacement Parts ..... 7-3
**Table 7–2.** Model 5020*i* Cables ..... 7-4
**Table 7–3.** External Device Connection Components ..... 7-5
**Table 7–4.** Analog Output Channels and Rear Panel Pin Connections ..... 7-24
**Table 7–5.** Analog Input Channels and Rear Panel Pin Connections ..... 7-28
**Table 7–6.** Model 5020*i* Converter Replacement Parts ..... 7-45
**Table 8–1.** RS-232 DB9 Connector Pin Configurations ..... 8-21
**Table 8–2.** RS-485 DB9 Connector Pin Configuration ..... 8-21
**Table 9–1.** Cable Options ..... 9-10
**Table 9–2.** Color Codes for 25-Pin and 37-Pin Cables ..... 9-10
**Table 9–3.** Mounting Options ..... 9-11
**Table B–1.** Command Response Error Descriptions ..... B-2

**Table B–2.** C-Link Protocol Commands....B-3
**Table B–3.** Averaging Times....B-9
**Table B–4.** Alarm Trigger Values....B-16
**Table B–5.** Record Output Formats....B-23
**Table B–6.** Stream Time Values....B-27
**Table B–7.** Standard Ranges....B-32
**Table B–8.** Contrast Levels....B-36
**Table B–9.** Reply Termination Formats....B-42
**Table B–10.** Allow Mode Command Values....B-45
**Table B–11.** Power Up Mode Command Values....B-45
**Table B–12.** Set Layout Ack Values....B-46
**Table B–13.** Analog Current Output Range Values....B-47
**Table B–14.** Analog Voltage Output Range Values....B-48
**Table B–15.** Default Output Assignment....B-49
**Table C–1.** Read Coils for Model 5020*i*....C-9
**Table C–2.** Read Registers for 5020i....C-10
**Table C–3.** Write Coils for 5020*i*....C-12
**Table D–1.** Operating Status for Model 5020*i*....D-6
**Table D–2.** Error Status for Model 5020*i*....D-7

# Chapter 1
# Introduction

The Model 5020*i* Sulfate Particulate Analyzer (SPA) combines a continuous sulfate to sulfur dioxide ($SO_4$ to $SO_2$) converter and a trace-level version of Thermo Fisher Scientific's pulsed fluorescence $SO_2$ analyzer to provide a state of the art system for real-time measurement of sulfate aerosol. Like other Thermo Fisher Scientific analyzers, the 5020*i* features easy to use menu-driven software, advanced diagnostics, and RS-232/485 based remote access and control for unsurpassed flexibility and reliability. The Model 5020*i* has the following features:

- 320 x 240 graphics display
- Menu-driven software
- Field programmable ranges
- User-selectable ranges
- Multiple user-defined analog outputs
- Analog input options
- High sensitivity
- Linearity through all ranges
- Internal sample pump
- Compensation for changes in ambient temperature and pressure
- User-selectable digital input/output capabilities
- Standard communications features include RS232/485 and Ethernet
- C-Link, MODBUS, Geysitech (Bayern-Hessen), streaming data, and NTP (Network Time Protocol) protocols. Simultaneous connections from different locations over Ethernet.

For details of the analyzer's principle of operation and product specifications, see the following topics:

- "Principle of Operation" describes the analyzer's operating principles.
- "Specifications" provides a list of the analyzer's performance specifications.

Thermo Fisher Scientific is pleased to supply this sulfate analyzer. We are committed to the manufacture of instruments exhibiting high standards of quality, performance, and workmanship. Service personnel are available for assistance with any questions or problems that may arise in the use of this instrument. For more information on servicing, see the "Servicing" chapter.

## Principle of Operation

The Model 5020*i* measures sulfate by drawing a continuous stream of sample across a hot reactive surface that reduces sulfate particles in the sample stream to sulfur dioxide gas. The sulfur dioxide is then measured using an enhanced version of Thermo Fisher Scientific's well-established pulsed fluorescence analyzer. When running with a 60 second averaging time, this analyzer is capable of detecting $SO_2$ at concentrations of 0.05 ppb or less. This corresponds to a sulfate concentration of slightly below 0.20 micrograms per cubic meter (µg $m^3$) at standard conditions of temperature and pressure.

The Model 5020*i* quantifies sulfate by comparing the signal produced when aerosol-laden sample is drawn directly into the converter to a background signal that is produced when the sample stream is run through a high-efficiency particulate aerosol filter that removes the sulphate before conversion. The difference in signal between the filtered and unfiltered sample can be attributed to sulfur dioxide that is formed from sulfate particles in the unfiltered sample stream. By routinely switching between the filtered and unfiltered sample streams, the instrument readings can be continuously adjusted or corrected for changes in background signal that might be produced by traces of $SO_2$ or other interfering gases. This frequent adjustment for changes in background signal improves the system stability, which in turn improves the limit of detection.

As illustrated in **Figure 1–1**, the Model 5020*i* hardware consists of two separate modules, a converter and an analyzer. The two modules are connected by a Teflon line and electrical umbilical. The Teflon line carries the post-conversion sample stream from the converter to the analyzer and the electrical umbilical carries control signals and status information back and forth between the two modules.

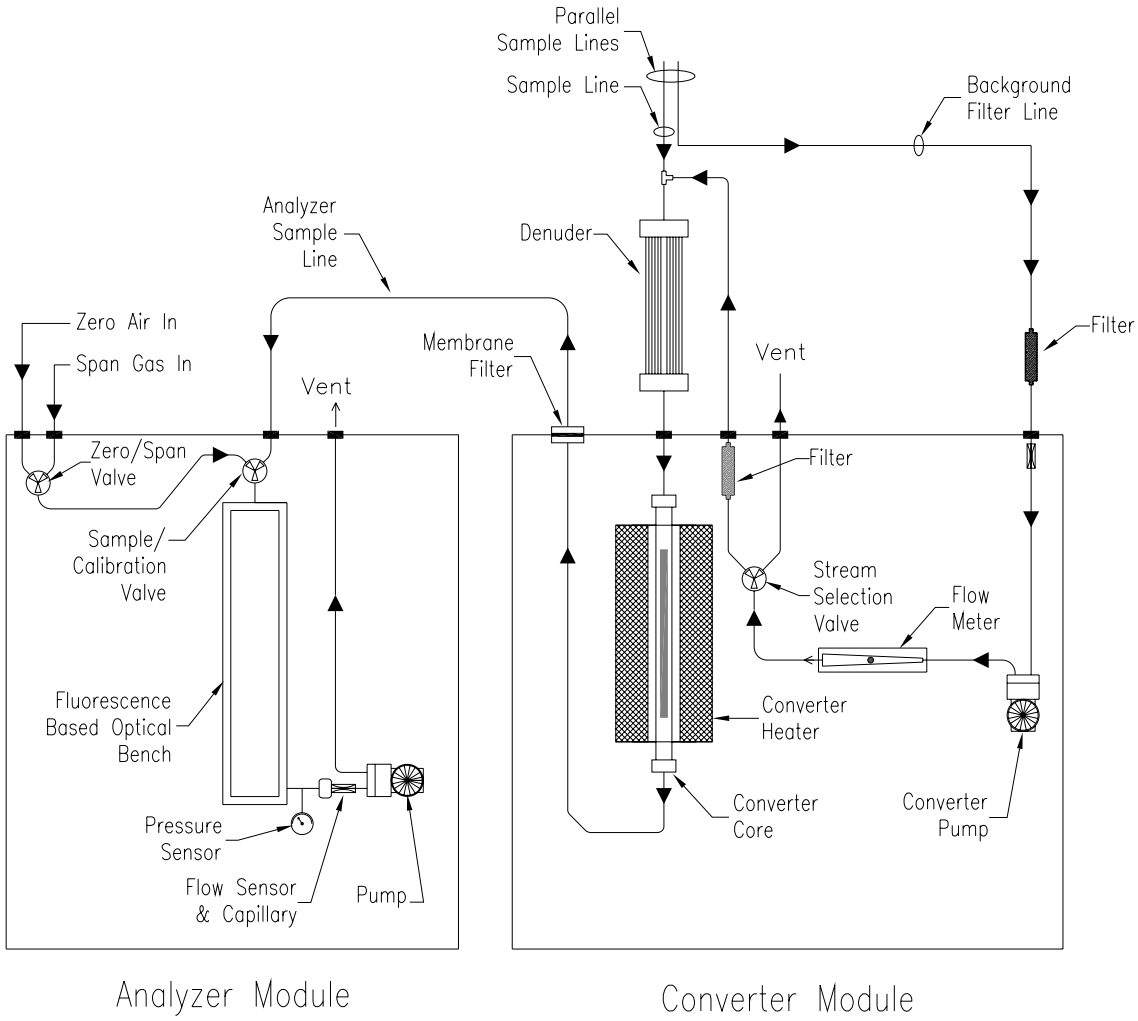


**Figure 1–1.** 5020*i* System Flow Schematic

The analyzer module is an adapted version of Thermo Fisher Scientific's Model 43*i*-TLE, Enhanced Trace Level $SO_2$ analyzer -and includes the fluorescence based detector, an embedded computer system and the additional electronics necessary to control the converter module. The analyzer module also contains a diaphragm pump that draws approximately 450 cc per minute of flow from the sampling system, through the converter core and delivers it to the analyzer bench. The pulsed fluorescence measurement operates on the principle that $SO_2$ molecules become excited by absorbing ultraviolet (UV) light at one wavelength and then emit UV light at a different wavelength when decaying back to a lower energy state. The pulsed fluorescence technique is extremely sensitive and, when

combined with a high efficiency $SO_4$ to $SO_2$ converter, it allows detection and measurement of sulfate at concentrations that are typical of many ambient environments. **Figure 1–2** is a schematic representation of the analytical bench.

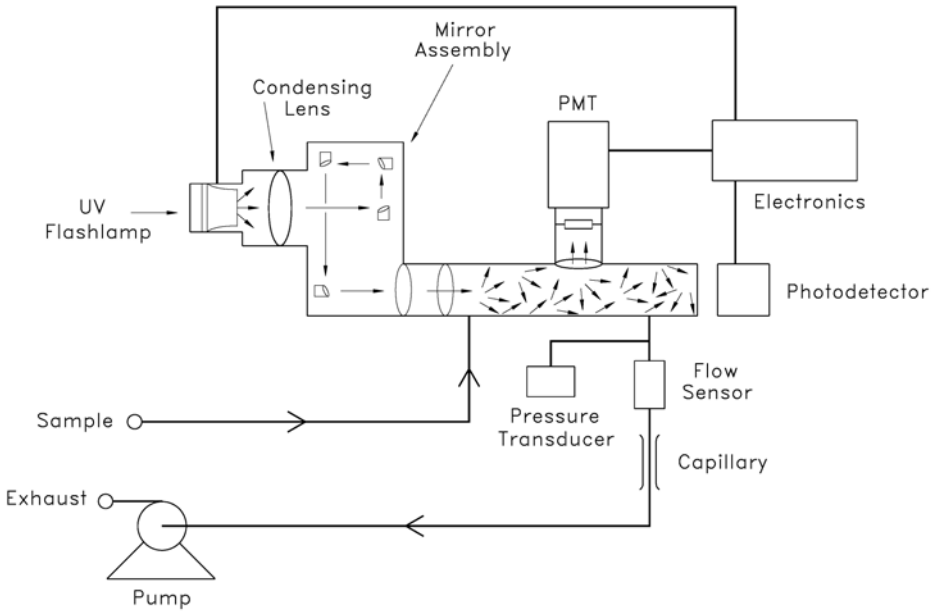


**Figure 1–2.** Analytical Bench Flow Schematic

The converter module, shown on the right side of the diagram in **Figure 1–1**, contains the high-temperature reactor, a power supply an internal pump that draws in the background, or filtered air sample, and the hardware and electronics that are necessary to allow switching between the filtered and unfiltered air streams.

The converter flows are shown in schematic form in **Figure 1–3** and **Figure 1–4**. **Figure 1–3** shows the flow path when the unit is running in Filter Mode (filtered air is being pulled through the converter). **Figure 1–4** shows the flow path when the unit is running in Sample Mode.

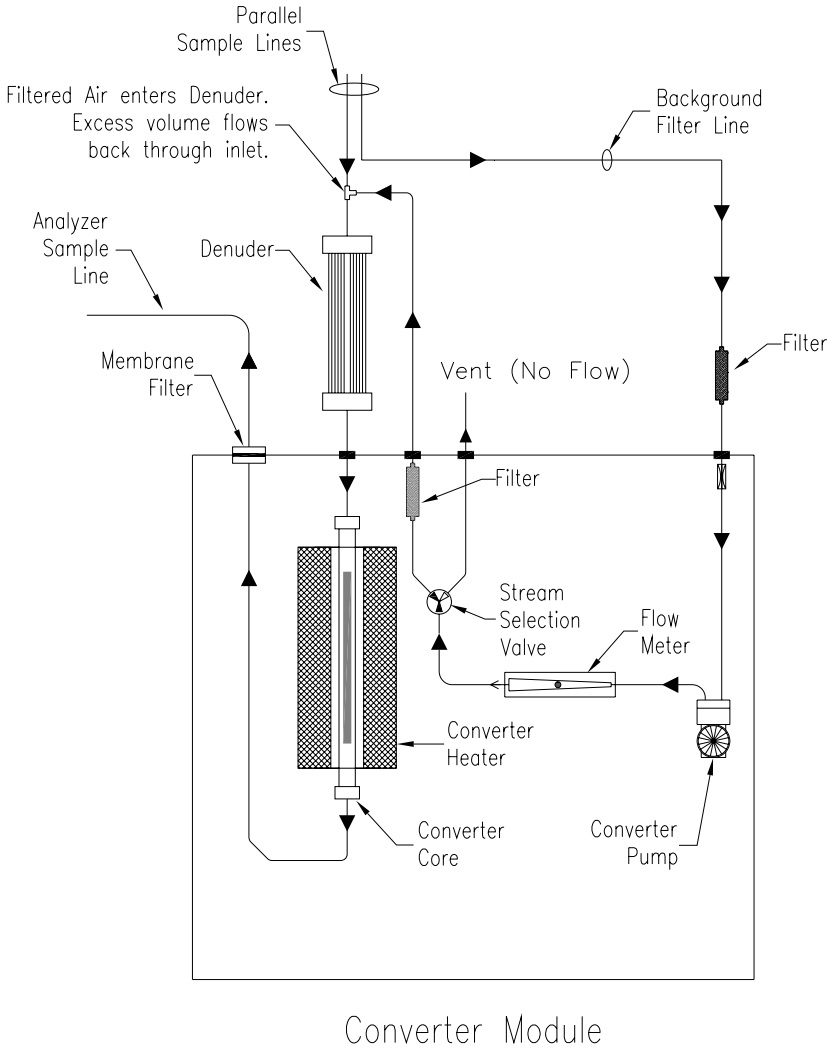


**Figure 1–3.** Sample Mode While Operating in Filter Mode

As these figures illustrate, the filtered background stream and the unfiltered sample stream and are both taken from the same location outside the shelter. This may be achieved by placing a tee fitting in the sample inlet line, or by running parallel sample lines.

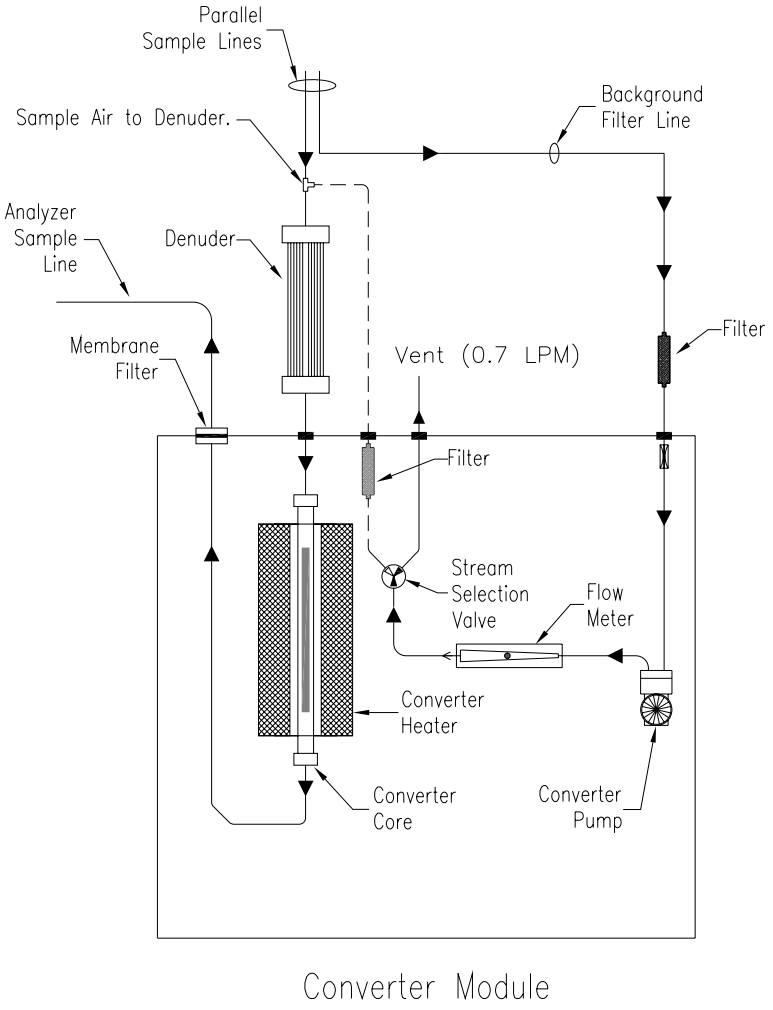


**Figure 1–4.** Sample Flow While Operating in Sample Mode

The background sample stream passes through an external HEPA filter before entering the converter module and then passes through a capillary flow restrictor and into the vacuum side of the pump. The converter pump outlet is connected to a flow sensor and then to three-way solenoid valve that directs the flow either to the VENT bulkhead when the unit is in sample mode or through a second filter and out through the FILTER OUT bulkhead when operating in filter mode. When the unit is operating in filter mode, the filtered air stream floods the sample line, displacing the unfiltered air stream. The filtered background or sample air is then drawn through the converter core by the pump located in the analyzer module. Note that the "tee" connecting the filtered air stream back into the sample line is located just upstream of the denuder so that air entering the converter must first pass through the denuder, regardless of whether the system is operating in sample mode or filter mode. The denuder functions

to remove $SO_2$ and other acid gases from the air stream, thus lowering the background signal and improving the limit of detection.

Note also that when the unit is operating in the filter mode, the converter pump provides approximately 650 to 700 cc per minute of airflow, which is more than the analyzer pump draws. The excess filtered air flows backwards through the sample line toward the inlet system. This stream switching arrangement, which uses pressure from the converter pump to control stream selection, is utilized instead of simpler switching valves because switching valves could potentially introduce bias by removing some particles from the sample stream.

Any $SO_4$ particles that reach the 1000 °C reactor core vaporize and react with a reducing agent to produce $SO_2$. The converted sample is then filtered by a membrane filter and exits through the rear panel of the converter module. The membrane filter removes particles that are sometimes generated inside the converter core and that might otherwise contaminate the analyzer optics, but it does not have any impact on the $SO_2$ concentration.

The converted sample is drawn into the analyzer module through the SAMPLE bulkhead, as shown in **Figure 1–1**. The sample flows into the fluorescence chamber, where pulsating UV light excites the $SO_2$ molecules. As the excited $SO_2$ molecules decay back to lower energy states, they fluoresce, or emit UV light, with an intensity that is proportional to the $SO_2$ concentration. The fluorescence is detected by a photomultiplier tube, or PMT, that is positioned such that it will not be exposed to the excitation energy emitted by the flash lamp. A bandpass filter placed between the fluorescence chamber and the PMT improves selectivity by allowing only the wavelengths emitted by excited $SO_2$ molecules to reach the PMT.

The $SO_2$ concentration is ultimately calculated by comparing the fluorescence signal to the signals generated by calibration gases containing known concentrations of $SO_2$, and the sulfate concentration is calculated by assuming a 1:1 molar conversion from $SO_4$ to $SO_2$.

In order to improve analyzer stability and improve self-diagnostic capabilities, the optical bench also incorporates a photodetector, that is located at the back of the fluorescence chamber. This detector continuously monitors the pulsating UV light source and is connected to a circuit that adjust the lamp voltage to compensate for fluctuations in the UV light that could occur due to aging of the lamp.

After passing through the fluorescence bench the sample is routed through a flow sensor, a capillary, and the sample pump before being exhausted out the back of the analyzer.

# Specifications

**Table 1–1.** Model 5020*i* Specifications

| | |
|---|---|
| Preset analog output ranges | 0-5, 10, 25, 50, and 100 µg/$m^3$ |
| Custom analog output ranges | 0-2 to 4000 µg/$m^3$ sulfate<br>0-2 to 1000 ppb $SO_2$ |
| Zero noise (system) | 0.20 µg/$m^3$ sulfate (15 minute cycle) |
| Limit of detection (system) | 0.50 µg/$m^3$ sulfate (15 minute cycle) |
| Zero drift (system) | Negligible in cycle mode ( zero resets on each cycle) |
| Zero drift (analyzer) | < 1 ppb $SO_2$ per 24 hours |
| Span drift | ± 1% per 24 hours |
| Linearity | ± 1% of full-scale (tested with $SO_2$) |
| Sample flow rate | 0.4 to 0.5 lpm |
| Filtered background flow rate | 0.7 to 0.8 lpm |
| Interferences (EPA levels) | NO rejection > 125<br>Others interferences negligible |
| Operating temperature | 20–30 °C |
| Power requirements | 115 VAC @ 50/60 Hz<br>Analyzer: 165 watts; Converter: 700 watts |
| Physical dimensions | 16.75″ (W) X 8.62″ (H) X 23″ (D) |
| Weight | Analyzer: 44 pounds; Converter 36 pounds |
| Analog outputs | 6 voltage outputs; 0–100 mV, 1, 5, 10 V (user selectable), 5% of full-scale over/under range (user selectable), 12 bit resolution, measurement output user selectable per channel |
| Digital outputs | 1 power fail relay Form C, 10 digital relays Form A, user selectable alarm output, relay logic, 100 mA @ 200 VDC |
| Digital inputs | 16 digital inputs, user select programmable, TTL level, pulled high |
| Serial Ports | 1 RS-232 or RS-485 with two connectors, baud rate 1200–115200, data bits, parity, and stop bits, protocols: C-Link, MODBUS, Geysitech (Bayern-Hessen), and streaming data (all user selectable) |
| Ethernet connection | RJ45 connector for 10 Mbs Ethernet connection, static or dynamic TCP/IP addressing, up to 3 simultaneous connections per protocol |

# Chapter 2
# Installation

Installation of the Model 5020*i* includes lifting the instrument, unpacking and inspection, connecting sample, zero, span, and exhaust lines, and attaching the analog outputs to a recording device. The installation should always be followed by a leak test as described in the "Preventive Maintenance" chapter and an instrument calibration as described in the "Calibration" chapter of this manual.

This chapter provides the following recommendations and procedures for installing the instrument:


- "Lifting" on page 2-1
- "Unpacking and Inspection" on page 2-1
- "Setup Procedure" on page 2-5
- "Connecting External Devices" on page 2-12
- "Startup" on page 2-16


## Lifting

When lifting the instrument, use a procedure appropriate to lifting a heavy object, such as, bending at the knees while keeping your back straight and upright. Grasp the instrument at the bottom in the front and at the rear of the unit. Although one person can lift the unit, it is desirable to have two persons lifting, one by grasping the bottom in the front and the other by grasping the bottom in the rear.

**Equipment Damage** Do not attempt to lift the instrument by the cover or other external fittings. ▲

## Unpacking and Inspection

The Model 5020*i* is shipped in two containers. One box contains the analyzer, a power cord, an instruction manual, warranty card, and iPort software package. The second box contains the converter module and another smaller box that contains two quartz converter cores, two denuders, connectors and tubing to attach to the sample inlet, an electrical umbilical cord that will connect the converter to the analyzer, a power

cord, a 25-foot thermocouple probe, a blue HEPA filter,and other accessories. If a size selective sampling system was also ordered, that will be shipped separately.

If there is obvious damage to the shipping container when you receive the instrument, notify the carrier immediately and hold for inspection. The carrier is responsible for any damage incurred during shipment.

Use the following procedure to unpack and inspect the instrument.

1. Remove the analyzer and converter from the shipping containers and set them on a table or bench that allows easy access to both the front and rear.

2. Remove the instrument covers to expose the internal components.

3. Remove the packing material (**Figure 2–1**).

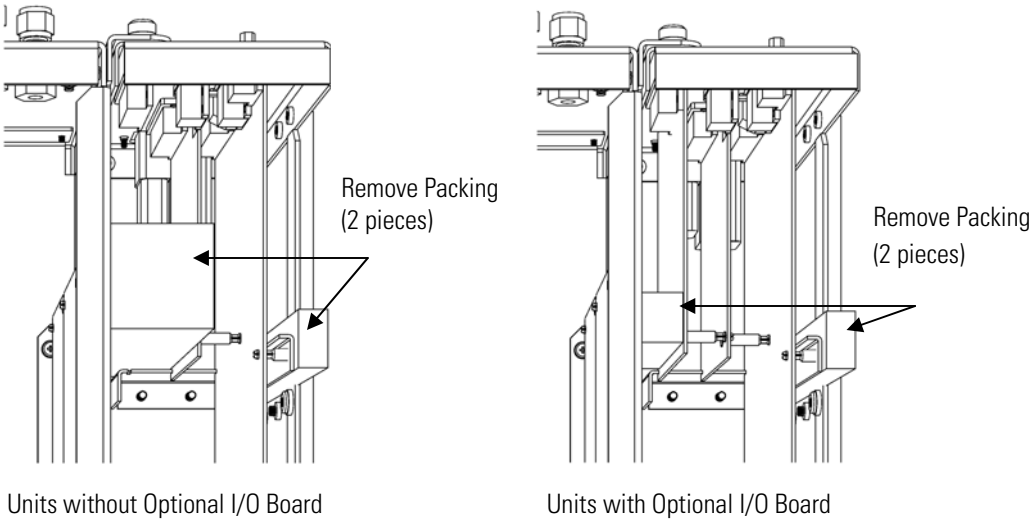


**Figure 2–1.** Remove the Packing Material

4. Check for possible damage during shipment.

5. Remove the three shipping screws from each of the two pumps (**Figure 2–2**).

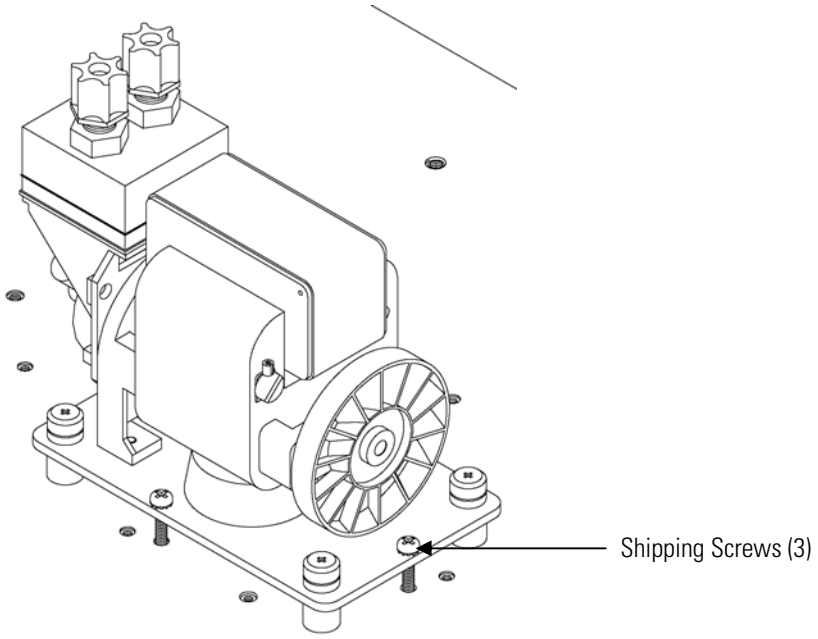


**Figure 2–2.** Removing the Shipping Screws

6. Check that all connectors and circuit boards are firmly attached.

7. Re-install the cover on the analyzer module.

8. Unpack the quartz converter cores and inspect for cracks or other damage (**Figure 2–3**).

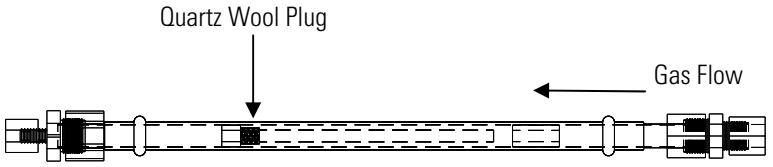


**Figure 2–3.** Inspecting the Converter Core

9. Remove the top half of the converter heater by removing the four cover retaining nuts ((**Figure 2–4**)).

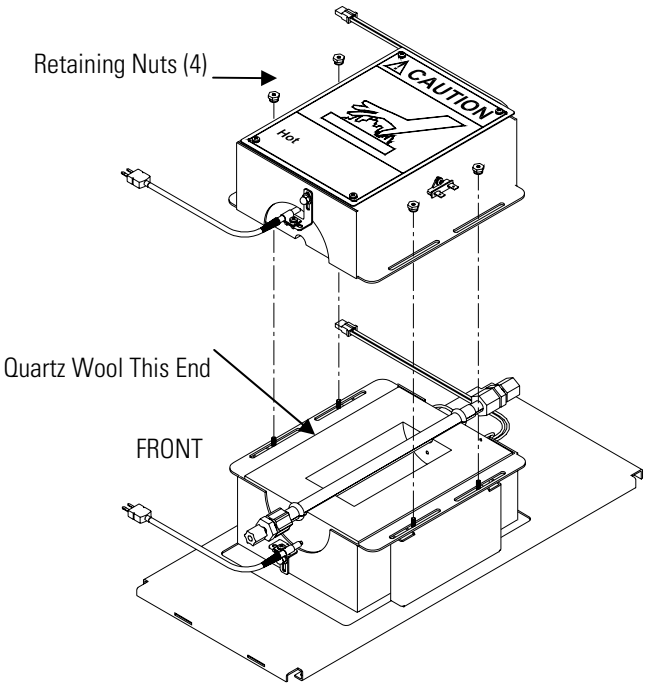


**Figure 2–4.** Quartz Converter Core Installation

10. Place the quartz converter core in the lower half of the heater and attach to the sample lines using the Teflon® fittings (**Figure 2–4**). Be sure that the Teflon fittings are tight enough to prevent leaking and that the quartz tube is installed such that the end with the quartz wool plug is oriented toward the downstream end of the converter heater (the end closer to the front panel).

Gas must be delivered to the instrument free of particulates. It may be necessary to use the Teflon particulate filter as described in "**Error! Reference source not found.**" on page **Error! Bookmark not defined.**.

**Notes** Some tubes do not have a quartz wool plug. ▲

The rear panel bulkhead fitting is adjustable to improve alignment of the quartz tube with the heater jacket. To reduce the risk of breakage, it may be helpful to loosen the screws holding the bulkhead retainer before installing the quartz tube. ▲

11. Carefully reinstall the top half of the converter heater.

12. Check that the thermocouple probes are fully inserted in the heater.

13. Reinstall the cover on the converter module.

14. Remove any protective plastic material from the case exterior.

## Setup Procedure

The Model 5020*i* must be installed in a temperature-controlled shelter and protected from the weather. The two modules should be located as close together as possible, and the tubing that runs between the converter and analyzer should be kept as short as possible to minimize the response time of the instrument.

In most installations, it will be easier if the converter and analyzer modules are mounted side by side. This configuration allows easier access for any maintenance or troubleshooting that might be required. The converter module cover will be very hot during operation; so if the two modules are installed in a vertical rack type configuration, be sure to allow sufficient space for airflow above the converter module.

Installation instructions for optional equipment, such as rack mounts or handles, are located in the “Optional Equipment” chapter.

## External Plumbing

Depending on the type of inlet that will be used and other characteristics of the particular site, plumbing may vary from one installation to the next. **Figure 2–5** shows a suggested configuration that should work for most sites. If another configuration is being considered, contact Thermo Fisher Scientific.

Most of the external plumbing can be assembled with ¼-inch OD Teflon lines and standard compression fittings. However, to minimize the risk of sample losses due to static electricity or impaction, the sample line running from outside the shelter to the converter module’s sample inlet should be made from 3/8-inch OD metal tubing. Because this line carries particulates, it should have a minimum of sharp turns or bends. Instrument grade stainless steel is suggested, but other corrosion resistant metal should also be acceptable if the inside surface is smooth and clean.

Note that the annual denuder that is shipped with the analyzer has an outside diameter of ½-inch and must be installed in-line with the 3/8-inch sample line. The required reducing fittings, including reusable plastic ferrules, are included with the instrument.

The denuder may be installed either inside or outside the shelter. Indoor installation sometimes makes routine service easier. However, if the

temperature inside the shelter is expected to be cooled below the dew point of the outside air, it may be preferable to place the denuder outside so that performance of the denuder is not altered by condensation that could form on the inner surfaces.

**Note** Condensation occurring in the metal sample line is also a potential concern in some installations. In those cases, the risk of condensation can be reduced by insulating the line. ▲

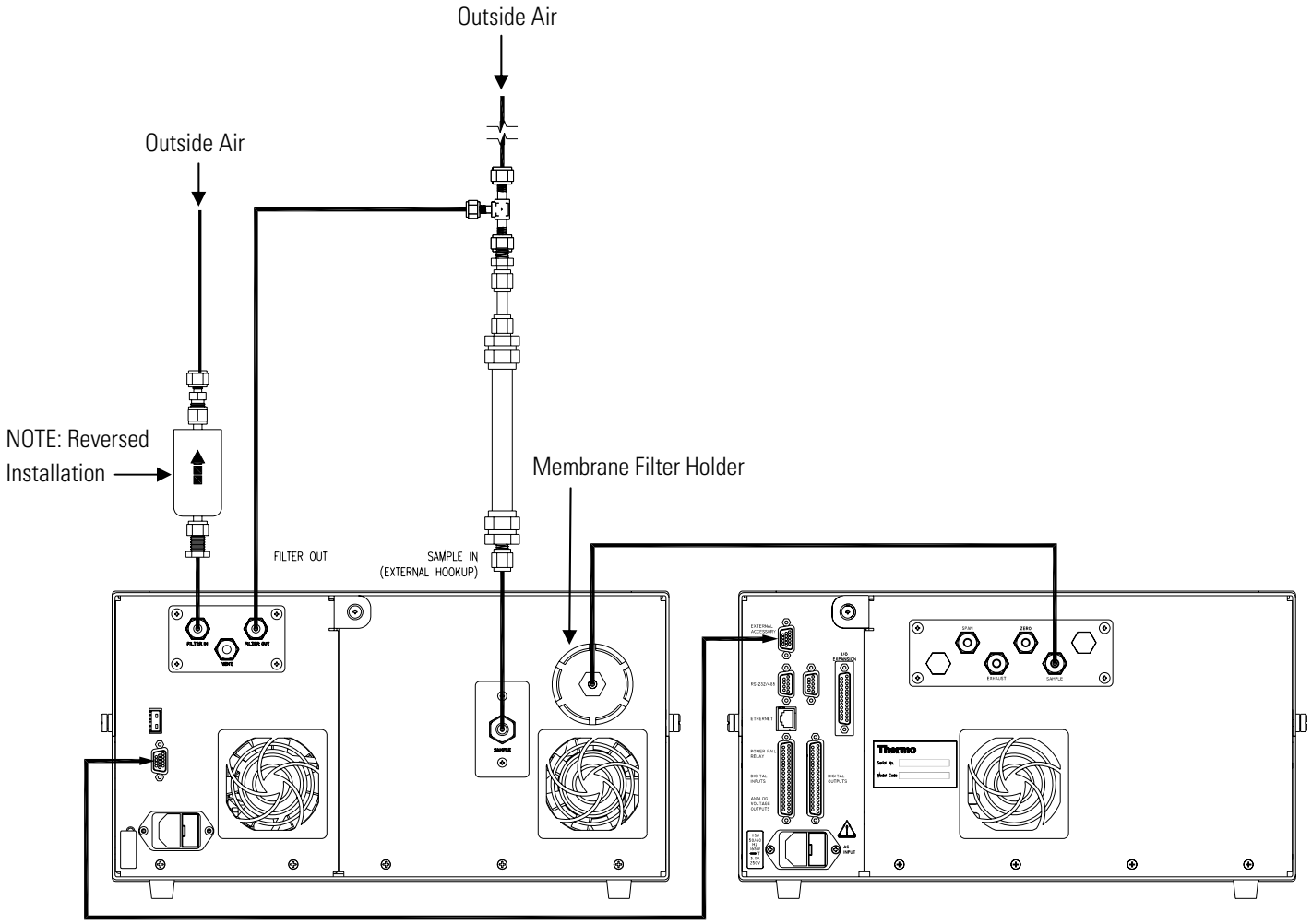


**Figure 2–5.** Recommended Plumbing Configuration

Use the following procedure to make the external plumbing connections. Refer to **Figure 2–5**, **Figure 2–6**, and **Figure 2–7**.

1. **Connecting the Converter to the Inlet System:** Connect the 3/8-inch stainless steel tube from outside the shelter to a Tee fitting, and then connect the Tee fitting to the denuder and the denuder to the rear-panel bulkhead labelled SAMPLE using the compression fittings that are provided.

2. **Connecting the Background / Filter Line:** Connect the second line from outside the shelter to the external HEPA filter located on the bulkhead FILTER IN connection. This line can be made from ¼-inch OD Teflon.

**Note** To increase the life of this filter, connect it so that the arrow faces towards the incoming sample (away from the rear panel). ▲

In some installations, the end of the background line that extends outside the shelter may be tied into the sample line so that both lines draw on a size selective inlet. If the two sample lines are left separate, the background line should be shielded from rain.

3. **Connecting the Converter Module to the Analyzer:** Confirm that a membrane filter is installed in the Teflon filter holder on the rear panel of the converter, and then connect the filter outlet to the SAMPLE bulkhead on the analyzer using 1/4-inch OD Teflon tubing.

4. **Connecting the Calibration Gases:** Accurate sulfate measurement requires that the analyzer module be zeroed and spanned on a routine basis. Detailed calibration instructions are provided in the "Calibration" chapter. Zero air and span gas lines should be connected to the bulkhead fittings labelled ZERO and SPAN on the rear panel of the analyzer module using 1/4-inch OD Teflon line. Calibration gases must be introduced at atmospheric pressure. If the gases are supplied under pressure, a vent or atmospheric dump (**Figure 2–8**) must be included.

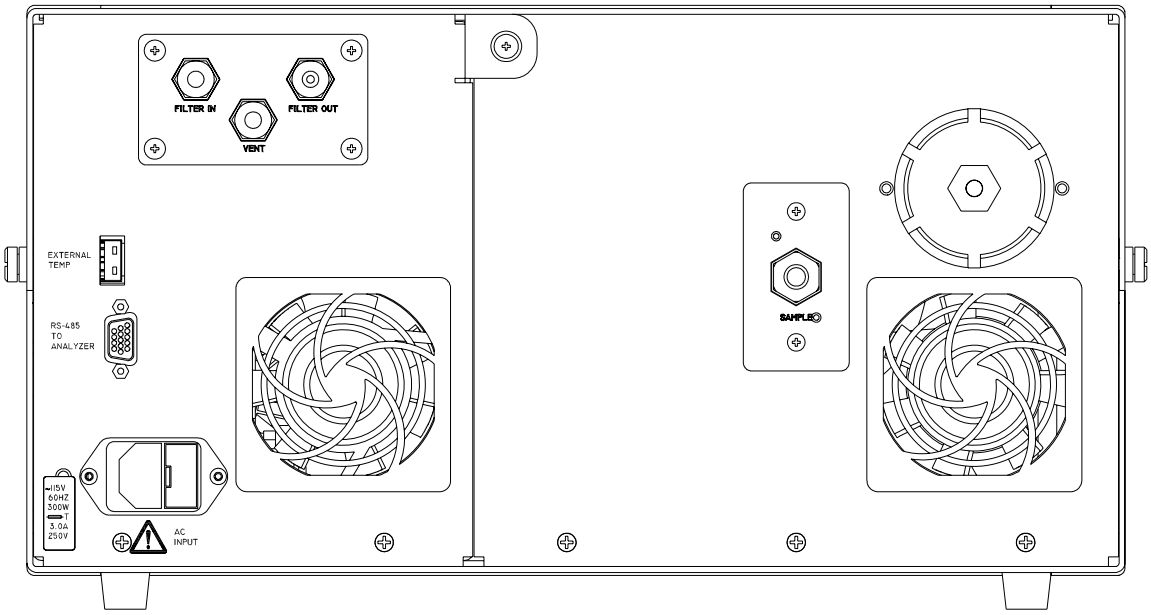


**Figure 2–6.** Converter Rear Panel

5. **Connecting the Analyzer Exhaust Line:** If required by the specific installation, connect the analyzer bulkhead labelled EXHAUST to a suitable vent. For most installations, the EXHAUST bulkheads can be open. If an exhaust line is used, it should be 1/4-inch OD with a minimum ID of 1/8-inch. The length of the exhaust line should be less than 10 feet. Verify that there is no restriction in this line.

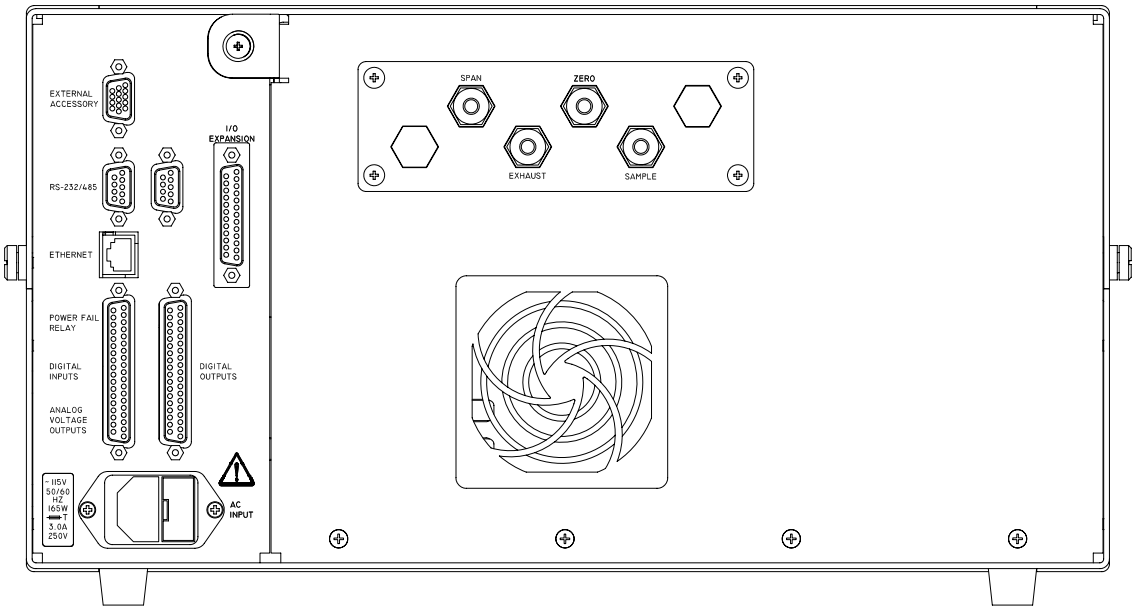


**Figure 2–7.** Analyzer Rear Panel

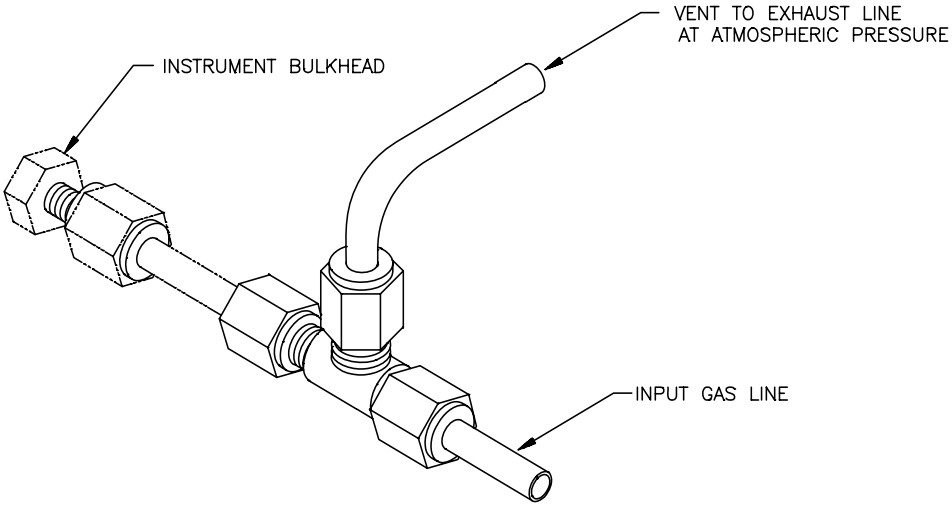


**Figure 2–8.** Atmospheric Pressure Vent for Calibration Gases

## Electrical Connections

Use the following procedure to make the external electrical connections.

**WARNING** The Model 5020*i* is supplied with a three-wire grounding cord. Under no circumstances should this grounding system be defeated. ▲

1. **Connecting the analyzer to the converter:** Connect an RS-485 cable from the EXTERNAL ACCESSORY connector on the analyzer rear panel to the RS-485 connector on the converter rear panel.

2. **Connecting the external temperature sensor:** Plug the thermocouple probe with the 25-foot lead wire into the EXTERNAL TEMP connector on the converter module rear panel. The thermocouple should be placed outside the shelter as close to sample inlet as possible and should be shielded from direct sunlight, wind, and rain. This thermocouple gives the sulfate analyzer the ability to track ambient temperature, which is required for accurate conversion of instrument readings from ppb of sulfur dioxide to µg/m$^3$ of sulfate. If the external thermocouple probe will not be used, the option must be shut off in the instrument software. In that case, the conversion between ppb and µg/m$^3$ will be made using fixed standard values for temperature and pressure (760 torr and 25 °C).

3. **Connecting the Data Recording Device:** Most installations will require connection of a suitable recording device to the rear panel terminals.

   The Model 5020*i* provides versatile I/O and data reporting systems that can be configured to operate with a variety of different data acquisition systems. Depending on the options that were ordered, the instrument may include voltage and current based analog outputs that can be used for recording the concentration of sulfate or sulfur dioxide, the converter temperature, or various other operating parameters. All versions of the Model 5020*i* also include digital data output that can be used to collect a detailed record of sulphate concentration and operating conditions.

   Refer to the “Operation” chapter for configuring I/O and communications. The “Servicing” chapter provides instructions for testing and calibrating analog outputs and calibrating analog inputs. The “System Description” chapter provides detailed information on the I/O components.

   For detailed information about connecting to the instrument, refer to:

"Connecting External Devices" on page 2-12

"Instrument Controls Menu" on page 3-22

"I/O Configuration" on page 3-42

"External Device Connection Components" on page 7-5.

"Terminal Block and Cable Kits" on page 9-9

For detailed information about troubleshooting a connection, refer to "Analog Output Testing" on page 7-22.

4. **Connecting the Main Power:** Verify that the voltage/frequency labels on both rear panels match the local power supply and connect the power using the supplied cords.

## Connecting External Devices

Several components are available for connecting external devices to *i*Series instruments.

These connection options include:

- Individual terminal board PCB assemblies
- Terminal block and cable kits (optional)
- Individual cables (optional)

For detailed information on the optional connection components, refer to the "Optional Equipment" chapter. For associated part numbers, refer to the "Servicing" chapter.

## Terminal Board PCB Assemblies

The following terminal board PCB assemblies are available for *i*Series instruments:

- I/O terminal board PCB assembly, 37 pin (standard)
- D/O terminal board PCB assembly, 37 pin (standard)
- 25-pin terminal board PCB assembly, (included with optional I/O Expansion Board)

### I/O Terminal Board

**Figure 2–9** shows the recommended method for attaching the cable to the terminal board using the included tie-down and spacer. **Table 2–1** identifies the connector pins and associated signals.

**Note** Not all of the I/O available in the instrument are brought out on this terminal board, if more I/O is desired, an alternative means of connection is required. ▲

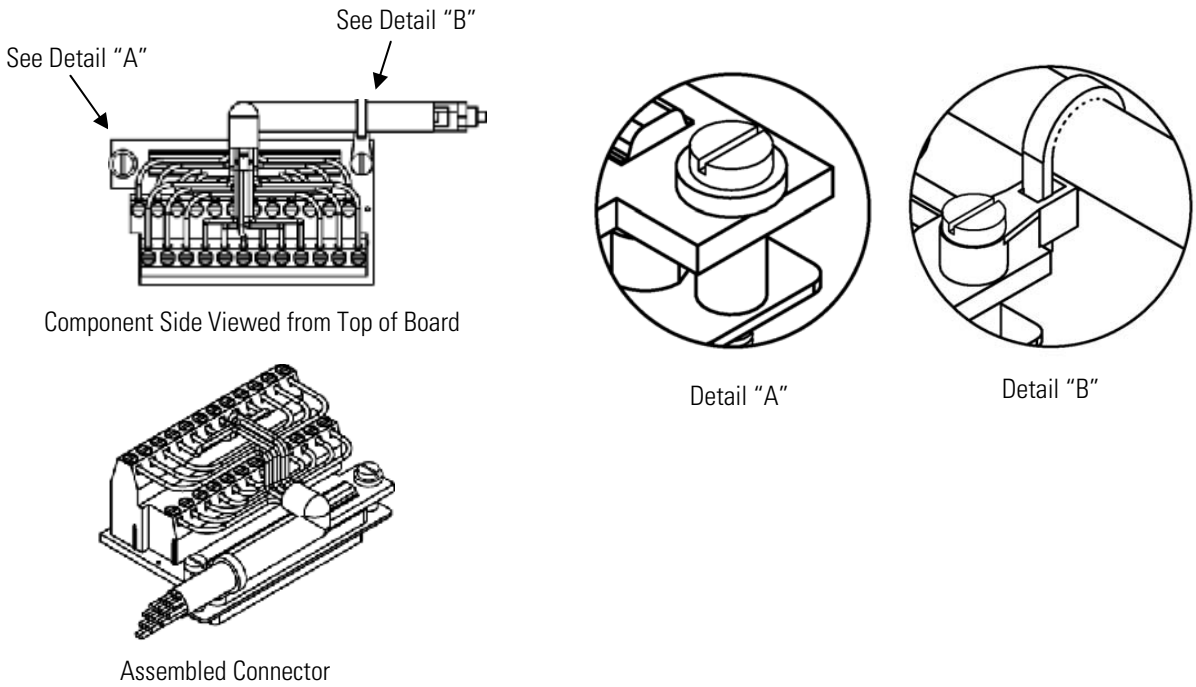


**Figure 2–9.** I/O Terminal Board Views

**Table 2–1.** I/O Terminal Board Pin Descriptions

| Pin | Signal Description | Pin | Signal Description |
|---|---|---|---|
| 1 | Analog1 | 13 | Power_Fail_NC |
| 2 | Analog ground | 14 | Power_Fail_COM |
| 3 | Analog2 | 15 | Power_Fail_NO |
| 4 | Analog ground | 16 | TTL_Input1 |
| 5 | Analog3 | 17 | TTL_Input2 |
| 6 | Analog ground | 18 | TTL_Input3 |
| 7 | Analog4 | 19 | TTL_Input4 |
| 8 | Analog ground | 20 | Digital ground |
| 9 | Analog5 | 21 | TTL_Input5 |

| Pin | Signal Description | Pin | Signal Description |
|---|---|---|---|
| 10 | Analog ground | 22 | TTL_Input6 |
| 11 | Analog6 | 23 | TTL_Input7 |
| 12 | Analog ground | 24 | Digital ground |

## D/O Terminal Board

**Figure 2–10** shows the recommended method for attaching the cable to the terminal board using the included tie-down and spacer. **Table 2–2** identifies the connector pins and associated signals.

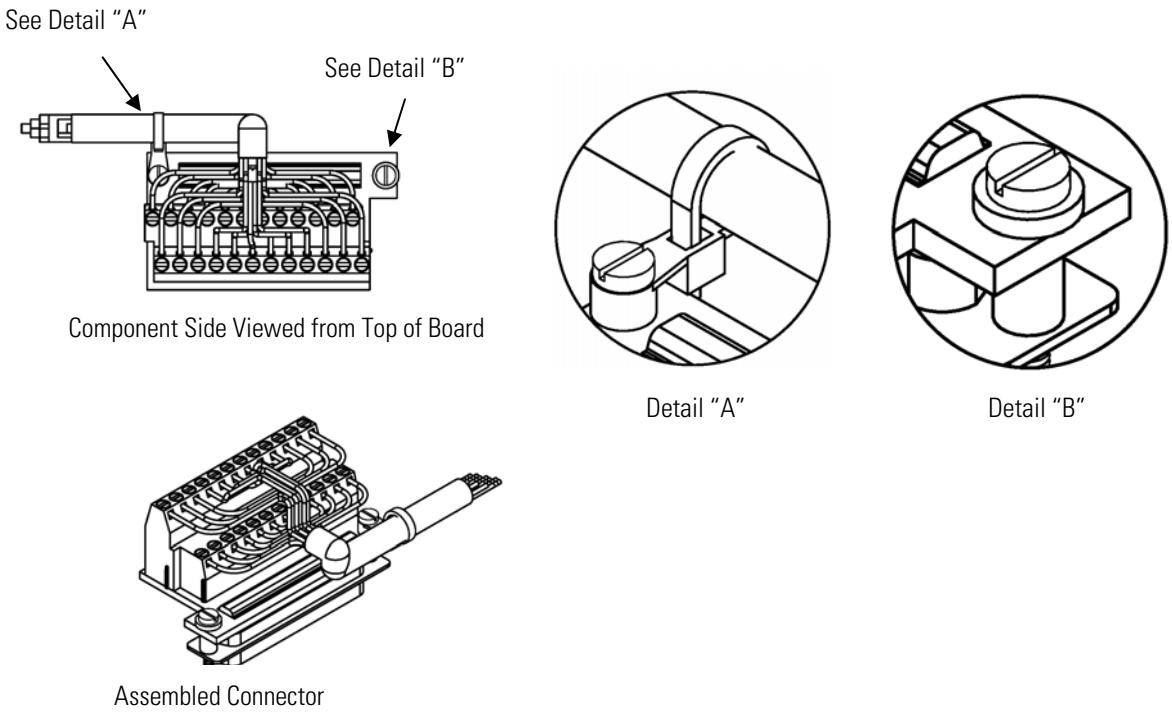


**Figure 2–10.** D/O Terminal Board Views

**Table 2–2.** D/O Terminal Board Pin Descriptions

| Pin | Signal Description | Pin | Signal Description |
|---|---|---|---|
| 1 | Relay1_ContactA | 13 | Relay7_ContactA |
| 2 | Relay1_ContactB | 14 | Relay7_ContactB |
| 3 | Relay2_ContactA | 15 | Relay8_ContactA |
| 4 | Relay2_ContactB | 16 | Relay8_ContactB |
| 5 | Relay3_ContactA | 17 | Relay9_ContactA |

| Pin | Signal Description | Pin | Signal Description |
|---|---|---|---|
| 6 | Relay3_ContactB | 18 | Relay9_ContactB |
| 7 | Relay4_ContactA | 19 | Relay10_ContactA |
| 8 | Relay4_ContactB | 20 | Relay10_ContactB |
| 9 | Relay5_ContactA | 21 | Not Used |
| 10 | Relay5_ContactB | 22 | +24V |
| 11 | Relay6_ContactA | 23 | Not Used |
| 12 | Relay6_ContactB | 24 | +24V |

## 25-Pin Terminal Board

The 25-pin terminal board is included with the optional I/O Expansion Board.

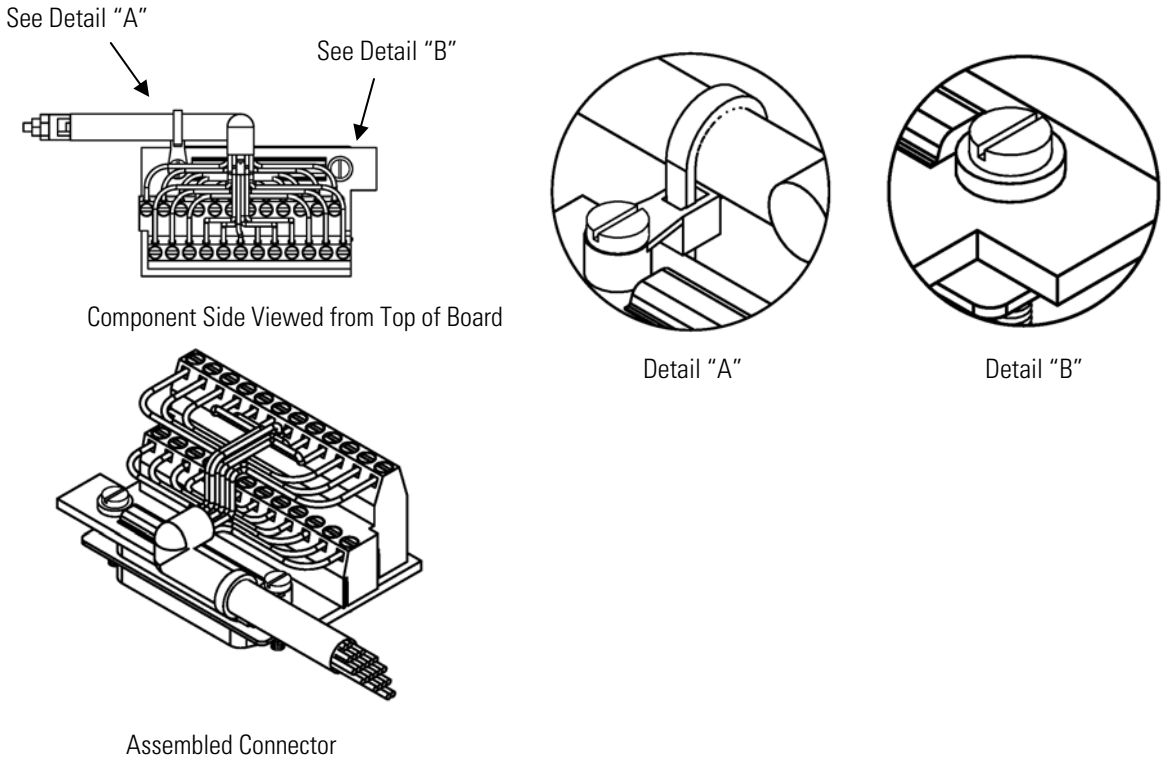


**Figure 2–11.** 25-Pin Terminal Board Views

**Table 2–3.** 25-Pin Terminal Board Pin Descriptions

| Pin | Signal Description | Pin | Signal Description |
|---|---|---|---|
| 1 | IOut1 | 13 | Analog_In1 |
| 2 | Isolated ground | 14 | Analog_In2 |
| 3 | IOut2 | 15 | Analog_In3 |
| 4 | Isolated ground | 16 | GNDD |
| 5 | IOut3 | 17 | Analog_In4 |
| 6 | Isolated ground | 18 | Analog_In5 |
| 7 | IOut4 | 19 | Analog_In6 |
| 8 | Isolated ground | 20 | GNDD |
| 9 | IOut5 | 21 | Analog_In7 |
| 10 | Isolated ground | 22 | Analog_In8 |
| 11 | IOut6 | 23 | GNDD |
| 12 | Isolated ground | 24 | GNDD |

## Startup

Once the basic installation steps listed above have been completed, the instrument power can be turned on to start warm-up and initial burn-in. Although the instrument has been run at the factory, an initial burn-in period of at least 12 hours will be required before full converter efficiency and reliable data collection can be achieved.

1. Turn the analyzer power switch ON and then switch on the converter power.

2. Watch the analyzer front panel display for any fault messages.

3. Allow 60 minutes for the converter to reach the set point temperature and for the analyzer bench to stabilize.

4. At the Main Menu, press [↓] to bring the cursor to Alarms menu selection and press [↵] to view any possible alarms. If there are active alarms, refer to **Table 6–5.** Troubleshooting - Alarm Messages on page 6-9 for information on the specific alarm.

5. Once the unit has been through the burn-in and any alarms have been cleared, set or confirm the instrument operating parameters, as described in the “Operation” chapter.

6. Before beginning actual monitoring, run a leak test as described in "System Leak Testing" in the "Preventive Maintenance" chapter and perform an $SO_2$-based analyzer calibration using the procedures described in the "Calibration" chapter.

   Once the unit is calibrated, perform a dynamic zero test as described in "Dynamic Zero Test" in the "Preventive Maintenance" chapter. This test will verify that the zero baseline and noise levels are within specifications.

# Chapter 3
# Operation

This chapter describes the front panel display, front panel pushbuttons, and menu-driven software.


- "Display" on page 3-2
- "Pushbuttons" on page 3-3
- "Software Overview" on page 3-4
- "Range Menu" on page 3-10
- "Measurement Timing Menu" on page 3-12
- "Calibration Factors Menu" on page 3-14
- "Calibration Menu" on page 3-17
- "Instrument Controls Menu" on page 3-22
- "Diagnostics Menu" on page 3-57
- "Alarms Menu" on page 3-65
- "Service Menu" on page 3-77
- "Password" on page 3-97

## Display

The 320 x 240 graphics liquid-crystal display (LCD) shows the sample concentrations, instrument parameters, instrument controls, help, and error messages. Some menus contain more items than can be displayed at one time. For these menus, use ⬆ and ⬇ to move the cursor up and down to each item.

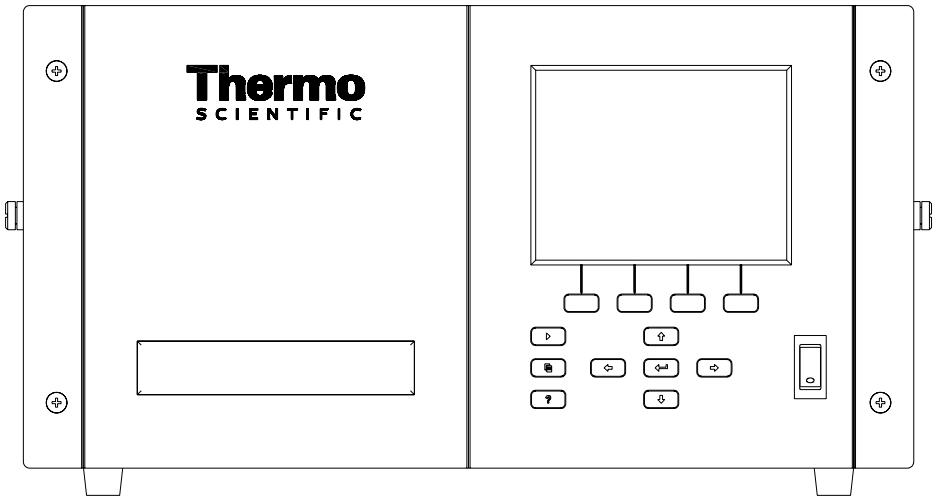


**Figure 3–1.** Front Panel Display

**CAUTION** If the LCD panel breaks, do not to let the liquid crystal contact your skin or clothes. If the liquid crystal contacts your skin or clothes, wash it off immediately using soap and water. ▲

# Pushbuttons

The Pushbuttons allow the user to traverse the various screens/menus. **Table 3–1** lists the front panel pushbuttons and their functions.

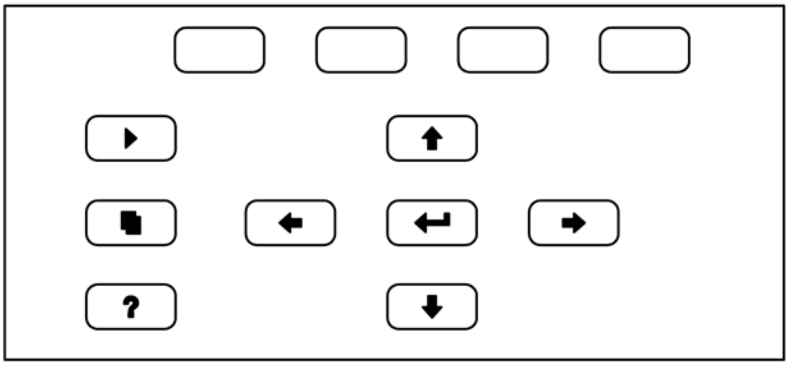

**Figure 3–2.** Front Panel Pushbuttons

**Table 3–1.** Front Panel Pushbuttons

| Key Name | Function |
|---|---|
| = Soft Keys | The (soft keys) are used to provide shortcuts that allow the user to jump to user-selectable menu screens. For more information on processing soft keys, see "Soft Keys". |
| = Run | The is used to display the Run screen. Depending on the operating mode, the Run screen normally displays the $SO_2$ and $SO_4$ concentrations. |
| = Menu | The is used to display the Main Menu when in the Run screen, or back up one level in the menu system. For more information about the Main Menu, see "Main Menu" later in this chapter. |
| = Help | The is context-sensitive, that is, it provides additional information about the screen that is being displayed. Press for a brief explanation about the current screen or menu. Help messages are displayed using lower case letters to easily distinguish them from the operating screens. To exit a help screen, press or to return to the previous screen, or to return to the Run screen. |
| = Up, Down<br>= Left, Right | The four arrow pushbuttons ( , , , and ) move the cursor up, down, left, and right or change values and states in specific screens. |
| = Enter | The is used to select a menu item, accept/set/save a change, and/or toggle on/off functions. |

## Soft Keys

The Soft Keys are multi-functional keys that use part of the display to identify their function at any moment. The function of the soft keys allows immediate access to the menu structure and most often used menus and screens. They are located directly underneath the display and as the keys' functions change this is indicated by user-defined labels in the lower part of the display, so that the user knows what the keys are to be used for.

To change a soft key, place the menu cursor “>” on the item of the selected menu or screen you wish to set. Press [➡] followed by the selected soft key within 1 second of pressing the right-arrow key. The edit soft key prompt will be displayed for configuration for the new label.

**Note** Not all menu items may be assigned to soft keys. If a particular menu or screen item cannot be assigned, the key assignment screen will not come up upon entering right-arrow-soft key combinations. All items under the Service menu (including the menu itself) cannot be assigned soft keys. ▲

## Software Overview

The Model 5020*i* utilizes the menu-driven software as illustrated by the flowchart in **Figure 3–3**. The Power-Up screen, shown at the top of the flowchart, is displayed each time the instrument is turned on. This screen is displayed while the instrument is warming up and performing self-checks. After the warm-up period, the Run screen is automatically displayed. The Run screen is the normal operating screen. It displays the $SO_4$ concentration, depending on operating mode. From the Run screen, the Main Menu can be displayed by pressing [■]. The Main Menu contains a list of submenus. Each submenu contains related instrument settings. This chapter describes each submenu and screen in detail. Refer to the appropriate sections for more information.

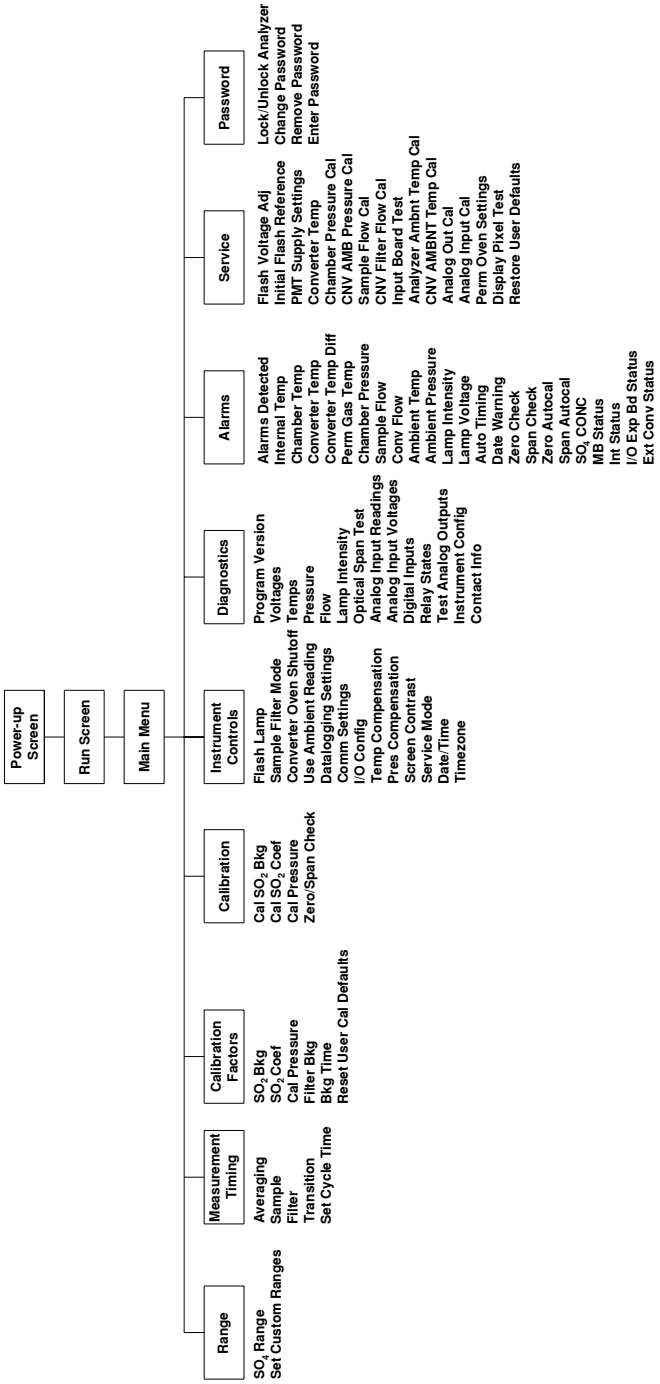


**Figure 3–3.** Flowchart of Menu-Driven Software

## Power-Up Screen

The Power-Up screen is displayed on power up of the Model 5020*i*. The Self-Test is displayed while the internal components are warming up and diagnostic checks are performed.

## Run Screen Automatic Cycling

The appearance of the Run screen depends on whether the instrument is set for automatic cycling or manual operation, and on whether the instrument is currently measuring actual sample or filtered background air. The most common version of the Run screen, which is seen during automatic cycling, is described here, and the Run screen seen in Manual Mode is described below.

The Run screen appears when the instrument is configured for automatic cycling between sample mode and background or filter mode. It displays the current measurement mode, the real-time $SO_2$ reading and the $SO_4$ concentration based on the most recently completed measurement cycle.

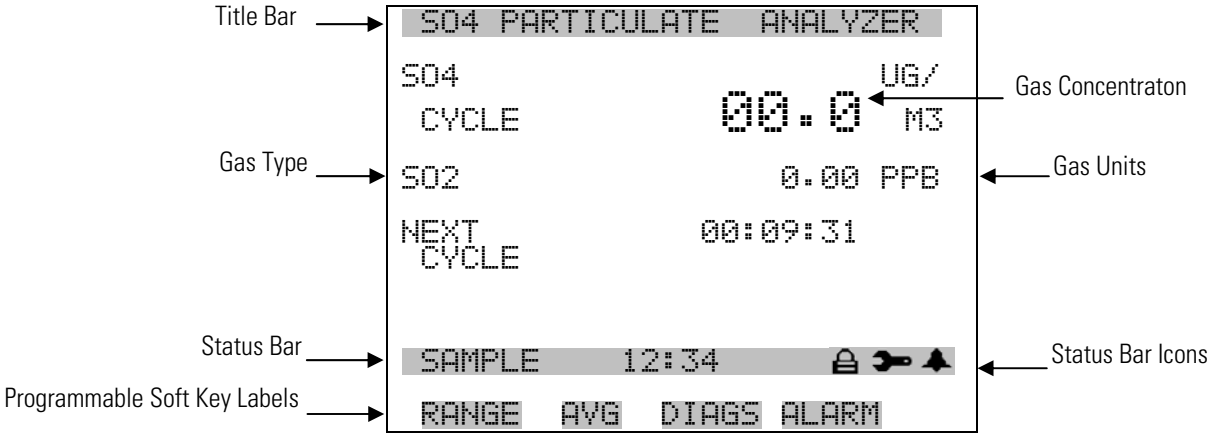

In the Automatic Cycling Run Screen, the status bar shows the current operating mode as either sample or filter, and a count-down timer that indicates the time to the next transition (h:mm:ss). An alarm (bell) icon will appear on the status bar to indicate if any operating alarms are active, a service (wrench) icon will appear to indicate the instrument is in the Service mode, and a password (lock) icon will appear to indicate the instrument is password protected.

**Note** Time is always displayed in 24-hour format. ▲

**Status Bar Icons**

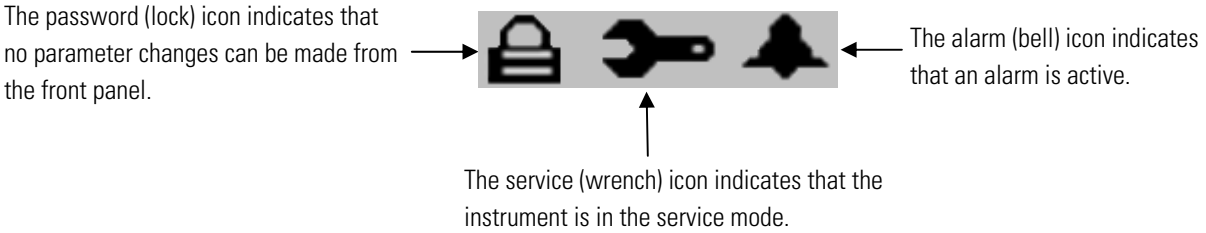


Note that if the analyzer is in Automatic Switching Mode, and the timing values (Averaging Time, Transition Time, Sample Time, and Filter Time) are not set properly in relation to each other, a “TIMING ERROR” or “TIME!” notice will show on this screen on the “Next Cycle” line. Measurement still occurs if this notice is displayed, but the results may not be correct due to timing inconsistencies. For more information about the relationship between the various time settings, see the sections of this manual that describe the individual operating parameters.

The cycle-based $SO_4$ concentration is updated at the end of each filter period and is calculated as the average reading during the most recent sample period minus the average of the readings taken during the filter periods that bracket that sample period. The “batch” $SO_4$ concentration shown on this screen is expressed in units of micrograms sulfate per cubic meter of air.

In addition to showing the most recent cycle-based $SO_4$ measurement, this Run screen also shows the real-time detector signal expressed as parts per billion of $SO_2$. This real-time portion of the display is updated every 10 seconds if the averaging time is 10 seconds or greater, or every second if the averaging time is set to less than 10 seconds. It should also be noted that while the real-time signal represents the actual signal from the detector, it has been corrected for the analyzer zero.

Conversion of the detector signal, expressed as ppb of $SO_2$, to µg/m$^3$ of sulfate is accomplished by first subtracting detector readings taken during filter mode from detector readings taken during sample mode. Converter efficiency is assumed to be 100% and the conversion from $SO_4$ to $SO_2$ is assumed to occur in a 1:1 molar ratio. This background-adjusted reading is converted from ppb to µg/m$^3$ using the following equation:

*SO4 ug/m$^3$:*

$$ug/m3 = \left( \frac{pressure_{ambient} * (ppb - filter\ background\ \ ppb) * SO4_MOLE_WT}{(temperature_{ambient} + 273.15) * 62.36} \right)$$

Ambient pressure is measured by a pressure sensor located in the converter module. Ambient temperature is measured by the external ambient temperature thermocouple probe with a 25-foot lead that plugs into the back panel of the converter module. The probe itself is optimally located outside the shelter near the sample inlet. If for some reason ambient pressure and temperature measurements are not available, turn OFF "Use Ambient Readings" in the Instrument Controls menu. In that case, standard values of 760 torr and 25 °C are used in the calculation.

## Run Screen Manual Operating Mode

The second version of the Run screen, shown below, appears when the instrument is in Manual Operation mode. That is, when automatic switching between the filtered and unfiltered sample streams is disabled. In this mode, the Run screen shows the real-time detector reading expressed as the $SO_2$ concentration and as the $SO_4$ concentration.

As described above, the real-time $SO_2$ reading is the "raw" signal from the detector with a zero correction applied. The zero correction is set at the time of calibration and is based on the detector signal measured when the analyzer module is sampling ultra-high purity zero air.

In the manual operating mode, the real-time $SO_4$ concentration is calculated by subtracting the reading from the most recent measurement of filtered sample from the current real-time $SO_4$ concentration.

In the Manual Operation mode, the RUN pushbutton cycles the analyzer between sample and filter modes.

```
SO4 PARTICULATE ANALYZER
SO2              0.00 PPB
SO4                   UG/
DIRECT           0.00  M3

SAMPLE     10:07
 RANGE  AVG  DIAGS ALARM
```

## Main Menu

The Main Menu contains a number of submenus. Instrument parameters and features are divided into these submenus according to their function. The concentration appears above the main menu and submenus in every screen. The Service menu is visible only when the instrument is in service mode. For more information on the service mode, see “Service Mode” later in this chapter.

- Use [↑] and [↓] to move the cursor up and down.
- Press [↵] to select a choice.
- Press [■] to return to the top of the Main Menu or [▶] to return to the Run screen.

```
MAIN MENU:
>RANGE
 MEASUREMENT TIMING
 CALIBRATION FACTORS
 CALIBRATION
 INSTRUMENT CONTROLS
 DIAGNOSTICS
 ALARMS                ↓

 RANGE  AVG   DIAGS ALARM
 SERVICE
 PASSWORD
```

# Range Menu

The Range menu allows the operator to select a predefined $SO_4$ range and to create a set of three custom ranges.

In the Main Menu, choose **Range**.

```
RANGE:
>SO4 RANGE            75.00
 SET CUSTOM RANGES


 RANGE  AVG  DIAGS ALARM
```

Refer to the rear panel connector shown in **Figure 3–4**. See **Table 3–2** for the default channels and pin connections.

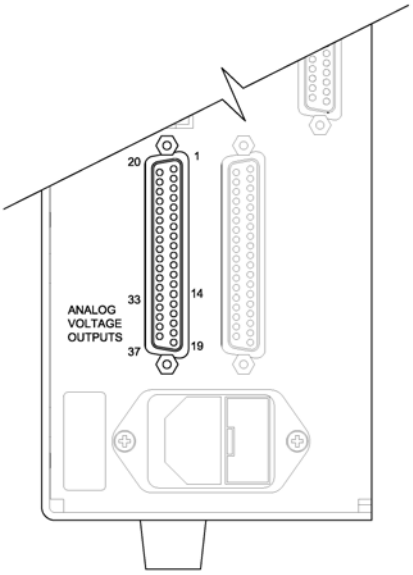


**Figure 3–4.** Pinout of Rear Panel Connector

**Table 3–2.** Default Analog Outputs

| Channel | Connector Pin | I/O Terminal Pin | Description |
|---|---|---|---|
| 1 | 14 | 1 | Continuous $SO_2$ |
| 2 | 33 | 3 | Continuous $SO_4$ |
| 3 | 15 | 5 | Batch $SO_4$ |
| 4 | 34 | 7 | Converter temp (top) |
| 5 | 17 | 9 | Sample flow |

| Channel | Connector Pin | I/O Terminal Pin | Description |
|---|---|---|---|
| 6 | 36 | 11 | Chamber pressure |
| Ground | 16, 18, 19, 35, 37 | 2, 4, 6, 8, 10, 12 | Signal Ground |

**Note** All channels are user definable. If any customization has been made to the analog output configuration, the default selections my not apply. ▲

## $SO_4$ Range

The $SO_4$ Range screen defines the concentration range of the analog outputs. For example, a $SO_4$ range of 0–10 µg/m$^3$restricts the analog output to concentrations between 0 and 0 µg/m$^3$.

The display shows the current $SO_4$ range. The next line of the display is used to change the range. The instrument provides standard ranges of 0-10 µg/m$^3$ and 0-75 µg/m$^3$. C1, C2, and C3 are custom ranges. For more information about custom ranges, see "Set Custom Ranges" that follows.

In the Main Menu, choose Range > **$SO_4$ Range**.

```
SO4 RANGE:
 CURRENTLY:          75.00
    SET TO:          10.00 ?

          ↑↓ CHANGE VALUE
           ↵ SAVE VALUE

 RANGE  AVG   DIAGS ALARM
```

## Set Custom Ranges

The Set Custom Ranges menu lists three custom ranges: C1, C2, and C3. Custom ranges are user-defined ranges. Any value between 10 µg/m$^3$ and 75 µg/m$^3$ can be specified as a range.

In the Main Menu, choose Range > **Set Custom Ranges**.

```
CUSTOM RANGES:
>CUSTOM RANGE 1      15.0
 CUSTOM RANGE 2      25.0
 CUSTOM RANGE 3      50.0



 RANGE  AVG   DIAGS ALARM
```

### Custom Ranges

The Custom Ranges screen is used to define the custom ranges.

The display shows the current custom range. The next line of the display is used to set the range. To use the custom full-scale range, be sure to select it (Custom range 1, 2, or 3) in the $SO_4$ Range screen. For more information about selecting ranges, see "$SO_4$ Range" above.

In the Main Menu, choose Range > Set Custom Ranges > **Custom range 1**, **2**, or **3**.

```
CUSTOM RANGE 1:
 CURRENTLY:          55.5
    SET TO:      000055.  ?

          ↔ MOVE CURSOR
 ↑↓ CHANGE VALUE    ↵ SAVE

 RANGE  AVG   DIAGS ALARM
```

## Measurement Timing Menu

The Measurement Timing menu is used to configure the various timing parameters used for analysis.

In the Main Menu, choose **Measurement Timing**.

```
MEASUREMENT TIMING MENU:
 AVERAGING (SEC)      10
 SAMPLE (MIN)         10
 FILTER (MIN)         10
 TRANSITION (SEC)     90
 SET CYCLE TIME


 RANGE  AVG   DIAGS ALARM
```

### Averaging

The Averaging parameter defines a period (1 to 120 seconds) over which $SO_4$ measurements are averaged. All concentration readings are averaged over that period. An averaging time of 10 seconds, for example, means that the average concentration of the last 10 seconds will be output at each system update. An averaging time of 120 seconds means that the moving average concentration of the last 120 seconds will be output at each update. The lower the averaging time, the faster the instrument responds to concentration changes. Longer averaging times are typically used to smooth output data. The factory default averaging time is set to 10 seconds.

It is important to understand that the Averaging parameter only affects the real-time instrument readings. Increasing the averaging time has no impact on the limit of detection for cycle-based $SO_4$ measurement results. However, a long averaging time will cause a delay in stabilization when the instrument shifts between filter mode and sample mode. To minimize risk of measurement errors, the averaging time should be set to less than half the transition time when the instrument is running in the automatic, or cycle-based, measurement mode.

Note that the front panel display and analog outputs are updated every 10 seconds for averaging times between 10 and 120 seconds. For averaging times of 1, 2, and 5 seconds, the front panel display and analog outputs are updated every second.

In the Main Menu, choose Measurement Timing > **Averaging (Sec)**.

```
AVERAGING TIME:
 CURRENTLY:        60 SEC
    SET TO:        90 SEC

          ↑↓ CHANGE VALUE
           ↵ SAVE VALUE

 RANGE  AVG   DIAGS ALARM
```

## Sample/Filter

The Sample and Filter times together define the length of the measurement cycle in automatic mode. The sample time can be set to any value between 1 and 600 minutes, while the filter time can be set to any value between 1 and 240 minutes. The sample and filter times must both be longer than the transition time for valid automatic operation. The factory default sample and filter times are both set to 10 minutes.

In the Main Menu, choose Measurement Timing > **Sample (Min)** or **Filter (Min)**.

```
SAMPLE TIME:
 CURRENTLY:        010 MIN
    SET TO:        010 MIN

          ←→ MOVE CURSOR
 ↑↓ CHANGE VALUE   ↵ SAVE

 RANGE  AVG  DIAGS  ALARM
```

```
FILTER TIME:
 CURRENTLY:        010 MIN
    SET TO:        010 MIN

          ←→ MOVE CURSOR
 ↑↓ CHANGE VALUE   ↵ SAVE

 RANGE  AVG  DIAGS  ALARM
```

## Transition Time

The Transition Time is the amount of data at the start of each period that will not be included in the in the calculations of the cycle-based SO4 concentration in automatic mode. It is used to account for response time effects on the measurements. The Transition Time can be set to any value between 2 and 999 seconds. The Transition Time must be at least twice the averaging time and less than the sample and filter times for valid automatic operation. The factory default Transition Time is set to 90 seconds.

In the Main Menu, choose Measurement Timing > **Transition (Sec)**.

```
TRANSITION TIME:
 CURRENTLY:        090 SEC
    SET TO:        090 SEC

          ↔ MOVE CURSOR
 ↑↓ CHANGE VALUE   ↵ SAVE

 RANGE  AVG  DIAGS  ALARM
```

## Set Cycle Time

In auto mode, the Set Cycle Time screen is used to set the date and time for the first change from filter to sample or vice versa. This menu item allows the operator to control report generation and coordinate instrument operation with current time.

In the Main Menu, choose Measurement Timing > **Set Cycle Time**.

```
NEXT DATE AND TIME:
 25 JAN 2006  00:00
 PRESS ↵ TO EDIT



 RANGE  AVG  DIAGS  ALARM
```

# Calibration Factors Menu

Calibration factors are mathematical parameters that are experimentally determined during calibration, and are then used by the system software to convert a raw signal from the detector to a concentration reading. Because the relationship between detector response and $SO_2$ concentration is inherently linear, the Model 5020*i* only utilizes two calibration factors. These are the instrument zero, which corresponds to the *y*-intercept in the concentration-response curve, and the span factor, which corresponds to the slope of the curve.

The Calibration Factors menu displays the calibration factors and allows for manual adjustment. Normally the calibration factors are adjusted automatically by the instrument processor during the calibration routine. However, the instrument can be manually calibrated using commands in this menu.

In the Main Menu, choose **Calibration Factors**.

```
CALIBRATION FACTORS:
>SO2 BKG                0.00
 SO2 COEF              1.000
 FILTER BKG (PPB)       0.00
 BKG TIME    21JUN06 13:50
 RESET CAL USER DEFAULTS


 RANGE  AVG  DIAGS ALARM
```

## $SO_2$ Background

The $SO_2$ Background correction is determined during zero calibration. The $SO_2$ background is the amount of signal read by the analyzer while sampling zero air. Although the background is expressed in terms of concentration, the background signal is actually the combination of electrical noise and scattered light. Before the analyzer sets the $SO_2$ reading to zero, it stores this value as the $SO_2$ background correction.

The $SO_2$ Background screen is used to perform a manual adjustment of the instruments zero background. As such, the instrument should sample zero air until stable readings are obtained. The display shows the current $SO_2$ reading. This reading is the $SO_2$ background signal. The next line of the display shows the $SO_2$ background correction that is stored in memory and is being used to correct the $SO_2$ reading. That is, the $SO_2$ background correction is subtracted from the $SO_2$ reading.

If the valve is opened during automatic cycling, the automatic cycling will be paused during the calibration and resume with a full filter period after the calibration. Cycle-based data may not be collected if a calibration is begun at certain times in the sample/filter sequence.

In the example that follows, the analyzer is reading 1.49 ppb of $SO_2$ while sampling zero air. The $SO_2$ background correction is 0.0 ppb. That is, the analyzer is not applying a zero background correction. The question mark is used as a prompt to change the background correction. In this case the background correction must be increased to 1.49 ppb in order for the $SO_2$ reading to be at 0 ppb.

To set the $SO_2$ reading in the example that follows to zero, use [↑] to increment the $SO_2$ background correction to 1.49 ppb. As the $SO_2$ background correction is increased, the $SO_2$ concentration is decreased. At

this point, however, no real changes have been made. To escape this screen without saving any changes, press [■] to return to the Calibration Factors menu or [▶] to return to the Run screen. Press [↵] to actually set the $SO_2$ reading to 0 ppb and store the new background correction of 1.49 ppb.

In the Main Menu, choose Calibration Factors > **$SO_2$ Bkg**.

```
SO2 BACKGROUND:
        SO2:          1.49
 SET BKG TO:           0.0 ?
            ➡ OPEN VALVE
            ⬆⬇ INC/DEC
             ↵ SAVE VALUE

 RANGE   AVG    DIAGS ALARM
```

## $SO_2$ Span Coefficient

The $SO_2$ span coefficient is usually calculated by the instrument processor during calibration. The span coefficients are used to correct the $SO_2$ readings and normally has a value near 1.000.

The $SO_2$ Coefficient screen allows the $SO_2$ span coefficient to be manually changed while sampling span gas of known concentration.

If the valve is opened during automatic cycling, the automatic cycling will be paused during the calibration and resume with a full filter period after the calibration. Cycle-based data may not be collected if a calibration is begun at certain times in the sample/filter sequence.

The display shows the current $SO_2$ concentration reading. The next line of the display shows the $SO_2$ span coefficient that is stored in memory and is being used to correct the $SO_2$ concentration. Notice that as the span coefficient value is changed, the current $SO_2$ concentration reading on the above line also changes. However, no real changes are made to the value stored in memory until [↵] is pressed. Only proposed changes, as indicated by a question mark prompt, are displayed until [↵] is pressed.

In the Main Menu, choose Calibration Factors > **$SO_2$ Coef**.

```
SO2 COEFFICIENT:
        SO2:        TOO LOW
 SET COEF TO:         1.000
            ➡ OPEN VALVE
            ⬆⬇ INC/DEC
             ↵ SAVE VALUE

 RANGE   AVG    DIAGS ALARM
```

## Filter Background

The Filter Background menu item displays the current filter background $SO_2$ value in ppb. This is the value used to calculate the continuous $SO_4$ measurement.

## Background Time

The Background Time menu item displays the time of the most recent filter background measurement.

## Reset User Calibration Defaults

The Reset User Calibration Default screen allows the user to reset the calibration configuration values to factory defaults.

In the Main Menu, choose Calibration Factors > **Reset User Cal Defaults**.

```
RESTORE DEFAULT CAL:
                  ↵ RESTORE


 RANGE  AVG  DIAGS ALARM
```

```
RESTORE DEFAULT CAL:
                  ↵ RESTORE
ARE YOU SURE YOU WANT TO?
PRESS ➡ TO CONFIRM RESTORE

 RANGE  AVG  DIAGS ALARM
```

# Calibration Menu

The Calibration menu is used to calibrate the instrument span. For more information about calibration, see the “Calibration” chapter.

In the Main Menu, choose **Calibration**.

```
CALIBRATION:
>CAL SO2 BACKGROUND
 CAL SO2 COEFFICIENT
 CALIBRATE PRESSURE
 ZERO/SPAN CHECK



 RANGE  AVG   DIAGS ALARM
```

## Calibrate $SO_2$ Background

The Calibrate $SO_2$ Background screen is used to adjust the $SO_2$ background, or perform a "zero calibration". Before performing a zero calibration, ensure the analyzer samples zero air for at least 5 minutes.

If the valve is opened during automatic cycling, the automatic cycling will be paused during the calibration and resume with a full filter period after the calibration. Cycle-based data may not be collected if a calibration is begun at certain times in the sample/filter sequence.

It is important to note the averaging time when calibrating. The longer the averaging time, the more precise the calibration will be. To be most precise, use the 300-second averaging time. For more information about calibration, see the "Calibration" chapter.

In the Main Menu, choose Calibration > **Cal $SO_2$ Background**.

```
SO2 BACKGROUND:
        SO2:          0.00
 CURRENTLY:           0.00 ?
            ➡ OPEN VALVE
          ↵ SET SO2 TO ZERO

 RANGE   AVG   DIAGS ALARM
```

## Calibrate $SO_2$ Coefficient

The Calibrate $SO_2$ Coefficient screen is used to adjust the $SO_2$ coefficient and enter the span concentration.

The $SO_2$ span coefficient is calculated, stored, and used to correct the current $SO_2$ reading. For more information about calibration, see the "Calibration" chapter.

If this screen is entered during automatic cycling, the automatic cycling will be paused during the calibration and resume with a full filter period after the calibration. Cycle-based data may not be collected if a calibration is begun at certain times in the sample/filter sequence.

In the Main Menu, choose Calibration > **Cal $SO_2$ Coefficient**.

```
CALIBRATE SO2:
        SO2:          0.00
 SPAN CONC:      00008.03 ?

            ➡ OPEN VALVE

 RANGE   AVG   DIAGS ALARM
```

## Calibrate Pressure

The Calibrate Pressure screen is used to automatically adjust the pressure used for calibration of the analyzer.

```
CALIBRATE PRESSURE:
CUR CAL PRES: 760.0 mmHg
CURRENT PRES: 761.0 mmHg ?

    SAVE CURRENT PRESSURE
    AS CAL PRESSURE

 RANGE  AVG   DIAGS ALARM
```

In the Main Menu, choose Calibration > **Calibrate Pressure**.

## Zero/Span Check Menu

The Zero/Span Check menu is used to program the instrument to perform fully automated zero and span check or adjustments. Total Duration Hr is the sum of zero, span, and purge duration minutes.

If an automatic zero or span action occurs during automated cycling, the automatic cycling will be paused during the calibration and resume with a full filter period after the calibration. Cycle-based data may not be collected if a calibration is begun at certain times in the sample/filter sequence.

In the Main Menu, choose Calibration > **Zero/Span Check**.

```
ZERO/SPAN CHECK:
>NEXT TIME 01JAN06 12:00
 PERIOD HR                6
 TOTAL DURATION HR      1.1
 ZERO DURATION MIN       30
 SPAN DURATION MIN       30
 PURGE DURATION MIN       5
 ZERO/SPAN AVG SEC       60
 ZERO CAL RESET         OFF↓

 RANGE  AVG   DIAGS ALARM
 SPAN CAL RESET         OFF
 ZERO/SPAN RATIO          1
```

### Next Time

The Next Time screen is used to set the initial date and time of the zero/span check. Once the initial zero/span check is performed, the date and of the next zero/span check is calculated and displayed.

In the Main Menu, choose Calibration > Zero/Span Check > **Next Time**.

```
NEXT DATE AND TIME:
 19 MAR 2005  12:34
 PRESS ↵ TO EDIT


 RANGE  AVG  DIAGS ALARM
```

```
NEXT DATE AND TIME:
 19 MAR 2005  12:34:56
 SETTING: DAYS
            ➡ SET MONTHS
          ⬆⬇ CHANGE VALUE
            ↵ SAVE VALUE
 RANGE  AVG  DIAGS ALARM
```

## Period Hours

The Zero/Span Period Hours screen defines the period or interval between zero/span checks. Periods between 0 and 999 hours are acceptable. To turn the zero/span check off, set the period to 0.

In the Main Menu, choose Calibration > Zero/Span Check > **Period Hours**.

```
ZERO/SPAN PERIOD:
 CURRENTLY:      024 HRS
    SET TO:      024 HRS ?

          ⬅➡ MOVE CURSOR
 ⬆⬇ CHANGE VALUE   ↵ SAVE

 RANGE  AVG  DIAGS ALARM
```

## Zero/Span/Purge Duration Minutes

The Zero Duration Minutes screen defines how long zero air is sampled by the instrument. The span and purge duration screens look and functions the same way as the zero duration screen, and are used to set how long the span gas and sample gas are sampled by the instrument. Durations between 0 and 60 minutes are acceptable. Each time a zero/span check occurs the zero check is done first, followed by the span check. To perform just a zero check, set the span and purge duration screens to 0 (off). The same applies to perform just a span or purge check.

In the Main Menu, choose Calibration > Zero/Span Check > **Zero, Span** or **Purge Duration Min**.

```
ZERO DURATION:
 CURRENTLY:        30 MIN
    SET TO:        31 MIN ?

          ↔ MOVE CURSOR
 ↑↓ CHANGE VALUE   ↵ SAVE

 RANGE  AVG  DIAGS ALARM
```

## Zero/Span Averaging Time

The Zero/Span Averaging Time screen allows the user to adjust the zero/span averaging time. The zero/span averaging time is used by the analyzer only when performing an automatic zero, or span check, or calibration. The analyzer's averaging time is used for all other functions. The following averaging times are available: 1, 2, 5, 10, 20, 30, 60, 90, 120, 180, 240, and 300 seconds.

In the Main Menu, choose Calibration > Zero/Span Check > **Zero/Span Avg Sec**.

```
ZERO/SPAN AVERAGING TIME:
 CURRENTLY:        60 SEC
    SET TO:        90 SEC ?

          ↑↓ CHANGE VALUE
           ↵ SAVE VALUE

 RANGE  AVG   DIAGS ALARM
```

## Zero/Span Ratio

The Zero/Span Ratio screen is used to adjust the ratio of zeros to spans. For example, if this value is set to 1, a span check will follow every zero check. If this value is set to 3, there will be two zero checks between each zero/span check. This value may be set from 1 to 10, with 1 as default.

In the Main Menu, choose Calibration > Zero/Span Check > **Zero/Span Ratio**.

```
ZERO/SPAN RATIO:
 CURRENTLY:          1:1
    SET TO:          3:1 ?

          ↑↓ CHANGE VALUE
           ↵ SAVE VALUE

 RANGE  AVG   DIAGS ALARM
```

## Instrument Controls Menu

The Instrument Controls menu contains a number of items. The software controls listed in this menu enable control of the listed instrument functions.

In the Main Menu, choose **Instrument Controls**.

```
INSTRUMENT CONTROLS:
>FLASH LAMP
 SAMPLE/FILTER MODE
 CONVERTER OVEN SHUTOFF
 USE AMBIENT READINGS
 DATALOGGING SETTINGS
 COMMUNICATION SETTINGS
 I/O CONFIGURATION          ↓

 RANGE  AVG   DIAGS ALARM
```

```
TEMPERATURE COMPENSATION
PRESSURE COMPENSATION
SCREEN CONTRAST
SERVICE MODE
DATE/TIME
TIMEZONE
```

## Flash Lamp

The Flash Lamp screen is used to turn the flash lamp on or off. The flash lamp must be off when using the optical span test LED. For more information about the optical span test LED, see “Optical Span Test” later in this chapter.

In the Main Menu, choose Instrument Controls > **Flash Lamp**.

```
FLASH LAMP:
 CURRENTLY:            ON
    SET TO:           OFF ?

           ↵ TOGGLE VALUE

 RANGE  AVG   DIAGS ALARM
```

## Sample/Filter Mode

The Sample/Filter Mode screen allows the user to turn the auto or manual switching between sample and filter modes. When set to AUTO, the instrument will operate in the cycle-based mode and switch between the filtered and unfiltered sample streams on an automatic basis. The timing of the switching is controlled by parameters listed under the Measurement Timing menu discussed earlier in this chapter. If this parameter is set to

MANUAL, the unit will run in the continuous mode and will not automatically switch sample streams

For normal operation, this parameter will be set to AUTO so that switching between the filtered and unfiltered air streams occurs on a set interval and the final sulfate concentration is calculated based on filter readings that were taken both before and after the actual sample reading. Bracketing the sample reading with filtered background measurements helps compensate for rapid changes in the concentration of NO and results in better accuracy and precision when measuring low concentrations of ambient sulfate.

If an unusual application requires real-time or continuous data, the instrument can be run in Manual mode. If NO concentrations are low and stable, relative to sulfate, there will be minimal degradation of data quality. In continuous mode, the frequency and duration of background measurements are minimized and the real-time sulfate concentration is reported based on the difference between the current detector signal and the signal recorded during the most recent filter cycle. Continuous measurement should be avoided in conditions where the NO concentration is high relative to the sulfate, where the NO is fluctuating rapidly, or when the filtered background and unfiltered sample air produce a signal of similar magnitude.

Although the choice of operating mode and the frequency of background measurements will depend largely on the specific application, Thermo Fisher Scientific suggests that most ambient monitoring should be done with the instrument set in the automatic cycling mode. In most cases, the filter and sample duration should be set at between five and ten minutes and the transition time should be 90 to 120 seconds. Using these settings, the 5020*i* will update the sulfate measurement every ten to twenty minutes.

In the Main Menu, choose Instrument Controls > **Sample/Filter Mode**.

```
SAMPLE/FILTER MODE:
 CURRENTLY:            AUTO
    SET TO:            AUTO

            ↑↓ CHANGE VALUE
             ↵ SAVE VALUE

 RANGE  AVG   DIAGS ALARM
```

## Converter Oven Shutoff

The Converter Oven screen allows the user to turn the converter oven ON or OFF. The default state is ON, and the state set by the user will always revert to ON at power up.

In the Main Menu, choose Instrument Controls > **Converter Oven Shutoff**.

```
CONVERTER OVEN:
 CURRENTLY:        ENABLED
    SET TO:       DISABLED ?

          ↵ TOGGLE VALUE

 RANGE   AVG    DIAGS ALARM
```

## Use Ambient Readings

If for some reason ambient pressure and temperature measurements are not available, turn OFF "Use Ambient Readings" in the Instrument Controls menu.

In the Main Menu, choose Instrument Controls > **Use Ambient Readings**.

```
USE AMBIENT READINGS:
 CURRENTLY:            OFF
    SET TO:             ON ?

          ↵ TOGGLE VALUE

 RANGE   AVG    DIAGS ALARM
```

## Datalogging Settings

The *i*Series instruments include a built-in data logging capability as a standard feature. The operator is allowed to create two different types of records, which for historical reasons are named lrecs and srecs. Each record can contain up to 32 different fields or data items, and records can be created at user-defined intervals ranging from 1 to 60 minutes.

Record generation is tied to the instrument's real-time clock. For example, if the logging period for srecs is set to 30 minutes, a new srec will be generated on every hour and every half hour (10:00, 10:30, 11:00 …). Lrecs and srecs can be interleaved. For example, an srec containing just the current concentration level could be generated every five minutes while an lrec containing a full set of diagnostic data could be generated once every hour.

The analyzer's computer system includes three megabytes of flash memory which is enough to store a full lrec containing 32 data items and a full srec containing 32 items once each minute for a week (>20,000 total records). If logging is limited to the minimum content of date, time, concentration and error flags, the analyzer can store data once each minute for four months (>190,000 records).

In the Main Menu, choose Instrument Controls > **Datalogging Settings**.

```
DATALOGGING:
>SELECT SREC/LREC     SREC
 VIEW LOGGED DATA
 ERASE LOG
 SELECT CONTENT
 COMMIT CONTENT
 RESET TO DEFAULT CONTENT
 CONFIGURE DATALOGGING

 RANGE  AVG   DIAGS ALARM
```

## Select SREC/LREC

The analyzer allows you to create two different records, designated as an LREC and an SREC. The Select SREC/LREC is used to select short record or long record format for other operations in this menu.

In the Main Menu, choose Instrument Controls > Datalogging Settings > **Select SREC/LREC**.

```
SEL LOG TYPE:
 CURRENTLY:       SREC
    SET TO:       LREC

        ↵ TOGGLE VALUE

 RANGE  AVG   DIAGS ALARM
```

## View Logged Data

The View Logged Data screen is used to select the start point to view the logged data by number or records or date and time.

In the Main Menu, choose Instrument Controls > Datalogging Settings > **View Logged Data**.

```
SELECT START POINT BY:
    SET TO: # OF RECS

  ↑↓ CHANGE     ↵ ACCEPT
 RANGE  AVG  DIAGS ALARM
```

## Number of Records

The Number of Records screen is used to select the starting record to display the number of records back to view.

```
SET # BACK FROM CURRENT:
                  0000003
TOTAL LRECS:           20

          ⬅➡ MOVE CURSOR
 ⬆⬇ CHANGE VALUE   ↵ SAVE

 RANGE  AVG  DIAGS ALARM
```

The Record Display screen (read only) displays the selected records.

```
time     date    flags
 10:01 06/20/05 FC0088900
 10:02 06/20/05 FC0088900
 10:03 06/20/05 FC0088900
 10:04 06/20/05 FC0088900
  ⬆⬇ PGUP/DN  ⬅➡ PAN L/R

 RANGE  AVG  DIAGS ALARM
```

## Date and Time

The Date and Time screen is used to set a start date and time for which to view logged data. For example, if “20 JUN 2005 10:00” is entered, then the first logged data record that is displayed is the first record after this time. If set to one minute logging, this would be at “20 JUN 2005 10:01”.

```
DATE AND TIME:
 20 JUN 2005  10:00
 ⬆⬇ CHG   DAYS
 ➡ SET CURSOR TO MONTHS
 ↵ ACCEPT AS SHOWN

 RANGE  AVG  DIAGS ALARM
```

The Record Display screen (read only) displays the selected records.

```
time    date    flags
 10:01 06/20/05 FC0088900
 10:02 06/20/05 FC0088900
 10:03 06/20/05 FC0088900
 10:04 06/20/05 FC0088900
  ⬆⬇ PGUP/DN   ⬅➡ PAN L/R

 RANGE  AVG  DIAGS ALARM
```

**Erase Log**

The Erase Log is used to erase all saved data for the selected record type (not all short records and long records).

In the Main Menu, choose Instrument Controls > Datalogging Settings > **Erase Log**.

```
ERASE LREC LOG FILE DATA?
                ↵ ERASE

 RANGE  AVG  DIAGS ALARM
```

```
ERASE LREC LOG FILE DATA?
                ↵ ERASE
ARE YOU SURE YOU WANT TO?
PRESS ➡ TO CONFIRM ERASURE

 RANGE  AVG  DIAGS ALARM
```

**Select Content**

The Select Content submenu displays a list of 32 record fields to use and a submenu list of the analog output signal group choices to choose from. Choices are Concentrations, Other Measurements, and Analog Inputs (if the I/O expansion board is installed). This is a temporary list of items for the selected record type that must be committed via the datalogging menu before the changes will apply. Note that committing any changes to this list will erase all currently logged data, as the format of the stored data is changed.

In the Main Menu, choose Instrument Controls > Datalogging Settings > **Select Content**.

```
LREC FIELDS:
>FIELD 1              SO2
 FIELD 2             SO4C
 FIELD 3             SO4B
 FIELD 4           F0AVG
 FIELD 5           F0PTS
 FIELD 6           F1AVG
 FIELD 7           F1PTS ↓

 RANGE  AVG  DIAGS ALARM
```

## Choose Item Type

The Choose Item Type submenu is a list of the type of data that can be logged for the current field. Choices are Concentrations, Other Measurements, and Analog Inputs (if the I/O expansion board is installed).

In the Main Menu, choose Instrument Controls > Datalogging Settings > Select Content > **Field 1-32**.

```
DATA IN SREC FIELD  1:
 CONCENTRATIONS
 OTHER MEASUREMENTS
 ANALOG INPUTS

 RANGE  AVG   DIAGS ALARM
```

**Note** The ANALOG INPUTS item is only displayed if the I/O Expansion Board option is installed. ▲

## Concentrations

The Concentrations screen allows the user to select the output signal that is tied to the selected field item. The selected item is shown by "<--" after it. Note that at this point, pressing [↵] indicates that these are proposed changes as opposed to implemented changes. To change the selected record format and erase record log file data, see "Commit Content" that follows.

In the Main Menu, choose Instrument Controls > Datalogging Settings > Select Content > Select Field > **Concentrations**.

```
CONCENTRATIONS:
>NONE
 SO2                    <--
 CONT SO2
 CONT SO4
 BATCH SO4
 F0 AVERAGE
 F0 STD DEV
 F0 POINTS                ↓

 RANGE  AVG   DIAGS ALARM
 F1 AVERAGE
 FI STD DEV
 F1 POINTS
 SMP AVERAGE
 SMP STD DEV
 SMP POINTS
 FILTER BKG
```

## Other Measurements

The Other Measurements screen allows the user to select the output signal that is tied to the selected field item. The selected item is shown by "<--" after it. Items displayed are determined by the options installed. Note that at this point, pressing [↵] indicates that these are proposed changes as opposed to implemented changes. To change the selected record format and erase record log file data, see "Commit Content" that follows.

In the Main Menu, choose Instrument Controls > Datalogging Settings > Select Content > Select Field > **Other Measurements**.

```
OTHER MEASUREMENTS:
>NONE
 INT TEMP          <--
 CHAMBER TEMP
 CNV TEMP TOP
 CNV TEMP BTM
 PERM OVN GAS
 PERM OVN HTR             ↓

 RANGE  AVG   DIAGS ALARM
 CHAMBER PRES
 SAMPLE FLOW
 PMT VOLTS
 FLASH VOLTS
 FLASH REF
 CONV FLOW
 AMBIENT TEMP
 AMBIENT PRES
```

## Analog Inputs

The Analog Inputs screen allows the user to select the output signal (none or analog inputs 1-8) that is tied to the selected field item. The selected item is shown by "<--" after it. Note that at this point, pressing ↵ indicates that these are proposed changes as opposed to implemented changes. To change the selected record format and erase record log file data, see "Commit Content" that follows.

In the Main Menu, choose Instrument Controls > Datalogging Settings > Select Content > Select Field > **Analog Inputs**.

```
ANALOG INPUTS:
>NONE
 INPUT 1                <--
 INPUT 2
 INPUT 3
 INPUT 4
 INPUT 5
 INPUT 6                  ↓

 RANGE  AVG   DIAGS ALARM
 INPUT 7
 INPUT 8
```

## Commit Content

The Commit Content screen is used to save the selected output signal that is tied to the selected field item. If no changes have been made "NO CHANGES TO RECORD LIST!" will appear. For more information about selecting the analog output signal group choices, see "Commit Content" in this chapter.

In the Main Menu, choose Instrument Controls > Datalogging Settings > **Select Content**.

```
CHANGE LREC DATA AND
ERASE LREC LOG FILE DATA?
              ↵ COMMIT

 RANGE  AVG  DIAGS ALARM
```

```
CHANGE LREC DATA AND
ERASE LREC LOG FILE DATA?
              ↵ COMMIT
ARE YOU SURE YOU WANT TO?
PRESS ➡ TO CONFIRM CHANGES

 RANGE  AVG  DIAGS ALARM
```

## Reset to Default Content

The Reset to Default Content screen is used to reset all of the datalogging field items to default values for the selected record type. For more information about selecting the content of logged data fields, see “Select Content” described previously.

In the Main Menu, choose Instrument Controls > Datalogging Settings > **Reset to Default Content**.

```
RESET LREC DATA AND
ERASE LREC LOG FILE DATA?
                ↵ RESET


 RANGE  AVG  DIAGS ALARM
```

```
RESET LREC DATA AND
ERASE LREC LOG FILE DATA?
                ↵ RESET
ARE YOU SURE YOU WANT TO?
PRESS ➡ TO CONFIRM RESET

 RANGE  AVG  DIAGS ALARM
```

## Configure Datalogging

The Configure Datalogging menu deals with datalogging configuration for the currently selected record type.

In the Main Menu, choose Instrument Controls > Datalogging Settings > **Configure Datalogging**.

```
DATALOGGING SETTINGS:
>LOGGING PERIOD MIN   OFF
 MEMORY ALLOCATION %   50
 DATA TREATMENT       AVG



 RANGE  AVG   DIAGS ALARM
```

## Logging Period Min

The Logging Period Min screen is used to select the logging period in minutes for the record format (srec or lrec). List of choices include: off, 1, 5, 15, 30, and 60 minutes (default).

**Note** This logging period only applies if the instrument is in manual sample/filter mode. If the instrument is in automatic cycling mode, a point is logged at the end of every filter period. ▲

In the Main Menu, choose Instrument Controls > Datalogging Settings > Configure Datalogging > **Logging Period Min**.

```
SET PERIOD FOR SREC:
 CURRENTLY:       OFF MIN
    SET TO:        60 MIN ?

 ⬆⬇ CHANGE VALUE    ↵ SAVE

 RANGE   AVG   DIAGS ALARM
```

## Memory Allocation Percent

The Memory Allocation Percent screen is used to select the percentage of each record type for both srecs and lrecs. Percentages between 0 and 100% are available in increments of 10. Changing this value results in log erasure for both short records and long records.

In the Main Menu, choose Instrument Controls > Datalogging Settings > Configure Datalogging > **Memory Allocation %**.

```
SET PERCENT SRECS:
 CURRENTLY:          50 %
    SET TO:         100 % ?

 ⬆⬇ CHANGE VALUE    ↵ SAVE

 RANGE   AVG   DIAGS ALARM
```

## Data Treatment

The Data Treatment screen is used to select the data type for the selected record type: whether the data should be averaged over the interval, the minimum or maximum measured during the interval, or the current value (last value measured). Data treatment doesn't apply to all data, just to the concentration measurement. All other data points log the current value at the end of the interval.

**Note** This only applied to concentration data collected in manual sample/filter mode. ▲

In the Main Menu, choose Instrument Controls > Datalogging Settings > Configure Datalogging > **Data Treatment**.

```
SET  LREC DATA TYPE:
 CURRENTLY:    AVG
    SET TO:    AVG

 ↑↓ CHANGE VALUE    ↵ SAVE

 RANGE  AVG   DIAGS ALARM
```

## Communication Settings

The communication Settings menu is used with communications control and configuration.

In the Main Menu, choose Instrument Controls > **Communication Settings**.

```
COMMUNICATION SETTINGS:
>SERIAL SETTINGS:
 INSTRUMENT ID
 COMMUNICATION PROTOCOL
 STREAMING DATA CONFIG
 TCP/IP SETTINGS

 RANGE  AVG   DIAGS ALARM
```

### Serial Settings

The Serial Settings screen is used for serial communications control and configuration.

In the Main Menu, choose Instrument Controls > Communication Settings > **Serial Settings**.

```
SERIAL SETTINGS:
>BAUD RATE              9600
 DATA BITS                 8
 PARITY                 NONE
 STOP BITS                 1
 RS-232/485 SEL

 RANGE  AVG   DIAGS ALARM
```

### Baud Rate

The Baud Rate screen is used to set the RS-232/RS485 interface baud rate. Baud rates of 1200, 2400, 4800, 9600, 19200, 38400, 57600 and 115200 are available. The analyzer's default baud rate is set to 9600 to provide backwards compatibility with the older C-series analyzers.

In the Main Menu, choose Instrument Controls > Communication Settings > Serial Settings > **Baud Rate**.

```
BAUD RATE:
 CURRENTLY:          9600
    SET TO:         57600 ?

            ⬆⬇ CHANGE VALUE
            ↵ SAVE VALUE

 RANGE   AVG    DIAGS ALARM
```

**Data Bits**

The Data Bits Screen is used to set the number of serial data bits. Selections of 7 or 8 are available (defaults to 8).

In the Main Menu, choose Instrument Controls > Communication Settings > Serial Settings > **Data Bits**.

```
DATA BITS:
 CURRENTLY:       10
    SET TO:        8 ?

            ⬆⬇ CHANGE VALUE
            ↵ SAVE VALUE

 RANGE   AVG    DIAGS ALARM
```

**Parity**

The Parity screen is used to select the parity bit for the serial port. Selections of NONE, EVEN, or ODD are available (defaults to NONE).

In the Main Menu, choose Instrument Controls > Communication Settings > Serial Settings > **Parity**.

```
PARITY:
 CURRENTLY:       NONE
    SET TO:       NONE

            ⬆⬇ CHANGE VALUE
            ↵ SAVE VALUE

 RANGE   AVG    DIAGS ALARM
```

**Stop Bits**

The Stop Bits screen is used to select the number of stop bits for the serial port. Selections of 1 and 2 are available (defaults to 1).

In the Main Menu, choose Instrument Controls > Communication Settings > Serial Settings > **Stop Bits**.

```
STOP BITS:
 CURRENTLY:        1
    SET TO:        1

            ↑↓ CHANGE VALUE
             ↵ SAVE VALUE

 RANGE  AVG   DIAGS ALARM
```

## RS-232/RS-485 Selection

The RS-232/RS-485 Selection screen allows the user to choose between the RS-232 or RS-485 specification for serial communication.

**Equipment Damage** Disconnect the serial cable before changing RS-232 and RS-485 selection to prevent damage to any equipment currently connected to the instrument. ▲

In the Main Menu, choose Instrument Controls > Communication Settings > Serial Settings > **RS-232/RS-485 Selection**.

```
RS-232/RS-485 SELECTION:
      ** WARNING **
 DISCONNECT THE SERIAL
 CABLES BEFORE CHANGING
      THE SELECTION!
            ↵ TO CONTINUE

RANGE  AVG   DIAGS ALARM
```

```
RS-232/RS-485 SELECTION:
 CURRENTLY:        RS-232
    SET TO:        RS-485 ?
MAKE SURE THAT THE CABLE
IS OFF: PRESS → TO CONFIRM
            ↵ TOGGLE VALUE

 RANGE  AVG   DIAGS ALARM
```

## Instrument ID

The Instrument ID screen allows the operator to edit the instrument ID. The ID is used to identify the instrument when using the C-Link or MODBUS protocols to control the instrument or collect data. It may be necessary to edit the ID number if two or more of the same instruments are connected to one computer. Valid Instrument ID numbers are from 0 to 127. The Model 5020*i* has a default Instrument ID of 135. For more information about the Instrument ID, see Appendix B “C-Link Protocol Commands” or Appendix C “MODBUS Protocol”.

In the Main Menu, choose Instrument Controls > Communication Settings > **Instrument ID**.

```
INSTRUMENT ID:
 CURRENTLY:              43
    SET TO:             135 ?

          ↑↓ CHANGE VALUE
           ↵ SAVE VALUE

 RANGE   AVG    DIAGS ALARM
```

## Communication Protocol

The Communication Protocol screen is used to change the instrument communication protocol for serial communications.

In the Main Menu, choose Instrument Controls > Communication Settings > **Communication Protocol**.

```
COMMUNICATION PROTOCOL:
 CURRENTLY:          CLINK
    SET TO:     STREAMING ?

          ↑↓ CHANGE VALUE
           ↵ SAVE VALUE

 RANGE   AVG    DIAGS ALARM
```

## Streaming Data Configuration

The Streaming Data Configuration menu is used to allow for configuration of the 8 streaming data output items, streaming interval, current data format, and current timestamp setting. The Choose Item Signal submenu displays a list of the analog output signal group choices to choose from. Choices are Concentrations, Other Measurements, and Analog Inputs (if the I/O expansion board option is installed).

**Note** Add Labels, Prepend Timestamp, Add Flags, and 5020SPA Compatible are toggle items that change between YES or NO when selected. ▲

In the Main Menu, choose Instrument Controls > Communication Settings > **Streaming Data Config**.

```
STREAMING DATA CONFIG:
>INTERVAL            10 SEC
 ADD LABELS             NO
 PREPEND TIMESTAMP     YES
 ADD FLAGS             YES
 5020SPA COMPATIBLE    YES
 ITEM 1               S04C
 ITEM 2               S04B
 ITEM 3              F0AVG ↓

 RANGE   AVG    DIAGS ALARM
```

```
ITEM 4          F0PTS
ITEM 5          F1AVG
ITEM 6          F1PTS
ITEM 7           SAVG
ITEM 8           SPTS
```

## Streaming Data Interval

The Streaming Data Interval screen is used to adjust the streaming data interval. The following interval times are available: 1, 2, 5, 10, 20, 30, 60, 90, 120, 180, 240, and 300 seconds.

In the Main Menu, choose Instrument Controls > Communication Settings > Streaming Data Config > **Streaming Data Interval**.

```
STREAMING DATA INTERVAL:
 CURRENTLY:        30 SEC
    SET TO:        10 SEC ?

          ⬆⬇ CHANGE VALUE
           ↵ SAVE VALUE

 RANGE  AVG   DIAGS ALARM
```

## 5020SPA Compatible

When streaming data is set to “5020SPA Compatible” equals YES, the analyzer streams data in the same format as a 5020SPA (5020C) in “short” streaming mode:

**yyyymmdd,hhmmss,nnnnnn,m**

Note that *nnnnnn* is the corrected $SO_2$ and *m* is the sampling state as follows:

Sampling State

0 – sample
1 – filter
2 – span
3 – zero
4 – unknown/error

## Choose Item Signal

The Choose Signal screen displays a submenu list of the analog output signal group choices. Group choices are Concentrations, Other Measurements, and Analog Inputs (if the I/O expansion board is installed).

In the Main Menu, choose Instrument Controls > Communication Settings > Streaming Data Config > **Item 1-8**.

```
CHOOSE STREAM DATA
>CONCENTRATIONS
 OTHER MEASUREMENTS
 ANALOG INPUTS

 RANGE  AVG   DIAGS ALARM
```

## Concentrations

The Concentrations screen allows the user to select the output signal that is tied to the selected streaming data item. The selected item is shown by "<--" after it.

In the Main Menu, choose Instrument Controls > Communication Settings > Streaming Data Config > Select Item > **Concentrations**.

```
CONCENTRATIONS:
>NONE
 CONT SO2
 CONT SO4
 BATCH SO4
 F0 AVERAGE
 F0 STD DEV
 F0 POINTS
 RANGE  AVG   DIAGS ALARM
```

```
F1 AVERAGE
FI STD DEV
F1 POINTS
SMP AVERAGE
SMP STD DEV
SMP POINTS
FILTER BKG
```

## Other Measurements

The Other Measurements screen allows the user to select the output signal that is tied to the selected streaming data item. The selected item is shown by "<--" after it.

In the Main Menu, choose Instrument Controls > Communication Settings > Streaming Data Config > Select Item > **Other Measurements**.

```
OTHER MEASUREMENTS:
>NONE
 INT TEMP          <--
 CHAMBER TEMP
 CNV TEMP TOP
 CNV TEMP BTM
 PERM OVN GAS
 PERM OVN HTR            ↓

 RANGE  AVG   DIAGS ALARM
```

```
 CHAMBER PRES
 SAMPLE FLOW
 PMT VOLTS
 FLASH VOLTS
 FLASH REF
 CONV FLOW
 AMBIENT TEMP
 AMBIENT PRES
```

## Analog Inputs

The Analog Inputs screen allows the user to select the analog input signal (none or analog inputs 1-8) that is tied to the selected streaming data item. The selected item is shown by "<--" after it.

In the Main Menu, choose Instrument Controls > Communication Settings > Streaming Data Config > Select Item > **Analog Inputs**.

```
ANALOG INPUTS:
>NONE
 ANALOG IN 1            <--
 ANALOG IN 2
 ANALOG IN 3
 ANALOG IN 4
 ANALOG IN 5
 ANALOG IN 6              ↓

 RANGE  AVG   DIAGS ALARM
```

```
 ANALOG IN 7
 ANALOG IN 8
```

## RS-232/RS-485 Selection

The RS-232/RS-485 Selection screen allows the user to choose between the RS-232 or RS-485 specification for serial communication.

**Equipment Damage** Disconnect the serial cable before changing RS-232 and RS-485 selection to prevent damage to the connected equipment. ▲

In the Main Menu, choose Instrument Controls > Communication Settings > **RS-232/RS-485 Selection**.

```
RS-232/RS-485 SELECTION:
      ** WARNING **
  DISCONNECT THE SERIAL
  CABLES BEFORE CHANGING
      THE SELECTION!
            ↵ TO CONTINUE

RANGE   AVG   DIAGS ALARM
```

```
RS-232/RS-485 SELECTION:
 CURRENTLY:        RS-232
    SET TO:        RS-485 ?
MAKE SURE THAT THE CABLE
IS OFF: PRESS ➡ TO CONFIRM
            ↵ TOGGLE VALUE

 RANGE   AVG   DIAGS ALARM
```

## TCP/IP Settings

The TCP/IP Settings menu is used for defining TCP/IP settings.

**Note** The instrument power must be cycled after this parameter has been changed for the change to take effect. ▲

In the Main Menu, choose Instrument Controls > Communication Settings > **TCP/IP Settings**.

```
TCP/IP SETTINGS:
>USE DHCP                OFF
 IP ADDRESS   192.168.1.200
 NETMASK      255.255.255.0
 GATEWAY        192.168.1.1
 HOST NAME          iSeries
 NTP SVR            0.0.0.0

 RANGE   AVG   DIAGS ALARM
```

## Use DHCP

The Use DHCP screen is used to specify whether to use DHCP or not. When DHCP is enabled, the network dynamically provides an IP address for the instrument. The instrument's power must be cycled for a change to this parameter to take affect.

In the Main Menu, choose Instrument Controls > Communication Settings > TCP/IP Settings > **Use DCHP**.

```
DHCP:
 CURRENTLY:            OFF
    SET TO:             ON ?

            ↵ TOGGLE VALUE
CYCLE POWER TO CHANGE DHCP

 RANGE   AVG   DIAGS ALARM
```

## IP Address

The IP Address screen is used to edit the IP address. The IP address can only be changed when DHCP is OFF. For more information on DHCP, see “Use DHCP”.

In the Main Menu, choose Instrument Controls > Communication Settings > TCP/IP Settings > **IP Address**.

```
IP ADDRESS:
 CURRENT:  192.168.1.200
  SET TO:  192.168.001.01
           ↔ MOVE CURSOR
           ↕ CHANGE VALUE
            ↵ SAVE

 RANGE   AVG    DIAGS ALARM
```

## Netmask

The Netmask screen is used to edit the netmask. The netmask is used to determine the subnet for which the instrument can directly communicate to other devices on. The netmask can only be changed when DHCP is OFF. For more information on DHCP, see “Use DHCP” in this chapter.

In the Main Menu, choose Instrument Controls > Communication Settings > TCP/IP Settings > **Netmask**.

```
NETMASK:
 CURRENT:  255.255.255.0
  SET TO:  255.255.255.00
           ↔ MOVE CURSOR
           ↕ CHANGE VALUE
            ↵ SAVE

 RANGE   AVG    DIAGS ALARM
```

## Gateway

The Default Gateway screen is used to edit the gateway address. The default gateway can only be changed when DHCP is OFF. For more information on DHCP, see “Use DHCP” in this chapter. Any traffic to addresses that are not on the local subnet will be routed through this address.

In the Main Menu, choose Instrument Controls > Communication Settings > TCP/IP Settings > **Gateway**.

```
GATEWAY:
 CURRENT: 192.168.1.1
  SET TO: 192.168.001.001
          ↔ MOVE CURSOR
          ↕ CHANGE VALUE
           ↵ SAVE

 RANGE   AVG    DIAGS ALARM
```

### Host Name

The host name screen is used to edit the host name. When DHCP is enabled, this name is reported to the DHCP server.

In the Main Menu, choose Instrument Controls > Communication Settings > TCP/IP Settings > **Host Name**.

```
HOST NAME:
  CURRENT: ISERIES
           ISERIES          ?
     ABCDEFGHIJKLMN  BKSP
     OPQRSTUVWXYZ    PAGE
     0123456789 ./-  SAVE

 RANGE   AVG   DIAGS ALARM
```

### Network Time Protocol Server

The Network Time Protocol (NTP) Server screen is used to edit the IP address of the NTP server. More information about the NTP servers and a list of public servers may be found at http://www.ntp.org.

In the Main Menu, choose Instrument Controls > Communication Settings > TCP/IP Settings > **NTP Server**.

```
NTP SERVER IP ADDRESS:
 CURRENT: 192.168.1.200
  SET TO: 192.168.001.013
          ↔ MOVE CURSOR
          ↕ CHANGE VALUE
           ↵ SAVE

 RANGE   AVG    DIAGS ALARM
```

## I/O Configuration

The I/O Configuration menu deals with configuration of the analyzer's I/O system. The analog input configuration is displayed only if the I/O expansion board option is installed.

**Notes** The digital outputs may take up to one second after the assigned state occurs to show up on the outputs. ▲

Analog Input Config is only displayed if the optional I/O Expansion Board is installed. ▲

In the Main Menu, choose Instrument Controls > **I/O Configuration**.

```
I/O CONFIGURATION:
>OUTPUT RELAY SETTINGS
 DIGITAL INPUT SETTINGS
 ANALOG OUTPUT CONFIG
 ANALOG INPUT CONFIG



 RANGE  AVG   DIAGS ALARM
```

## Output Relay Settings

The Output Relay Settings menu displays a list of the 10 digital output relays available, and allows the user to select the instrument parameter or logic state to change for the relay selected.

In the Main Menu, choose Instrument Controls > I/O Configuration > Output Relay Settings > **1-10**.

```
OUTPUT RELAY SETTINGS:
>1    NOP       CONC ALARM
 2    NOP     SO4 CONC MAX
 3    NOP     SO4 CONC MIN
 4    NOP       CHAMB PRES
 5    NOP        CONV TEMP
 6    NOP          INT TEMP
 7    NOP       CHAMB TEMP ↓

 RANGE  AVG   DIAGS ALARM
 8    NOP    CNV TEMP DIFF
 9    NOP             NONE
 10   NOP             NONE
```

## Logic State

The Logic State screen is used to change the I/O relay to either normally open or normally closed.

Press [↵] to toggle and set the logic state between open and closed.

```
OUTPUT RELAY SETUP:
>LOGIC STATE          OPEN
 INSTRUMENT STATE

 RANGE  AVG   DIAGS ALARM
```

**Instrument State**

The Instrument State submenu allows the user to select the instrument state that is tied to the selected relay output. A submenu lists signal types of either alarm and non-alarm to choose from.

In the Main Menu, choose Instrument Controls > I/O Configuration > Output Relay Settings > Select Relay > **Instrument State**.

```
CHOOSE SIGNAL TYPE:
>ALARMS
 NON-ALARM

 RANGE  AVG   DIAGS ALARM
```

**Alarms**

The Alarms status screen allows the user to select the alarm status for the selected relay output. The selected item is shown by "<--" after it.

In the Main Menu, choose Instrument Controls > I/O Configuration > Output Relay Settings > Select Relay > Instrument State > **Alarms**.

**Note** The I/O BD STATUS alarm is only present if the I/O expansion board is installed. ZERO CHK/CAL and SPAN CHK/CAL are only present if autozero/span check is enabled. ▲

```
ALARM STATUS ITEMS:
>NONE                <--
 GEN ALARM
 SO2 CONC MAX
 SO2 CONC MIN
 H2S CONC MAX
 H2S CONC MIN
 CS CONC MAX          ⬇

 RANGE  AVG   DIAGS ALARM
```

```
 CS CONC MIN
 INT TEMP
```

```
CHAMB TEMP
CONV TEMP
PGAS TEMP
PRESSURE
SAMPLE FLOW
FLASH REF
FLASH VOLTS
MB STATUS
MIB STATUS
I/O BD STATUS
CONC ALARM
ZERO CHK/CAL
SPAN CHK/CAL
```

## Non-Alarm

The Non-Alarm status screen allows the user to select the non-alarm status for the selected relay output. The selected item is shown by "<--" after it.

In the Main Menu, choose Instrument Controls > I/O Configuration > Output Relay Settings > Relay 1-10 > Instrument State > **Non-Alarm**.

```
NON ALARM STATUS ITEMS:
>NONE                <--
 SERVICE
 ZERO MODE
 SPAN MODE
 SAMPLE MODE
 FILTER MODE
 PURGE MODE            ↓

 RANGE  AVG   DIAGS ALARM
 LOCAL/REMOTE
```

## Digital Input Settings

The Digital Input Settings menu displays a list of the 16 digital inputs available, and allows the user to select the instrument parameter or logic state to change for the relay selected.

**Note** The digital inputs must be asserted for at least one second for the action to be activated. ▲

**Note** Not all of the I/O available in the instrument are brought out on the supplied terminal board, if more I/O is desired, an alternative means of connection is required. ▲

In the Main Menu, choose Instrument Controls > I/O Configuration > **Digital Input Settings**.

```
DIGITAL INPUT SETTINGS:
>1    NOP        ZERO MODE
 2    NOP        SPAN MODE
 3    NOP      SAMPLE MODE
 4    NOP      FILTER MODE
 5    NOP  SET BACKGROUND
 6    NOP     CAL TO SPAN
 7    NOP   AOUTS TO ZERO ↓

 RANGE  AVG   DIAGS ALARM
```

```
 8    NOP     AOUTS TO FS
 9    NOP            NONE
 10   NOP            NONE
 11   NOP            NONE
 12   NOP            NONE
 13   NOP            NONE
 14   NOP            NONE
 15   NOP            NONE
 16   NOP            NONE
```

## Logic State

The Logic State screen is used to change the I/O relay to either normally open or normally closed. The default state is open, which indicates that a relay connected between the digital input pin and ground is normally open and closes to trigger the digital input action. If nothing is connected to the digital input pin, the state should be left at open to prevent the action from being triggered.

Press [↵] to toggle and set the logic state open or closed.

```
DIGITAL INPUT SETUP:
>LOGIC STATE          OPEN
 INSTRUMENT ACTION




 RANGE  AVG   DIAGS ALARM
```

## Instrument Action

The Instrument Action screen allows the user to select the instrument state that is tied to the selected digital input.

In the Main Menu, choose Instrument Controls > I/O Configuration > Digital Input Settings > Select Relay > **Instrument Action**.

```
CHOOSE ACTION:
>NONE                    <--
 ZERO MODE
 SPAN MODE
 SAMPLE MODE
 FILTER MODE
 SET BACKGROUND
 CAL TO SPAN              ↓

 RANGE  AVG   DIAGS ALARM
```

```
AOUTS TO ZERO
AOUTS TO FS
```

## Analog Output Configuration

The Analog Output Configuration menu displays a list of the analog output channels available for configuration. Channel choices include all voltage channels, all current channels, voltage channels 1-6, and current channels 1-6. Configuration choices include selecting range, setting minimum/maximum values, and choosing signal to output.

In the Main Menu, choose Instrument Controls > I/O Configuration > **Analog Output Config**.

```
OUTPUT CHANNELS:
>ALLOW OVER/UNDER RANGE
 ALL VOLTAGE CHANNELS
 ALL CURRENT CHANNELS
 VOLTAGE CHANNEL 1
 VOLTAGE CHANNEL 2
 VOLTAGE CHANNEL 3
 VOLTAGE CHANNEL 4        ↓

 RANGE  AVG  DIAGS ALARM
```

```
ANALOG OUTPUT CONFIG:
>SELECT RANGE
 SET MINIMUM VALUE
 SET MAXIMUM VALUE
 CHOOSE SIGNAL TO OUTPUT



 RANGE  AVG   DIAGS ALARM
```

```
VOLTAGE CHANNEL 5
VOLTAGE CHANNEL 6
CURRENT CHANNEL 1
CURRENT CHANNEL 2
CURRENT CHANNEL 3
CURRENT CHANNEL 4
CURRENT CHANNEL 5
CURRENT CHANNEL 6
```

## Allow Over/Under Range

The Allow Over/Under Range screen is used to select whether or not the analog outputs are allowed to exceed the maximum selected value of 100 mV, 1 V, 5 V, 10 V, or 20 mA or the minimum selected value of 0 V, 0 mA, or 4 mA. By default this parameter is set to on, and 5% over and under range is allowed for all analog output channels.

In the Main Menu, choose Instrument Controls > I/O Configuration > Analog Output Config > **Allow Over/Under Range**.

```
ALLOW OVER/UNDER RANGE:
 CURRENTLY:          OFF
    SET TO:           ON  ?

          ↵ TOGGLE VALUE

 RANGE  AVG  DIAGS ALARM
```

## Select Output Range

The Select Output Range screen is used to select the hardware range for the selected analog voltage output channel. Possible ranges for the voltage outputs are: 0-100 mV, 0-1, 0-5, 0-10 V.

In the Main Menu, choose Instrument Controls > I/O Configuration > Analog Output Config > Select Channel > **Select Range**.

```
SELECT OUTPUT RANGE:
 SELECTED OUTPUT:    V 1
 CURRENTLY:        0-10V
    SET TO:         0-5V  ?

 ↑↓ CHANGE VALUE    ↵ SAVE

 RANGE  AVG   DIAGS ALARM
```

## Minimum and Maximum Value

The Minimum Value screen is used to edit the zero (0) to full-scale (100) value in percentages for the selected analog output channel. See **Table 3–3** for a list of choices. The minimum and maximum output value screens function the same way. The example that follows shows the set minimum value screen.

In the Main Menu, choose Instrument Controls > IO Configuration > Analog Output Config > Select Channel > **Set Minimum** or **Maximum Value**.

```
MINIMUM OUTPUT PERCENT:
 SELECTED OUTPUT:   V 1
 CURRENTLY:         N/A %
    SET TO:      0000.0 % ?

 ↑↓ CHANGE VALUE    ↵ SAVE

 RANGE  AVG   DIAGS ALARM
```

**Table 3–3.** Analog Output Zero to Full Scale Values

| Output | Zero % value | Full Scale 100 % value |
|---|---|---|
| CONT $SO_2$ | Zero ( 0 ) | 20 concentration units |
| F0 AVERAGE | | |
| F1 AVERAGE | | |
| SMP AVERAGE | | |
| FILTER BKG | | |
| CONT $SO_4$ | Zero ( 0 ) | Range Setting |
| BATCH $SO_4$ | | |
| F0 STD DEV | Zero ( 0 ) | 1 concentration unit |
| F1 STD DEV | | |
| SMP STD DEV | | |
| F0 POINTS | Zero ( 0 ) | 14,400 (total possible number of points) |
| F1 POINTS | | |
| SMP POINTS | Zero ( 0 ) | 36,000 (total possible number of points) |
| Internal Temp | User-set alarm min value | User-set alarm max value |
| Chamber Temp | | |
| Converter Temp Top | | |
| Converter Temp Btm | | |
| Perm Oven Gas Temp | Perm oven GAS alarm min value | Perm oven GAS alarm max value |
| Perm Oven Heater Temp | | |
| Chamber Pressure | User-set alarm min value | User-set alarm max value |
| Ambient Pressure | | |
| Sample Flow | | |
| PMT Volts | 500 volts | 1200 volts |
| Flash Voltage | User-set alarm min value | User-set alarm max value |
| Flash Ref | | |
| Converter Flow | | |
| Ambient Temperature | -45 deg. C | 55 deg. C |
| Everything Else | 0 units | 10 units |

## Choose Signal To Output

The Choose Signal To Output screen displays a submenu list of the analog output signal group choices. Group choices are Concentrations, Other Measurements, and Analog Inputs (if the I/O expansion board is installed). This allows the user to select the output signal to the selected output channel. The Concentrations screen is shown below. See **Table 3–4** that follows for a list of items for each signal group choice.

In the Main Menu, choose Instrument Controls > I/O Configuration > Analog Output Config > Select Channel > **Choose Signal To Output**.

```
CHOOSE SIGNAL TYPE:
>CONCENTRATIONS
 OTHER MEASUREMENTS
 ANALOG INPUTS

 RANGE   AVG   DIAGS ALARM
```

```
CHOOSE SIGNAL -       CONC
 SELECTED OUTPUT:      V1
 CURRENTLY: CONC SO2
    SET TO: CONC SO2

 ↑↓ CHANGE VALUE    ↵ SAVE

 RANGE   AVG   DIAGS ALARM
```

**Table 3–4.** Signal Types Group Choices

| Concentrations | Other Measurements | Analog Inputs | |
|---|---|---|---|
| NONE | NONE | NONE | |
| CONT SO2 | INT TEMP | ANALOG IN 1 | I/O Expansion Board installed |
| CONT SO4 | CHAMBER TEMP | ANALOG IN 2 | I/O Expansion Board installed |
| BATCH SO4 | CNV TEMP TOP | ANALOG IN 3 | I/O Expansion Board installed |
| F0 AVERAGE | CNV TEMP BTM | ANALOG IN 4 | I/O Expansion Board installed |
| F0 STD DEV | PERM OVN GAS | ANALOG IN 5 | I/O Expansion Board installed |

| Concentrations | Other Measurements | Analog Inputs | |
|---|---|---|---|
| F0 POINTS | PERM OVN HTR | ANALOG IN 6 | I/O Expansion Board installed |
| F1 AVERAGE | CHAMBER PRES | ANALOG IN 7 | I/O Expansion Board installed |
| FI STD DEV | SAMPLE FLOW | ANALOG IN 8 | I/O Expansion Board installed |
| F1 POINTS | PMT VOLTS | | |
| SMP AVERAGE | FLASH VOLTS | | |
| SMP STD DEV | FLASH REF | | |
| SMP POINTS | CONV FLOW | | |
| FILTER BKG | AMBIENT TEMP | | |
| | AMBIENT PRES | | |

## Analog Input Configuration

The Analog Input Configuration menu displays a list of the 8 analog input channels available for configuration. This screen is only displayed if the I/O expansion board option is installed. Configuration includes entering descriptor, units, decimal places, and choice of 2-10 table points, and corresponding number of points selected.

In the Main Menu, choose Instrument Controls > I/O Configuration > **Analog Input Config**.

```
ANALOG INPUT CONFIG:
>CHANNEL 1              IN1
 CHANNEL 2              IN2
 CHANNEL 3              IN3
 CHANNEL 4              IN4
 CHANNEL 5              IN5
 CHANNEL 6              IN6
 CHANNEL 7              IN7↓

 RANGE  AVG   DIAGS ALARM
 CHANNEL 8              IN8
```

```
ANALOG INPUT 01 CONFIG:
>DESCRIPTOR             IN1
 UNITS                    V
 DECIMAL PLACES           2
 TABLE POINTS             2
 POINT 1
 POINT 2

 RANGE  AVG   DIAGS ALARM
```

### Descriptor

The Descriptor screen allows the user to enter the descriptor for the selected analog input channel. The descriptor is used in datalogging and streaming data to report what data is being sent out. The descriptor may be from 1 to 3 characters in length, and defaults to IN1to IN8 (user input channel number).

In the Main Menu, choose Instrument Controls > I/O Configuration > Analog Input Config > Select Channel > **Descriptor**.

```
ANALOG INPUT DESCRIPTOR:
          ■
     ABCDEFGHIJKLMN  BKSP
     OPQRSTUVWXYZ    PAGE
     0123456789 ./-  SAVE

 RANGE  AVG   DIAGS ALARM
```

### Units

The Units screen allows the user to enter the units for the selected analog input channel. The units are displayed on the diagnostic screen and in datalogging and streaming data. The units may be from 1 to 3 characters in length, and defaults to V (volts).

In the Main Menu, choose Instrument Controls > I/O Configuration > Analog Input Config > Select Channel > **Units**.

```
ANALOG INPUT UNITS:
          ■
     ABCDEFGHIJKLMN  BKSP
     OPQRSTUVWXYZ    PAGE
     0123456789 ./-  SAVE

 RANGE  AVG   DIAGS ALARM
```

### Decimal Places

The Decimal Places screen allows the user to select how many digits are displayed to the right of the decimal, from 0 to 6, with a default of 2.

In the Main Menu, choose Instrument Controls > I/O Configuration > Analog Input Config > Select Channel > **Decimal Places**.

```
DECIMAL PLACES:
 CURRENTLY:                2
    SET TO:                3 ?

          ↑↓ INC/DEC
           ↵ SAVE VALUE

 RANGE  AVG   DIAGS ALARM
```

## Number of Table Points

The Number of Table Points screen allows the user to select how many points are used in the analog input conversion table. The instrument uses linear interpolation between the points in this table to determine what the reading value is based on the analog input voltage. Each point in the table consists of an analog input voltage value (0-10.5 V) and a corresponding reading value. Only two points are necessary for linear inputs, however a larger number of points may be used to approximate non-linear inputs. The points range from 2 to 10, with a default of 2.

In the Main Menu, choose Instrument Controls > I/O Configuration > Analog Input Config > Select Channel > **Table Points**.

```
NUMBER OF TABLE POINTS:
 CURRENTLY:                2
    SET TO:               10 ?

          ↑↓ INC/DEC
           ↵ SAVE VALUE

 RANGE  AVG   DIAGS ALARM
```

## Table Point

The Table Point submenu allows the user to set up an individual table point.

In the Main Menu, choose Instrument Controls > I/O Configuration > Analog Input Config > **Table Point 1-10**.

```
TABLE POINT 01 CONFIG:
>VOLTS                   0.00
 USER VALUE              0.00




 RANGE  AVG   DIAGS ALARM
```

### Volts

The Volts screen allows the user to set the input voltage for the selected table point in the conversion table, from 0.00 to 10.50. The default table is a two-point table with point 1: 0.00 V = 000.0 U and point 2: 10.00 V = 10.0 U.

In the Main Menu, choose Instrument Controls > I/O Configuration > Analog Input Config > Select Table Point > **Volts**.

```
TABLE POINT 01 VOLTS:
 CURRENTLY:          00.00
    SET TO:          00.00

          ↔ MOVE CURSOR
 ↑↓ CHANGE VALUE    ↵ SAVE

 RANGE   AVG    DIAGS ALARM
```

### User Value

The User Value screen allows the user to set the output value for the corresponding input voltage for the selected table point in the conversion table, from -9999999 to 99999999. The default table is a two-point table with point 1: 0.00 V = 000.0 U and point 2: 10.00 V = 10.0 U.

In the Main Menu, choose Instrument Controls > I/O Configuration > Analog Input Config > Select Table Point > **User Value**.

```
TABLE POINT 01 USER VAL:
 CURRENTLY:           0.00
    SET TO:       00000.00

          ↔ MOVE CURSOR
 ↑↓ CHANGE VALUE    ↵ SAVE

 RANGE   AVG    DIAGS ALARM
```

## Temperature Compensation

Temperature compensation provides compensation for any changes to the instrument's output signal due to internal instrument temperature variations. The effects of internal instrument temperature changes on the analyzer's subsystems and output have been empirically determined. This empirical data is used to compensate for any changes in temperature. This compensation can be used for special applications, or when operating the instrument outside the recommended temperature range.

When temperature compensation is on, the first line of the display shows the current internal instrument temperature (measured by a thermistor on

the Interface board). When temperature compensation is off, the first line of the display shows the factory standard temperature of 30 °C.

In the Main Menu, choose Instrument Controls > **Temperature Compensation**.

```
TEMPERATURE COMPENSATION:
 COMP TEMP:        30.0 °C
 CURRENTLY:           OFF
    SET TO:            ON ?

            ↵ TOGGLE VALUE

 RANGE  AVG   DIAGS ALARM
```

## Pressure Compensation

Pressure compensation provides compensation for any changes to the instrument's output signal due to reaction chamber pressure variations. The effects of reaction chamber pressure changes on the analyzer's subsystems and output have been empirically determined. This empirical data is used to compensate for any change in reaction chamber pressure.

When pressure compensation is on, the display represents the current pressure in the fluorescence chamber. When pressure compensation is off, the display shows the factory standard pressure of 750 mmHg.

In the Main Menu, choose Instrument Controls > **Pressure Compensation**.

```
PRESSURE COMPENSATION:
 COMP PRES:    750.0 mmHg
 CURRENTLY:           OFF
    SET TO:            ON ?

            ↵ TOGGLE VALUE

 RANGE  AVG   DIAGS ALARM
```

## Screen Contrast

The Screen Contrast screen is used to change the contrast of the display. Values between 0 and 100% in increments of 5 are available. Changing the screen contrast may be necessary if the instrument is operated at extreme temperatures.

**Notes** The optimal contrast will change with changes in temperature. ▲

The optimal contrast will change from one LCD screen to another. If the LCD screen is replaced, the contrast may need to be reset. ▲

If the display contrast is not optimal, but the content on the screen is visible, select Instrument Controls > **Screen Contrast** and adjust the screen contrast. If the content on the screen is not visible, use the "set contrast" C-Link command to set screen contrast to mid range, then optimize the contrast. See "Contrast Levels" in the "C-Link Protocol Commands" appendix for more information on this command. ▲

In the Main Menu, choose Instrument Controls > **Screen Contrast**.

```
SCREEN CONTRAST:
 CURRENTLY:          50 %
    SET TO:          60 % ?

          ↑↓ CHANGE VALUE
           ↵ SAVE VALUE

 RANGE  AVG   DIAGS ALARM
```

## Service Mode

The Service Mode screen is used to turn the service mode on or off. The service mode locks out any remote actions and includes parameters and functions that are useful when making adjustments or diagnosing the instrument. The service (wrench) icon on the status bar is shown when service mode is on. For more information about the service mode, see "Service Menu" later in this chapter.

**Note** The service mode should be turned off when finished because it prevents remote operation. ▲

In the Main Menu, choose Instrument Controls > **Service Mode**.

```
SERVICE MODE:
 CURRENTLY:           OFF
    SET TO:            ON ?

           ↵ TOGGLE VALUE

 RANGE  AVG   DIAGS ALARM
```

## Date/Time

The Date/Time screen and allows the user to view and change the system date and time (24-hour format). The internal clock is powered by its own battery when instrument power is off.

In the Main Menu, choose Instrument Controls > **Date/Time**.

```
DATE AND TIME:
 19 MAR 2005  12:34:56
 PRESS ↵ TO EDIT


 RANGE  AVG  DIAGS ALARM
```

```
DATE AND TIME:
 19 MAR 2005  12:34:56   ?
 SETTING: DAYS
           ➡ SET MONTHS
           ⬆⬇ CHANGE VALUE
            ↵ SAVE VALUE

 RANGE  AVG  DIAGS ALARM
```

## Timezone

The Timezone screen is used to set the timezone for the NTP time server. This should be set to the timezone that the instrument is located in. If the exact timezone is not shown in the list, it may be entered via a CLINK command (see Appendix B). The selections are: UTC (GMT), EST (GMT+5), CST (GMT+6), MST (GMT+7), PST (GMT+8), YST (GMT+9), HST (GMT+10), NST (GMT+11), DLW (GMT+12), CET (GMT-1), EET (GMT-2), BST (GMT-3), DLT (GMT-4), ECH (GMT-5), FOX (GMT-6), GLF (GMT-7), CCT (GMT-8), JST (GMT-9), GST (GMT-10), LMA (GMT-11), DLE (GMT-12), EDT (GMT+5/4), CDT (GMT+6/5), MDT (GMT+7/6), and PDT (GMT+8/7)

In the Main Menu, choose Instrument Controls > **Timezone**.

```
TIMEZONE FOR TIMESERVER:
 CURRENTLY: UTC (GMT)
    SET TO: UTC (GMT)

          ⬆⬇ CHANGE VALUE
           ↵ SAVE VALUE

 RANGE  AVG   DIAGS ALARM
```

# Diagnostics Menu

The Diagnostics menu provides access to diagnostic information and functions. This menu is useful when troubleshooting the instrument. The analog input readings and analog input voltages are only displayed if the I/O expansion board option is installed.

In the Main Menu, choose **Diagnostics**.

```
DIAGNOSTICS:
>PROGRAM VERSIONS
 VOLTAGES
 TEMPERATURES
 PRESSURE
 FLOW
 LAMP INTENSITY
 OPTICAL SPAN TEST          ↓

 RANGE  AVG   DIAGS ALARM
```

```
 ANALOG INPUT READINGS
 ANALOG INPUT VOLTAGES
 DIGITAL INPUTS
 RELAY STATES
 TEST ANALOG OUTPUTS
 INSTRUMENT CONFIGURATION
 CONTACT INFORMATION
```

## Program Versions

The Program Versions screen (read only) shows the version numbers of the programs installed. Prior to contacting the factory with any questions regarding the instrument, please note the product model program version numbers.

In the Main Menu, choose Diagnostics > **Program Versions**.

```
PROGRAM VERSIONS:
   PRODUCT:  MODEL  5020i
   VERSIONS: 00.04.41.054
   FIRMWARE:     09.23.43



 RANGE  AVG   DIAGS ALARM
```

## Voltages

The Voltages menu displays the current diagnostic voltage readings. This screen enables the power supply to be quickly read for low or fluctuating voltages without having to use a voltage meter. The I/O board item is only displayed if the I/O expansion board is installed.

In the Main Menu, choose Diagnostics > **Voltages**.

```
VOLTAGES:
>MOTHERBOARD
 INTERFACE BOARD
 I/O BOARD
 EXT CONVERTER BOARD



 RANGE  AVG   DIAGS ALARM
```

## Motherboard Voltages

The Motherboard screen (read only) is used to display the current voltage readings on the motherboard.

In the Main Menu, choose Diagnostics > Voltages > **Motherboard Voltages**.

```
MOTHERBOARD VOLTAGES:
   3.3 SUPPLY        3.3 V
   5.0 SUPPLY        5.0 V
  15.0 SUPPLY       15.0 V
  24.0 SUPPLY       24.0 V
  -3.3 SUPPLY       -3.3 V


 RANGE  AVG   DIAGS ALARM
```

## Interface Board Voltages

The Interface Board screen (read only) is used to display the current voltage readings on the interface board.

In the Main Menu, choose Diagnostics > Voltages > **Interface Board Voltages**.

```
INTERFACE BOARD VOLTAGES:
   PMT SUPPLY     -612.5 V
 FLASH SUPPLY     1000.0 V
   3.3 SUPPLY        3.3 V
   5.0 SUPPLY        5.0 V
  15.0 SUPPLY       15.0 V
 -15.0 SUPPLY      -15.0 V
  24.0 SUPPLY       24.0 V

 RANGE  AVG   DIAGS ALARM
```

## I/O Board Voltages

The I/O Board screen (read only) is used to display the current voltage readings on the I/O expansion board. This menu is only accessible if the I/O expansion board is installed.

In the Main Menu, choose Diagnostics > Voltages > **I/O Board Voltages**.

```
I/O BOARD VOLTAGES:
   3.3 SUPPLY        3.3 V
   5.0 SUPPLY        5.0 V
  24.0 SUPPLY       24.0 V
  -3.3 SUPPLY       -3.3 V

 RANGE  AVG   DIAGS ALARM
```

## External Converter Board

The External Converter board screen (read only) is used to display the current voltage readings on the ext converter board.

In the Main Menu, choose Diagnostics > Voltages > **Ext Converter Board**.

```
EXT CONV BOARD VOLTAGES:
  15.0 SUPPLY       15.0 V
  24.0 SUPPLY       24.0 V
 -15.0 SUPPLY      -15.0 V

 RANGE  AVG   DIAGS ALARM
```

## Temperatures

The Temperatures screen (read only) displays the current internal instrument temperature and chamber temperature. The internal temperature is the air temperature measured by a sensor located on the interface board. Ambient temperature is read from the 25-foot thermocouple that plugs into the converter rear panel EXTERNAL TEMP connector. The probe sensor is typically located outside the shelter.

In the Main Menu, choose Diagnostics > **Temperatures**.

```
TEMPERATURES:
>INTERNAL          34.6 °C
 CHAMBER           49.7 °C
 CONVERTER TOP      0.0 °C
 CONVERTER BTM      0.0 °C
 CONVERTER AMBIENT  0.0 °C
 PERM OVEN GAS     45.0 °C
 PERM OVEN HEATER  45.0 °C

 RANGE  AVG   DIAGS ALARM
```

## Pressure

The Pressure screen (read only) displays the current optical bench pressure. The pressure is measured by a pressure transducer in-line with the optical bench. The ambient atmospheric pressure is read by a transducer located in the converter module.

In the Main Menu, choose Diagnostics > **Pressure**.

```
PRESSURE:
 CHAMBER:        729.9 mmHg
 AMBIENT:        757.1 mmHg


 RANGE  AVG   DIAGS ALARM
```

## Flow

The Flows screen (read only) displays the current sample flow rate and the flow rate through the converter filter. The flows are measured by internal flow sensors.

In the Main Menu, choose Diagnostics > **Flow**.

```
FLOWS:
 SAMPLE:         0.465 LPM
 CONV FILTER     0.690 LPM


 RANGE  AVG   DIAGS ALARM
```

## Lamp Intensity

The Lamp Intensity screen (read only) displays the current lamp intensity in Hertz. Normally the intensity would read 90%, but this number will decrease over time as the lamp degrades.

In the Main Menu, choose Diagnostics > **Lamp Intensity**.

```
LAMP INTENSITY:      90 %



 RANGE  AVG   DIAGS ALARM
```

## Optical Span Test

The Optical Span Test screen is used to turn the optical span test LED on or off, and displays the $SO_2$ concentration reading. Within the fluorescence chamber is a light emitting diode (LED) which may be used to simulate a particular concentration of $SO_2$. It is designed to provide a quick and easy way of checking the optics and electronics for span drift or other problems.

In the Main Menu, choose Diagnostics > **Optical Span Test**.

```
OPTICAL SPAN TEST:
        SO2:              100
 CURRENTLY:               ON
    SET TO:              OFF ?

            ↵ TOGGLE VALUE

 RANGE   AVG    DIAGS ALARM
```

## Analog Input Readings

The Analog Input Readings screen (read only) displays the 8 current user-scaled analog readings (if the I/O expansion board option is installed).

In the Main Menu, choose Diagnostics > **Analog Input Readings**.

```
ANALOG INPUT READINGS:
>NO                10.2 PPB
 NO2               18.2 PPB
 CO2                250 PPM
 FL1              20.42 LPM
 WND               9.86   V
 FL2              1.865 LPM
 IO7                0.0   V↓

 RANGE   AVG    DIAGS ALARM
 IO8                0.0   V
```

## Analog Input Voltages

The Analog Input Voltages screen (read only) displays the 8 raw analog voltage readings (if the I/O expansion board option is installed).

In the Main Menu, choose Diagnostics > **Analog Input Voltages**.

```
ANALOG INPUT VOLTAGES:
>ANALOG IN 1        6.24 V
 ANALOG IN 2        4.28 V
 ANALOG IN 3        0.00 V
 ANALOG IN 4        0.00 V
 ANALOG IN 5        0.00 V
 ANALOG IN 6        0.00 V
 ANALOG IN 7        0.00 V↓

 RANGE  AVG   DIAGS ALARM
 ANALOG IN 8        0.00 V
```

## Digital Inputs

The Digital Inputs screen (read only) displays the state of the 16 digital inputs. Pull-ups are provided on all the inputs, so if nothing is connected they will read (1), if an input is brought to ground, it will read (0).

In the Main Menu, choose Diagnostics > **Digital Inputs**.

```
DIGITAL INPUTS:
>INPUT 1                1
 INPUT 2                1
 INPUT 3                1
 INPUT 4                1
 INPUT 5                1
 INPUT 6                1
 INPUT 7                1↓

 RANGE  AVG   DIAGS ALARM
 INPUT 8                1
 INPUT 9                1
 INPUT 10               1
 INPUT 11               1
 INPUT 12               1
 INPUT 13               1
 INPUT 14               1
 INPUT 15               1
 INPUT 16               1
```

## Relay States

The Relay States screen displays the state of the 10 digital outputs and allows toggling of the state to either on (1) or off (0). The relays are restored to their original states upon exiting this screen.

In the Main Menu, choose Diagnostics > **Relay States**.

Press [↵] to toggle the relay state open and closed.

```
RELAY STATE:
>OUTPUT    1          1
 OUTPUT    2          0
 OUTPUT    3          0
 OUTPUT    4          1
 OUTPUT    5          0
 OUTPUT    6          0
 OUTPUT    7          0↓

 RANGE  AVG   DIAGS ALARM
 OUTPUT    8          0
 OUTPUT    9          0
 OUTPUT   10          0
```

## Test Analog Outputs

The Test Analog Outputs menu contains a number of digital to analog converter (DAC) calibration items. Channel choices include all analog outputs, 6 voltage channels, and 6 current channels (if the I/O expansion board option is installed).

In the Main Menu, choose Diagnostics > **Test Analog Outputs**.

```
TEST ANALOG OUTPUTS:
>ALL
 VOLTAGE CHANNEL 1
 VOLTAGE CHANNEL 2
 VOLTAGE CHANNEL 3
 VOLTAGE CHANNEL 4
 VOLTAGE CHANNEL 5
 VOLTAGE CHANNEL 6      ↓

 RANGE  AVG   DIAGS ALARM
 CURRENT CHANNEL 1
 CURRENT CHANNEL 2
 CURRENT CHANNEL 3
 CURRENT CHANNEL 4
 CURRENT CHANNEL 5
 CURRENT CHANNEL 6
```

### Set Analog Outputs

The Set Analog Outputs screen contains three choices: Set to full-scale, set to zero, or reset to normal. Full-scale sets the analog outputs to the full-scale voltage, zero sets the analog outputs to 0 volts, and normal operation. The example that follows shows the selected output state “ALL” is set to full-scale.

In the Main Menu, choose Diagnostics > Test Analog Outputs > **ALL**, **Voltage Channel 1-6**, or **Current Channel 1-6**.

```
SET ANALOG OUTPUTS:
 SETTING:                ALL
 OUTPUT SET TO: FULL SCALE
 ↑ SET TO FULL SCALE
 ↓ SET TO ZERO
 ← RESET TO NORMAL

 RANGE  AVG   DIAGS ALARM
```

## Instrument Configuration

The Instrument Configuration screen displays information on the hardware configuration of the instrument.

In the Main Menu, choose Diagnostics > **Instrument Configuration**.

**Note** If the analyzer is in service mode, pressing [↵] on the item will toggle it yes or no (with the exception of auto calibration, which may only be enabled at the factory). ▲

```
INSTRUMENT CONFIGURATION:
>I/O EXPANSION BOARD  YES
 ZERO/SPAN VALVES     YES
 PERM OVEN             NO
 AUTO CALIBRATION     YES



 RANGE  AVG   DIAGS ALARM
```

## Contact Information

The Contact Information screen displays the customer service information.

In the Main Menu, choose Diagnostics > **Contact Information**.

```
CONTACT INFORMATION:
 CALL CENTER: 508-520-0430
 WEB:        WWW.THERMO.COM

 RANGE  AVG   DIAGS ALARM
```

# Alarms Menu

The alarms menu displays a list of items that are monitored by the analyzer. If any alarms are active, the alarm (bell) icon is displayed on the right side of the status bar. If the item being monitored goes outside the lower or upper limit, the status of that item will go from “OK” to either “LOW” or “HIGH”, respectively. If the alarm is not a level alarm, the status will go from “OK” to “FAIL”. The number of alarms detected is displayed to

indicate how many alarms have occurred. If no alarms are detected, the number zero is displayed.

To see the actual reading of an item and its minimum and maximum limits, move the cursor to the item and press [↵].

Items displayed are determined by the options installed. The motherboard status, interface board status, and I/O expansion board status (if installed) indicates that the power supplies are working and connections are successful. There are no setting screens for these alarms.

In the Main Menu, choose **Alarms**.

```
ALARMS:
 ALARMS DETECTED          0
>INTERNAL TEMP           OK
 CHAMBER TEMP            OK
 CONVERTER TEMP
 CONVERTER TEMP DIFF     OK
 PERM GAS TEMP         HIGH
 CHAMBER PRESSURE       LOW↓

 RANGE  AVG   DIAGS ALARM
```

```
 SAMPLE FLOW             OK
 CONV FLOW               OK
 AMBIENT TEMP            OK
 AMBIENT PRESSURE        OK
 LAMP INTENSITY          OK
 LAMP VOLTAGE            OK
 AUTO TIMING             OK
 DATA WARNING            OK
 ZERO CHECK              OK
 SPAN CHECK              OK
 ZERO AUTOCAL            OK
 SPAN AUTOCAL            OK
 SO4 CONCENTRATION       OK
 MOTHERBOARD STATUS      OK
 INTERFACE STATUS        OK
 I/O EXP STATUS          OK
 EXT CONV STATUS         OK
```

## Internal Temperature

The internal temperature screen displays the current temperature being measured by a sensor located on the analyzer interface board, and sets the minimum and maximum alarm limits. Acceptable alarm limits range from 8 to 47 °C. The alarm (bell) icon appears in status bar on the Run screen and in the Main Menu.

In the Main Menu, choose Alarms > **Internal Temp**.

```
INTERNAL TEMPERATURE:
 ACTUAL            30.1  °C
>MIN               15.0  °C
 MAX               45.0  °C

 RANGE  AVG   DIAGS ALARM
```

### Min and Max Internal Temperature Limits

The Minimum Internal Temperature alarm limit screen is used to change the minimum internal temperature alarm limit. The minimum and maximum internal temperature screens function the same way.

In the Main Menu, choose Alarms > Internal Temp > **Min** or **Max**.

```
INTERNAL TEMPERATURE:
 ACTUAL MIN:      15.0  °C
 SET MIN TO:      10.0  °C ?

          ↑↓ INC/DEC
           ↵ SAVE VALUE

 RANGE  AVG   DIAGS ALARM
```

## Chamber Temperature

The Chamber Temperature screen displays the current chamber temperature which is measured by a sensor located on the bottom surface of the analyzer's optical bench, and sets the minimum and maximum alarm limits. The chamber temperature is regulated at 45.0 °C. Acceptable alarm limits range from 43 to 47 °C. If the chamber temperature reading goes beyond either the minimum or maximum limit, an alarm is activated and the alarm (bell) icon appears in status bar on the Run screen and in the Main Menu.

In the Main Menu, choose Alarms > **Chamber Temp**.

```
CHAMBER TEMPERATURE:
 ACTUAL            45.4  °C
>MIN               43.0  °C
 MAX               47.0  °C

 RANGE  AVG   DIAGS ALARM
```

### Min and Max Chamber Temperature Limits

The Minimum Chamber Temperature alarm limit screen is used to change the minimum chamber temperature alarm limit. The minimum and maximum internal temperature screens function the same way.

In the Main Menu, choose Alarms > Chamber Temp > **Min** or **Max**.

```
CHAMBER TEMPERATURE:
 ACTUAL MIN        45.4  °C
 SET MIN TO:       44.0  °C
 MAX               45.1  °C

          ↑↓ INC/DEC
           ↵ SAVE VALUE

 RANGE  AVG  DIAGS ALARM
```

## Converter Temperature

The Converter Temperature screen is used to view and set the converter temperature alarm parameters. If the converter temperature reading goes beyond either the minimum or maximum limit, an alarm is activated and the alarm (bell) icon appears in status bar on the Run screen and in the Main Menu.

In the Main Menu, choose Alarms > **Converter Temp**.

```
CONVERTER TEMPERATURE:
 ACTUAL (TOP)        0.0 °C
 ACTUAL (BTM)        0.0 °C
>MIN              1015.0 °C
>MAX              1065.0 °C



 RANGE  AVG   DIAGS ALARM
```

### Min and Max Converter Temperature Limits

The Minimum Converter Temperature alarm limit screen is used to change the minimum converter temperature alarm limit. The minimum and maximum internal temperature screens function the same way.

In the Main Menu, choose Alarms > Converter Temp > **Min** or **Max**.

```
CONVERTER TEMPERATURE:
 ACTUAL MIN  1015.0 °C
 SET MIN TO: 1020.0 °C

          ↑↓ INC/DEC
           ↵ SAVE VALUE

 RANGE  AVG  DIAGS ALARM
```

## Converter Temperature Differential

The Converter Temperature Differential is a read-only parameter that indicates the temperature difference between the upper half and lower half of the converter heater. An alarm shows FAIL if the difference between the top and bottom is greater than 125 °C.

## Permeation Oven Gas Temperature

The Permeation Oven Gas Temperature screen displays the current permeation oven gas temperature and sets the minimum and maximum alarm limits. Acceptable alarm limits range from 25.00 to 50.00 °C. If the temperature reading goes beyond either the minimum or maximum limit, an alarm is activated. The word “ALARM” appears in the Run screen and in the Main Menu.

In the Main Menu, choose Alarms > **Perm Gas Temp**.

```
POVEN GAS TEMPERATURE:
 ACTUAL          45.00 °C
>MIN             44.90 °C
 MAX             45.10 °C



 RANGE  AVG  DIAGS ALARM
```

### Min and Max Permeation Oven Temperature Limits

The Minimum Permeation Oven Gas Temperature alarm limit screen is used to change the minimum temperature alarm limit. The minimum and maximum permeation gas temperature screens function the same way.

In the Main Menu, choose Alarms > Perm Gas Temp > **Min** or **Max**.

```
POVEN GAS TEMPERATURE:
 ACTUAL MIN      44.95 °C
 SET MIN TO:     44.90 °C ?

          ↑↓ INC/DEC
           ↵ SAVE VALUE

 RANGE  AVG  DIAGS ALARM
```

## Chamber Pressure

The Pressure screen displays the current reaction chamber pressure reading and sets the minimum and maximum alarm limits. The pressure is read by a transducer located in the sample line just downstream of the optical bench. The chamber pressure typically runs slightly below atmospheric. Acceptable alarm limits range from 400 to 1000 mmHg. If the pressure reading goes beyond either the minimum or maximum limit, an alarm is activated and the alarm (bell) icon appears in status bar on the Run screen and in the Main Menu.

In the Main Menu, choose Alarms > **Pressure**.

```
PRESSURE:
 ACTUAL          750.0 mmHg
>MIN             400.0 mmHg
 MAX            1000.0 mmHg



 RANGE  AVG   DIAGS ALARM
```

### Min and Max Pressure Limits

The Minimum Pressure alarm limit screen is used to change the minimum pressure alarm limit. The minimum and maximum pressure screens function the same way.

In the Main Menu, choose Alarms > Pressure > **Min** or **Max**.

```
PRESSURE:
 ACTUAL MIN:    400.0 mmHg
 SET MIN TO:    500.0 mmHg?

          ↑↓ INC/DEC
           ↵ SAVE VALUE

 RANGE  AVG   DIAGS ALARM
```

## Sample Flow

The Sample Flow screen displays the current sample flow reading and sets the minimum and maximum alarm limits. Acceptable alarm limits range from 0 to 2.5 LPM. If the sample flow reading goes beyond either the minimum or maximum limit, an alarm is activated and the alarm (bell) icon appears in status bar on the Run screen and in the Main Menu. Sample flow is measured by a sensor located downstream of the optical bench and typically ranges from 0.450 to 0.550 LPM.

In the Main Menu, choose Alarms > **Sample Flow**.

```
SAMPLE FLOW:
 ACTUAL          0.550 LPM
>MIN             0.000 LPM
 MAX             1.000 LPM

 RANGE  AVG   DIAGS ALARM
```

### Min and Max Sample Flow Limits

The Minimum Sample Flow alarm limit screen is used to change the minimum sample flow alarm limit. The minimum and maximum sample flow screens function the same way.

In the Main Menu, choose Alarms > Sample Flow > **Min** or **Max**.

```
SAMPLE FLOW:
 ACTUAL MIN:   0.250 LPM
 SET MIN TO:   0.300 LPM ?

          ↑↓ INC/DEC
           ↵ SAVE VALUE

 RANGE  AVG   DIAGS ALARM
```

## Converter Flow

The Converter Filter Flow screen displays the current converter filter flow reading and sets the minimum and maximum alarm limits. Acceptable alarm limits range from 0 to 2.5 LPM. If the converter filter flow reading goes beyond either the minimum or maximum limit, an alarm is activated. The word “ALARM” appears in the Run screen and in the Main Menu.

In the Main Menu, choose Alarms > **Conv Flow**.

```
CONV FILTER FLOW:
 ACTUAL          0.550 LPM
>MIN             0.000 LPM
 MAX             1.000 LPM

 RANGE  AVG   DIAGS ALARM
```

### Min and Max Converter Flow Limits

The Minimum Sample Flow alarm limit screen is used to change the minimum sample flow alarm limit. The minimum and maximum sample flow screens function the same way.

In the Main Menu, choose Alarms > Conv Flow > **Min** or **Max**.

```
CONV FILTER FLOW:
 ACTUAL MIN:   0.250 LPM
 SET MIN TO:   0.300 LPM ?

          ↑↓ INC/DEC
           ↵ SAVE VALUE

 RANGE  AVG   DIAGS ALARM
```

## Ambient Temperature

Ambient Temperature is a read-only parameter that displays the current alarm by the converter external ambient temperature thermocouple. In most installations, the actual sensor is located outside near the sampling system inlet.

## Ambient Pressure

Ambient Pressure is a read-only parameter that displays the current alarm by the converter pressure sensor.

## Lamp Intensity

The Lamp Intensity screen displays the current lamp intensity reading and sets the minimum and maximum alarm limits. Acceptable alarm limits range from 20 to 100 percent. If the lamp intensity reading goes beyond either the minimum or maximum limit, an alarm is activated and the alarm (bell) icon appears in status bar on the Run screen and in the Main Menu.

In the Main Menu, choose Alarms > **Lamp Intensity**.

```
LAMP INTENSITY:
 ACTUAL                 90 %
>MIN                    40 %
 MAX                   100 %

 RANGE  AVG   DIAGS ALARM
```

### Min and Max Lamp Intensity Limits

The Minimum Lamp Intensity alarm limit screen is used to change the minimum lamp intensity alarm limit. The minimum and maximum lamp intensity screens function the same way.

In the Main Menu, choose Alarms > Lamp Intensity > **Min** or **Max**.

```
LAMP INTENSITY:
 ACTUAL MIN:            40 %
 SET MIN TO:            50 % ?

          ↑↓ INC/DEC
           ↵ SAVE VALUE

 RANGE  AVG   DIAGS ALARM
```

## Lamp Voltage

The Lamp Voltage screen displays the current lamp voltage and sets the minimum and maximum alarm limits. Acceptable alarm limits range from 500 to 1200 volts. If the lamp voltage goes beyond either the minimum or maximum limit, an alarm is activated and the alarm (bell) icon appears in status bar on the Run screen and in the Main Menu.

In the Main Menu, choose Alarms > **Lamp Voltage**.

```
LAMP VOLTAGE:
 ACTUAL               1000 V
>MIN                   750 V
 MAX                  1200 V
```

### Min and Max Lamp Voltage Limits

The Minimum Lamp Voltage alarm limit screen is used to change the minimum lamp voltage alarm limit. The minimum and maximum lamp voltage screens function the same way.

In the Main Menu, choose Alarms > Lamp Voltage > **Min** or **Max**.

```
LAMP VOLTAGE:
 ACTUAL MIN:        750 V
 SET MIN TO:        700 V ?

          ↑↓ INC/DEC
           ↵ SAVE VALUE

 RANGE  AVG   DIAGS ALARM
```

## Auto Timing

Auto Timing is a read-only parameter that shows FAIL if the measurement timing valves are not properly set. See Measurement Timing menu items for more details on the proper time setting.

## Data Warning

Currently not used.

## Zero and Span Check

The Zero and Span Check screen allows the user to view the status of the most recent zero/span checks and set the maximum check offsets. An alarm will be triggered if a zero or span check indicates drift that exceeds the offset value. The zero and span check screens are visible only if the zero/span check option is enabled. Their functions are similar.

In the Main Menu, choose Alarms > **Zero** or **Span Check**.

```
ZERO CHECK:
      ALARM:              OK
   RESPONSE:             1.0
>MAX OFFSET:             5.0



 RANGE  AVG   DIAGS ALARM
```

### Max Zero and Span Offset

The Max Zero Check Offset screen is used to change the maximum zero check offset. The maximum zero and span offset screens function the same way.

In the Main Menu, choose Alarms > Zero or Span Check > **Max Offset**.

```
MAX ZERO CHECK OFFSET:
  CURRENTLY:          5.0
     SET TO:   000010.00 ?

          ↔ MOVE CURSOR
           ↵ SAVE

 RANGE  AVG   DIAGS ALARM
```

## Zero and Span Auto Calibration

The Zero and Span Auto Calibration screens (read only) allow the user to view the status of the most recent auto background calibration or span calibrations. The zero and span auto calibration screens are visible only if the zero/span check option is enabled and the zero or span cal reset function is enabled.

In the Main Menu, choose Alarms > **Zero** or **Span Autocal**.

```
ZERO AUTO CALIBRATION:
      ALARM:            OK
   RESPONSE:           1.2



 RANGE  AVG   DIAGS ALARM
```

## $SO_4$ Concentration

The $SO_4$ Concentration screen displays the current $SO_4$ concentration and sets the maximum alarm limit. Acceptable alarm limits range from 0 to 1000 ppb or 2000 µg/m$^3$. The minimum alarm may be programmed as a floor trigger (alarm is triggered when the concentration falls below the minimum value) or a ceiling trigger (alarm is triggered when the concentration goes above the minimum value). If the $SO_4$ concentration goes beyond either the minimum or maximum limit, an alarm is activated and the alarm (bell) icon appears in status bar on the Run screen and in the Main Menu.

In the Main Menu, choose Alarms > **$SO_4$ Concentration**.

```
SO4 CONCENTRATION:
 ACTUAL                 5.1
>MIN                   -5.0
 MAX                   80.0
 MIN TRIGGER          FLOOR



 RANGE   AVG    DIAGS ALARM
```

## Min and Max $SO_4$ Concentration Limits

The Minimum $SO_4$ Concentration alarm limit screen is used to change the minimum $SO_4$ concentration alarm limit. The minimum and maximum $SO_4$ concentration alarm limit screens function the same way.

In the Main Menu, choose Alarms > $SO_4$ Concentration> **Min** or **Max**.

```
SO4 CONCENTRATION:
 ACTUAL MIN:          -5.0
 SET MIN TO:     -00002.3 ?

          ⬅➡ MOVE CURSOR
 ⬆⬇ INC/DEC ↵ SAVE VALUE

 RANGE   AVG    DIAGS ALARM
```

## Min Trigger

The Minimum Trigger screen allows the user to view and set the $SO_4$ concentration alarm trigger type to either floor or ceiling. The minimum alarm may be programmed as a floor trigger (alarm is triggered when the concentration falls below the minimum value) or a ceiling trigger (alarm is triggered when the concentration goes above the minimum value).

In the Main Menu, choose Alarms > $SO_4$ Concentration > **Min Trigger**.

```
MIN TRIG(CEILING/FLOOR):
 ACTUAL TRIGGER: CEILING
 SET TRIGGER TO:   FLOOR ?


 ↵ TOGGLE AND SAVE VALUE

 RANGE   AVG    DIAGS ALARM
```

### Motherboard Status

The Motherboard Status parameter indicates the status of the motherboard as OK or Fail. A fail status can result from a defective power supply or lost communication with the board.

### Interface Status

The Interface Status parameter indicates the status of the measurement interface board as OK or Fail. A fail status can result from a defective power supply or lost communication with the board.

### I/O Exp Status

The I/O Exp Status parameter indicates the status of the optional I/O expansion board as OK or Fail. A fail status can result from a defective power supply, lost communication with the board, or the optional I/O expansion board is not installed.

### Ext Converter Status

The Ext Converter Status parameter indicates the status of the optional I/O expansion board as OK or Fail. A fail status can result from a defective power supply or lost communication with the board.

## Service Menu

The Service menu appears only when the instrument is in the service mode. When service mode is active, the service (wrench) icon is displayed on the right side of the status bar. To put the instrument into the service mode:

In the Main Menu, choose Instrument Controls > **Service Mode**.

Advanced diagnostic functions are included in the service mode. Meaningful data should not be collected when the instrument is in the service mode. In dual or auto range modes, “HI” or “LO” multi-point calibration is displayed to indicate the calibration of the high or low concentrations.

**Note** Wait at least 30 seconds for the reading to stabilize before saving the value in the pressure, flow, and temperature screens. ▲

In the Main Menu, choose **Service**.

```
SERVICE:
>FLASH VOLTAGE ADJUSTMENT
 INITIAL FLASH REFERENCE
 PMT SUPPLY SETTINGS
 CONVERTER TEMPERATURE
 CHAMBER PRESSURE CAL
 CNV AMB PRESSURE CAL
 SAMPLE FLOW CAL              ↓

 RANGE  AVG   DIAGS ALARM
```

```
 CNV FILTER FLOW CAL
 INPUT BOARD TEST
 ANALYZER AMBNT TEMP CAL
 CNV AMBNT TEMP CAL
 ANALOG OUT CALIBRATION
 ANALOG INPUT CALIBRATION
 PERM OVEN SETTINGS
 DISPLAY PIXEL TEST
 RESTORE USER DEFAULTS
```

## Flash Voltage Adjustment

The Flash Voltage Adjustment screen allows the user to manually adjust the flasher supply voltage. The flash voltage adjustment screen is visible only when the instrument is in service mode. For more information on the service mode, see “Service Mode” earlier in this chapter.

**Note** This adjustment should only be performed by an instrument service technician. ▲

In the Main Menu, choose Service > **Flash Voltage Adjustment**.

```
SET FLASH VOLTAGE - MAN:
     SUPPLY:        1000 V
     COUNTS:        1425

           ↑↓ INC/DEC
            ↵ SAVE VALUE

 RANGE  AVG   DIAGS ALARM
```

## Initial Flash Reference

The Initial Flash Reference allows the user to view and set the initial flash reference. The initial flash reference screen is visible only when the instrument is in service mode. For more information on the service mode, see “Service Mode” earlier in this chapter.

**Note** This adjustment should only be performed by an instrument service technician. ▲

In the Main Menu, choose Service > **Initial Flash Reference**.

```
SET INITIAL FLASH REF:
   CURRENT REF:     1.50 V

 ↵ SAVE CURRENT REF VOLTS
   AS INITIAL

 RANGE  AVG   DIAGS ALARM
```

## PMT Supply Settings

The Set PMT Voltage screen is used to manually adjust the PMT supply voltage. The PMT voltage adjustment is visible only when the instrument is in service mode. For more information on the service mode, see “Service Mode” earlier in this chapter.

**Note** This adjustment should only be performed by an instrument service technician. ▲

In the Main Menu, choose Service > **PMT Supply Settings**.

```
SET PMT VOLTAGE:
    SET PMT:        -600.0 V
     COUNTS:           790

          ⬆⬇ INC/DEC
           ↵ SAVE VALUE

 RANGE  AVG   DIAGS ALARM
```

## Converter Temperature

The Converter Temperature screen allows the user to adjust the temperature of the $SO_4$ to $SO_2$ converter. The converter temperature is in degrees Celsius, and can be set to any value between 900 °C and 1050 °C.

**Note** Wait at least 30 seconds for the reading to stabilize before saving the value in the pressure, flow, and temperature screens. ▲

In the Main Menu, choose Service > **Converter Temperature**.

```
SET CONVERTER TEMP:
      DEG C:          1040
          ↑↓ INC/DEC
           ↵ SAVE VALUE
 RANGE  AVG   DIAGS ALARM
```

## Chamber Pressure Calibration

The Chamber Sensor Calibration menu is used to calibrate the pressure sensor to zero, span, or restore factory default values. The pressure calibration is visible only when the instrument is in service mode. For more information on the service mode, see “Service Mode” earlier in this chapter.

The pressure sensor’s zero counts and span slope are displayed on the menu.

**Note** This adjustment should only be performed by an instrument service technician. ▲

In the Main Menu, choose Service > **Chamber Pressure Cal**.

```
CHAMBER SENSOR CAL:
>ZERO                 100
 SPAN              1.2200
 SET DEFAULTS
 RANGE  AVG   DIAGS ALARM
```

## Calibrate Pressure Zero

The Calibrate Pressure Zero screen calibrates the pressure sensor at zero pressure.

**Note** A vacuum pump must be connected to the pressure sensor before performing the zero calibration. ▲

In the Main Menu, choose Service > Chamber Pressure Cal > **Zero**.

```
CALIBRATE PRESSURE ZERO:
 CURRENTLY:      0.0 mmHg
    SET TO:      0.0 mmHg ?

 CONNECT VACUUM PUMP AND
   ↵ SAVE ZERO PRESSURE

 RANGE  AVG   DIAGS ALARM
```

## Calibrate Pressure Span

The Calibrate Pressure Span screen allows the user to view and set the pressure sensor calibration span point.

**Note** The plumbing going to the pressure sensor should be disconnected so the sensor is reading ambient pressure before performing the span calibration. The operator should use an independent barometer to measure the ambient pressure and enter the value on this screen before calibrating. ▲

In the Main Menu, choose Service > Chamber Pressure Cal > **Span**.

```
CALIBRATE PRESSURE SPAN:
 CURRENTLY:    756.0 mmHg
    SET TO:    760.0 mmHg ?

          ←→ MOVE CURSOR
 ↑↓ CHANGE VALUE    ↵ SAVE

 RANGE  AVG   DIAGS ALARM
```

## Restore Default Pressure Calibration

The Restore Default Pressure Calibration screen allows the user to reset the configuration values to factory defaults.

In the Main Menu, choose Service > Chamber Pressure Cal > **Set Defaults**.

```
RESTORE DEFAULT CAL:
                    ↵ RESTORE

 RANGE  AVG  DIAGS ALARM
```

```
RESTORE DEFAULT CAL:
                    ↵ RESTORE
ARE YOU SURE YOU WANT TO?
PRESS ➡ TO CONFIRM RESTORE

 RANGE  AVG  DIAGS ALARM
```

## Converter Ambient Pressure Calibration

The Converter Ambient Sensor Calibration menu is used to calibrate the converter ambient pressure sensor to zero, span, or restore factory default values. The pressure calibration is visible only when the instrument is in service mode. For more information on the service mode, see "Service Mode" earlier in the chapter.

**Note** This adjustment should only be performed by an instrument service technician. ▲

In the Main Menu, choose Service > **Cnv Amb Pressure Cal**.

```
CNV AMBIENT SENSOR CAL:
>ZERO                 70
 SPAN             1.1416
 SET DEFAULTS

 RANGE  AVG   DIAGS ALARM
```

### Calibrate Converter Pressure Zero

The Calibrate Converter Pressure Zero screen calibrates the converter pressure sensor at zero pressure.

**Note** A vacuum pump must be connected to the pressure sensor before performing the zero calibration. ▲

In the Main Menu, choose Service > Cnv Amb Pressure Cal > **Zero**.

```
CALIBRATE CNV PRESS ZERO:
 CURRENTLY:      0.0 mmHg
    SET TO:      0.0 mmHg ?

 CONNECT VACUUM PUMP AND
   ↵ SAVE ZERO PRESSURE

 RANGE  AVG   DIAGS ALARM
```

## Calibrate Converter Pressure Span

The Calibrate Converter Pressure Span screen allows the user to view and set the converter pressure sensor calibration span point.

**Note** The plumbing going to the pressure sensor should be disconnected so the sensor is reading ambient pressure before performing the span calibration. The operator should use an independent barometer to measure the ambient pressure and enter the value on this screen before calibrating. ▲

In the Main Menu, choose Service > Cnv Amb Pressure Cal > **Span**.

```
CALIBRATE cnv PRESs SPAN:
 CURRENTLY:    756.0 mmHg
    SET TO:    760.0 mmHg ?

          ↔ MOVE CURSOR
 ↑↓ CHANGE VALUE    ↵ SAVE

 RANGE  AVG   DIAGS ALARM
```

## Restore Default Pressure Calibration

The Restore Default Pressure Calibration screen allows the user to reset the configuration values to factory defaults.

In the Main Menu, choose Service > Cnv Amb Pressure Cal > **Set Defaults**.

```
RESTORE DEFAULT CAL:

                ↵ RESTORE


 RANGE  AVG  DIAGS ALARM
```

```
RESTORE DEFAULT CAL:

                ↵ RESTORE
ARE YOU SURE YOU WANT TO?
PRESS → TO CONFIRM RESTORE

 RANGE  AVG  DIAGS ALARM
```

## Sample Flow Calibration

The Sample Flow Sensor Cal menu is used to calibrate the flow sensor to zero, span, or restore factory default values. The flow calibration is visible only when the instrument is in service mode. For more information on the service mode, see “Service Mode” earlier in the chapter.

**Note** Wait at least 30 seconds for the reading to stabilize before saving the value in the pressure, flow, and temperature screens. ▲

**Note** This adjustment should only be performed by an instrument service technician. ▲

In the Main Menu, choose Service > **Sample Flow Cal**.

```
SAMPLE FLOW SENSOR CAL:
>ZERO                 102
 SPAN              1.0000
 SET DEFAULTS

 RANGE  AVG   DIAGS ALARM
```

### Calibrate Sample Flow Zero

The Calibrate Sample Flow Zero screen calibrates the flow sensor at zero flow.

**Note** The pump must be disconnected before performing the zero calibration. ▲

In the Main Menu, choose Service > Flow Calibration > **Zero**.

```
CALIBRATE SMP FLOW ZERO:
 CURRENTLY:    0.000 LPM
    SET TO:    0.000 LPM ?

   DISCONNECT PUMP AND
   ↵ SAVE CURRENT FLOW

 RANGE  AVG   DIAGS ALARM
```

### Calibrate Sample Flow Span

The Calibrate Sample Flow Span screen allows the user to view and set the flow sensor calibrate span point.

**Note** An independent flow sensor is required to read the flow, then the operator enters the flow value on this screen to perform the calibration. ▲

In the Main Menu, choose Service > Flow Calibration > **Span**.

```
CALIBRATE SMP FLOW SPAN:
 CURRENTLY:     0.508 LPM
    SET TO:     0.308 LPM ?

          ⬅➡ MOVE CURSOR
 ⬆⬇ CHANGE VALUE    ↵ SAVE

 RANGE  AVG   DIAGS ALARM
```

### Restore Default Flow Calibration

The Restore Default Flow Calibration screen allows the user to reset the configuration values to factory defaults.

In the Main Menu, choose Service > Flow Calibration > **Set Defaults**.

```
RESTORE DEFAULT CAL:
                  ↵ RESTORE


 RANGE  AVG  DIAGS ALARM
```

```
RESTORE DEFAULT CAL:
                  ↵ RESTORE
ARE YOU SURE YOU WANT TO?
PRESS ➡ TO CONFIRM RESTORE

 RANGE  AVG  DIAGS ALARM
```

## Converter Filter Flow Calibration

The Converter Flow Sensor Calibration menu is used to calibrate the converter filter flow sensor to zero, span, or restore factory default values. The converter filter flow calibration is visible only when the instrument is in service mode. For more information on the service mode, see “Service Mode” earlier in the chapter.

**Note** This adjustment should only be performed by an instrument service technician. ▲

In the Main Menu, choose Service > **Cnv Filter Flow Cal**.

```
CONV FLOW SENSOR CAL:
>ZERO                  102
 SPAN               1.0000
 SET DEFAULTS

 RANGE  AVG   DIAGS ALARM
```

## Calibrate Converter Flow Zero

The Calibrate Converter Flow Zero screen calibrates the converter filter flow sensor at zero flow.

**Note** The pump must be disconnected before performing the zero calibration. ▲

In the Main Menu, choose Service > Cnv Filter Flow Cal > **Zero**.

```
CALIBRATE CNV FLOW ZERO:
 CURRENTLY:    0.000 LPM
    SET TO:    0.000 LPM ?

   DISCONNECT PUMP AND
   ↵ SAVE CURRENT FLOW

 RANGE  AVG   DIAGS ALARM
```

## Calibrate Converter Flow Span

The Calibrate Converter Flow Span screen allows the user to view and set the converter filter flow sensor calibrate span point.

**Note** An independent flow sensor is required to read the flow, then the operator enters the flow value on this screen to perform the calibration. ▲

In the Main Menu, choose Service > Cnv Filter Flow Cal > **Span**.

```
CALIBRATE CNV FLOW SPAN:
 CURRENTLY:    0.508 LPM
    SET TO:    0.508 LPM ?

          ←→ MOVE CURSOR
 ↑↓ CHANGE VALUE   ↵ SAVE

 RANGE  AVG   DIAGS ALARM
```

## Restore Default Flow Calibration

The Restore Default Flow Calibration screen allows the user to reset the configuration values to factory defaults.

In the Main Menu, choose Service > Cnv Filter Flow Cal > **Set Defaults**.

```
RESTORE DEFAULT CAL:
                ↵ RESTORE

 RANGE  AVG  DIAGS ALARM
```

```
RESTORE DEFAULT CAL:
                ↵ RESTORE
ARE YOU SURE YOU WANT TO?
PRESS ➡ TO CONFIRM RESTORE

 RANGE  AVG  DIAGS ALARM
```

## Input Board Test

The Input Board Test screen is used to manually view the input board gain. The input board test is visible only when the instrument is in service mode. For more information on the service mode, see “Service Mode” earlier in the chapter.

**Note** This adjustment should only be performed by an instrument service technician. ▲

In the Main Menu, choose Service > **Input Board Test**.

```
GAIN   1  - MANUAL:      ?
     FREQ = :    0

            ↔ CHG GAIN

 RANGE  AVG   DIAGS ALARM
```

## Analyzer Ambient Temperature Calibration

The Cal Analyzer Temp screen allows the user to view and set the analyzer ambient temperature sensor calibration. The analyzer ambient temperature sensor (thermistor) is located on the measurement interface board and measures the temperature within the analyzer enclosure (**Figure 7–15**). The temperature calibration is visible only when the instrument is in service mode. For more information on the service mode, see “Service Mode” earlier in the chapter.

**Note** Wait at least 30 seconds for the reading to stabilize before saving the value in the pressure, flow, and temperature screens. ▲

**Note** This adjustment should only be performed by an instrument service technician. ▲

In the Main Menu, choose Service > **Analyzer Ambnt Temp Cal**.

```
CAL ANALYZER AMBIENT TEMP:
 CURRENTLY:       30.0 °C
    SET TO:       25.0 °C?

          ⇔ MOVE CURSOR
 ⇑⇓ CHANGE VALUE   ↵ SAVE

 RANGE  AVG   DIAGS ALARM
```

## Converter Ambient Temperature Calibration

The Cal Conv Ambient Temp screen allows the user to view and set the converter external temperature sensor calibration. The converter external temperature sensor plugs into the converter rear panel EXTERNAL TEMP connector. The sensor end of this thermocouple is typically located outside the shelter close to sample inlet. The temperature calibration is visible only when the instrument is in service mode. For more information on the service mode, see “Service Mode” earlier in the chapter.

**Note** This adjustment should only be performed by an instrument service technician. ▲

In the Main Menu, choose Service > **Cnv Ambnt Temp Cal**.

```
CAL CONV AMBIENT TEMP:
 CURRENTLY:       30.0 °C
    SET TO:       25.0 °C?

          ⇔ MOVE CURSOR
 ⇑⇓ CHANGE VALUE   ↵ SAVE

 RANGE  AVG   DIAGS ALARM
```

## Analog Output Calibration

The Analog Output Calibration menu is a selection of analog output to calibrate, and allows the user to select the calibration action zero or span. The analog output calibration is visible only when the instrument is in

service mode. For more information on the service mode, see “Service Mode” earlier in the chapter.

**Notes** This adjustment should only be performed by an instrument service technician. ▲

Current channels are visible only if the I/O expansion board is installed. ▲

In the Main Menu, choose Service > Analog Output Calibration > **Voltage Channel 1-6** or **Current Channel 1-6**.

```
ANALOG OUTPUT CAL:
>VOLTAGE CHANNEL 1
 VOLTAGE CHANNEL 2
 VOLTAGE CHANNEL 3
 VOLTAGE CHANNEL 4
 VOLTAGE CHANNEL 5
 VOLTAGE CHANNEL 6
 CURRENT CHANNEL 1        ↓

 RANGE  AVG   DIAGS ALARM
```

```
ANALOG OUTPUT CAL:
>CALIBRATE ZERO
 CALIBRATE FULL SCALE

 RANGE  AVG   DIAGS ALARM
```

```
CURRENT CHANNEL 2
CURRENT CHANNEL 3
CURRENT CHANNEL 4
CURRENT CHANNEL 5
CURRENT CHANNEL 6
```

## Analog Output Calibrate Zero

The Analog Output Calibrate Zero screen allows the user to calibrate the zero state of the selected analog output. The operator must connect a meter to the output and adjust the output until it reads 0.0 V on the meter.

In the Main Menu, choose Service > Analog Output Calibration > Selected Channel > **Calibrate Zero**.

```
ANALOG OUTPUT CAL:    ZERO
 CONNECT METER TO OUTPUT!
  SELECTED OUTPUT:     C6
    SET TO:           350
 ↵ SAVE VALUE   ↑↓ INC/DEC
 SET OUTPUT TO: 0 or 4 mA

 RANGE  AVG   DIAGS ALARM
```

### Analog Output Calibrate Full-Scale

The Analog Output Calibrate Full-Scale screen allows the user to calibrate the full-scale state of the selected analog output. The operator must connect a meter to the output and adjust output until it reads the value shown in the set output to: field.

In the Main Menu, choose Service > Analog Output Calibration > Selected Channel > **Calibrate Full Scale**.

```
ANALOG OUTPUT CAL:    SPAN
 CONNECT METER TO OUTPUT!
  SELECTED OUTPUT:     V1
    SET TO:          3697
 ↵ SAVE VALUE   ↑↓ INC/DEC
 SET OUTPUT TO:       10 V

 RANGE   AVG    DIAGS ALARM
```

## Analog Input Calibration

The Analog Input Calibration menu is a selection of analog input to calibrate, and allows the user to select the calibration action zero or span. The analog input calibration is visible only when the instrument is in service mode. For more information on the service mode, see “Service Mode” earlier in the chapter.

**Notes** This screen is present only when the I/O expansion board is installed. ▲

This adjustment should only be performed by an instrument service technician. ▲

In the Main Menu, choose Service > Analog Input Calibration > **Input Channel 1-8**.

```
ANALOG INPUT CAL:
>INPUT CHANNEL 1
 INPUT CHANNEL 2
 INPUT CHANNEL 3
 INPUT CHANNEL 4
 INPUT CHANNEL 5
 INPUT CHANNEL 6
 INPUT CHANNEL 7        ↓

 RANGE   AVG    DIAGS ALARM
```

```
ANALOG INPUT CAL:
>CALIBRATE ZERO
 CALIBRATE FULL SCALE

 RANGE   AVG    DIAGS ALARM
```

```
INPUT CHANNEL 8
```

### Analog Input Calibration Zero

The Analog Input Calibrate Zero screen allows the user to calibrate the zero state of the selected analog input.

In the Main Menu, choose Service > Analog Input Calibration > Select Channel > **Calibrate Zero**. (Hook up a voltage source of 0 V to the analog input channel.)

```
ANALOG INPUT CAL:    ZERO
DISCONNECT SELECTED INPUT!
 SELECTED INPUT:    INPUT 1
 CURRENTLY:        0.00 V ?

 ↵ CALIBRATE INPUT TO ZERO

 RANGE  AVG   DIAGS ALARM
```

### Analog Input Calibrate Full-Scale

The Analog Input Calibration Full-Scale screen allows the user to calibrate the full-scale state of the selected analog input.

In the Main Menu, choose Service > Analog Input Calibration > Select Channel > **Calibrate Full Scale**. (Hook up a voltage source of 10 V to the analog input channel.)

```
ANALOG INPUT CAL:     SPAN
PROVIDE VOLTAGE TO INPUT!
 SELECTED INPUT:    INPUT 1
 CURRENTLY:        9.80 V
    SET TO:       10.00 V ?
     ↵ CALIBRATE TO VALUE

 RANGE  AVG   DIAGS ALARM
```

## Permeation Oven Settings

The Permeation Oven Settings menu is used for setting up and calibrating the permeation oven option. The permeation oven settings menu is visible only when the instrument is in service mode. For more information on the service mode, see “Service Mode” earlier in the chapter.

**Note** This adjustment should only be performed by an instrument service technician. ▲

In the Main Menu, choose Service > **Perm Oven Settings**.

```
PERM OVEN SETTINGS:
>CAL GAS THERMISTOR
 CAL OVEN THERMISTOR
 PERM OVEN SELECTION
 FACTORY CAL GAS THERM
 FACTORY CAL OVEN THERM


 RANGE  AVG   DIAGS ALARM
```

## Calibrate Gas Thermistor

The Calibrate Gas Thermistor submenu is used for calibrating the permeation oven gas thermistor using a water bath or known resistance.

In the Main Menu, choose Service > Perm Oven Settings > Cal Gas Thermistor > **Water Bath** or **Known Resistor**.

```
CALIBRATE GAS THERMISTOR:
>WATER BATH
 KNOWN RESISTOR


 RANGE  AVE   DIAGS ALARM
```

## Water Bath

The Calibrate Gas Thermistor Water Bath screen allows the user to view and set the permeation oven gas temperature to a known temperature value.

```
CAL GAS THERM (BATH):
 CURRENTLY:      45.80 °C
    SET TO:      45.00 °C

       ↔ MOVE CURSOR
 ↑↓ CHANGE VALUE   ↵ SAVE

 RANGE  AVG   DIAGS ALARM
```

## Resistor

The Calibrate Gas Thermistor Resistance screen allows the user to view and set the permeation oven gas thermistor resistance to a known resistor value.

```
CAL GAS THERM (RESISTOR):
 CURRENTLY:     3850 Ohms
   SET TO :     04003 Ohms

          ↔ MOVE CURSOR
 ↑↓ CHANGE VALUE   ↵ SAVE

 RANGE  AVG   DIAGS ALARM
```

## Calibrate Oven Thermistor

The Calibrate Oven Thermistor menu is used to view and set the permeation oven thermistor resistance to a known resistor value.

In the Main Menu, choose Service > Perm Oven Settings > **Cal Oven Thermistor**.

```
CAL OVEN THERM (RESISTOR):
 CURRENTLY:     3850 Ohms
   SET TO :     04003 Ohms

          ↔ MOVE CURSOR
 ↑↓ CHANGE VALUE   ↵ SAVE

 RANGE  AVG   DIAGS ALARM
```

## Permeation Oven Setpoint

The Permeation Oven Setpoint screen is used to select the permeation oven state to not present, or the desired temperature choice of 30, 35, and 45 °C.

In the Main Menu, choose Service > Perm Oven Settings > **Perm Oven Selection**.

```
PERM OVEN SETPOINT:
 CURRENTLY:  NOT PRESENT
    SET TO:        45 ℃ ?

          ↑↓ CHANGE VALUE
           ↵ SAVE VALUE

 RANGE  AVG   DIAGS ALARM
```

## Factory Calibrate Gas Thermistor

The Factory Calibrate Gas Thermistor submenu is used for calibrating the permeation oven gas thermistor to either low point, high point, or set defaults.

In the Main Menu, choose Service > Perm Oven Settings > **Factory Cal Gas Therm**.

```
FACTORY CAL OVEN THERM:
>LOW POINT
 HIGH POINT
 SET DEFAULTS

 RANGE  AVE   DIAGS ALARM
```

## Low and High Points

The Calibrate Gas Thermistor Low Point screen allows the user to view and set the permeation oven thermistor resistance. The low and high point screens function the same way.

In the Main Menu, choose Service > Perm Oven Settings > Factory Cal Gas Therm > **Low Point**.

```
CAL GAS THERM LOW POINT:
 CURRENTLY:      3850 Ohms
    SET TO:     04000 Ohms

          ↔ MOVE CURSOR
 ↑↓ CHANGE VALUE   ↵ SAVE

 RANGE  AVG   DIAGS ALARM
```

## Set defaults

The Set Defaults screen allows the user to reset the configuration values to factory defaults.

In the Main Menu, choose Service > Perm Oven Settings > Factory Cal Gas Therm > **Set Defaults**.

```
RESTORE DEFAULT SETTINGS:
 FOR PERM OVEN GAS THERM
                ↵ RESTORE

ARE YOU SURE YOU WANT TO?
PRESS → TO CONFIRM RESTORE

 RANGE  AVG   DIAGS ALARM
```

## Factory Calibrate Oven Thermistor

The Factory Calibrate Oven Thermistor submenu is used for calibrating the permeation oven heater thermistor to either the low point, high point, or set defaults.

In the Main Menu, choose Service > Perm Oven Settings > **Factory Cal Oven Therm**.

```
FACTORY CAL OVEN THERM:
>LOW POINT
 HIGH POINT
 SET DEFAULTS



 RANGE  AVE   DIAGS ALARM
```

## Low and High Points

The Calibrate Oven Thermistor Low Point screen allows the user to view and set the permeation oven thermistor resistance. The low and high point screens function the same way.

In the Main Menu, choose Service > Perm Oven Settings > Factory Cal Oven Therm > **Low Point**.

```
CAL OVEN THERM LOW POINT:
 CURRENTLY:      3850 Ohms
    SET TO:     04003 Ohms

          ←→ MOVE CURSOR
 ↑↓ CHANGE VALUE    ↵ SAVE

 RANGE  AVG   DIAGS ALARM
```

## Set defaults

The Set Defaults screen allows the user to reset the configuration values to factory defaults.

In the Main Menu, choose Service > Perm Oven Settings > Factory Cal Oven Therm > **Set Defaults**.

```
RESTORE DEFAULT SETTINGS:
 FOR PERM OVEN HTR THERM
                  ↵ RESTORE

ARE YOU SURE YOU WANT TO?
PRESS ➡ TO CONFIRM RESTORE

 RANGE   AVG    DIAGS ALARM
```

## Display Pixel Test

The Display Pixel Test is used to test the LCD display. The display pixel test screen is visible only when the instrument is in service mode. For more information on the service mode, see “Service Mode” earlier in the chapter.

In the Main Menu, choose Service > **Display Pixel Test**.

```
DISPLAY PIXEL TEST:
DURING TEST PRESS ⧉ OR ▶
TO EXIT, ↵ TO TOGGLE

         ↵ BEGIN TEST
         ⧉ GO BACK TO MENU

 RANGE   AVG    DIAGS ALARM
```

## Restore User Defaults

The Restore User Defaults screen is used to reset the user calibration and configuration values to factory defaults. The restore default user is visible only when the instrument is in service mode. For more information on the service mode, see “Service Mode” earlier in the chapter.

In the Main Menu, choose Service > **Restore User Defaults.**

```
RESTORE USER DEFAULTS:

                  ↵ RESTORE


 RANGE   AVG   DIAGS ALARM
```

```
RESTORE USER DEFAULTS:

                  ↵ RESTORE
ARE YOU SURE YOU WANT TO?
PRESS ➡ TO CONFIRM RESTORE

 RANGE   AVG   DIAGS ALARM
```

## Password

The Password menu allows the user to configure password protection. If the instrument is locked, none of the settings can be changed via the front panel user interface. The password (lock) icon on the right side of the status bar indicates that the password lock is active. The items visible under the password menu are determined by the instrument's password status.

In the Main Menu, choose **Password**.

```
PASSWORD MENU:
>SET PASSWORD
 LOCK INSTRUMENT
 CHANGE PASSWORD
 REMOVE PASSWORD
 UNLOCK INSTRUMENT


 RANGE  AVG  DIAGS ALARM
```

## Set Password

The Set Password screen is used to set the password to unlock the front panel. The set password is shown if the instrument is unlocked and the password is set.

In the Main Menu, choose Password > **Set Password**.

```
ENTER NEW PASSWORD:
            ■

     ABCDEFGHIJKLMN  BKSP
     OPQRSTUVWXYZ    PAGE
     0123456789 ./-  SAVE

 RANGE  AVG  DIAGS ALARM
```

## Lock Instrument

The Lock Instrument screen is used to lock the instrument's front panel so users can not change any settings from the front panel. The lock instrument screen is shown if the instrument is unlocked and the password is set.

### Lock/Unlock and Local/Remote Operation

If the instrument keyboard is locked via the front panel using Password > Lock Instrument > Lock Front Panel, the instrument reports being in Remote mode. In this mode, the keypad is locked, data can be viewed but

not changed using the front panel interface, and the remote “Set” commands are active.

If the instrument keyboard is unlocked via the front panel using Password > Unlock Instrument > Enter The Password, the instrument reports being in Local mode, the front panel interface is unlocked, and data can be changed from the front panel. In this mode the instrument does not process the remote “Set” commands.

Refer to “C-Link Protocol Commands” appendix for detailed information about “mode,” “allow mode,” and “power up mode” commands.

In the Main Menu, choose Password > **Lock Instrument**.

```
LOCK FRONT PANEL:
   PRESSING ENTER WILL
PREVENT USER FROM CHANGING
 CONFIG FROM FRONT PANEL
 ↵ LOCK AND RETURN TO RUN

 RANGE  AVG  DIAGS ALARM
```

## Change Password

The Change Password is used to set or change the password used to unlock the instrument’s front panel. The change password screen is shown if the instrument is unlocked.

In the Main Menu, choose Password > **Change Password**.

```
ENTER NEW PASSWORD:
      ABCDEFGHIJKLMN  BKSP
      OPQRSTUVWXYZ    PAGE
      0123456789 ./-  SAVE

 RANGE  AVG   DIAGS ALARM
```

## Remove Password

The Remove Password screen is used to erase the current password and disable password protection. The remove password screen is shown if the instrument is unlocked and the password set.

In the Main Menu, choose Password > **Remove Password**.

```
REMOVE PASSWORD:
   PRESSING ENTER WILL
 REMOVE CURRENT PASSWORD
   AND DISABLE LOCKING
       ↵ REMOVE PASSWORD

 RANGE  AVG   DIAGS ALARM
```

## Unlock Instrument

The Unlock Instrument screen is used to enter the password to unlock the front panel. The unlock instrument is shown if the instrument is locked.

In the Main Menu, choose Password > **Unlock Instrument**.

```
ENTER THE PASSWORD:
          ■

     ■BCDEFGHIJKLMN  BKSP
     OPQRSTUVWXYZ    PAGE
     0123456789 ./-  SAVE

 RANGE  AVG  DIAGS ALARM
```

# Chapter 4
# Calibration

The Model 5020*i* requires initial and periodic calibration according to the procedures described in this chapter. Calibration is achieved by first introducing $SO_2$ free "zero air" to establish the detector's baseline, and then introducing span gas containing a known concentration of $SO_2$. By comparing the detector response to zero air with the detector response to the span gas, the relationship between $SO_2$ concentration and detector signal can be established. Because the range of sulfate concentrations found in ambient air is relatively narrow, and because the detector response has been shown to be linear, a reliable calibration can be established for this analyzer using zero air and just one span point.

Once the instrument has been installed and the initial calibration has been completed, it is recommended that the calibration should be adjusted, or at least checked, once each day until the required stability has been demonstrated. As discussed in Chapter 3, and later in this chapter, the instrument software includes the capability of scheduling automated calibration checks or adjustments if the supporting hardware is available.

In addition to daily calibration checks, it is also recommended that the standard operating procedures should include an on-going quality control plan that allows the frequency of calibration to be modified depending on historical calibration and/or zero and span check data. A quality control program is essential to ascertain the accuracy and reliability of the air quality data collected. The data compiled for such a program might include items such as dates of calibration, atmospheric conditions, control settings and other pertinent data. The *Quality Assurance Handbook for Air Pollution Measurement Systems*, published by the U.S. EPA, Research Triangle Park, NC, 27711, can be consulted for detailed quality assurance guidelines.

Perform the following steps prior to the initial calibration.

1. Allow at least 60 minutes for the analyzer module to warm up and stabilize.

2. Complete any adjustments to instrument operating parameters, such as photo multiplier tube (PMT) voltage.

**Note** If the analyzer's operating parameters are adjusted after calibration, that calibration may no longer be valid. ▲

3. Connect the data recording devices and any other electrical I/O that will be used during normal monitoring operations.

4. Perform a leak test. Refer to "System Leak Testing" on page 5-10 for details.

## Connecting Calibration Gases

The analyzer module is typically calibrated independently of the converter. Depending on the design of the gas delivery system, calibration gases can be introduced directly through the SAMPLE bulkhead on the analyzer module, or they can be introduced through the rear panel bulkheads labelled ZERO and SPAN. In either case, the calibration gases must be supplied to the instrument at atmospheric pressure.

The calibration gas flows and plumbing arrangement are illustrated in **Figure 4–1** and **Figure 4–2**.

**Note** If calibration gases will be introduced through the SAMPLE port rather than the ZERO and SPAN ports, the internal values must be disabled by unplugging the connectors labelled Z/S and SPAN on the interface board (mounted on the divider panel). ▲

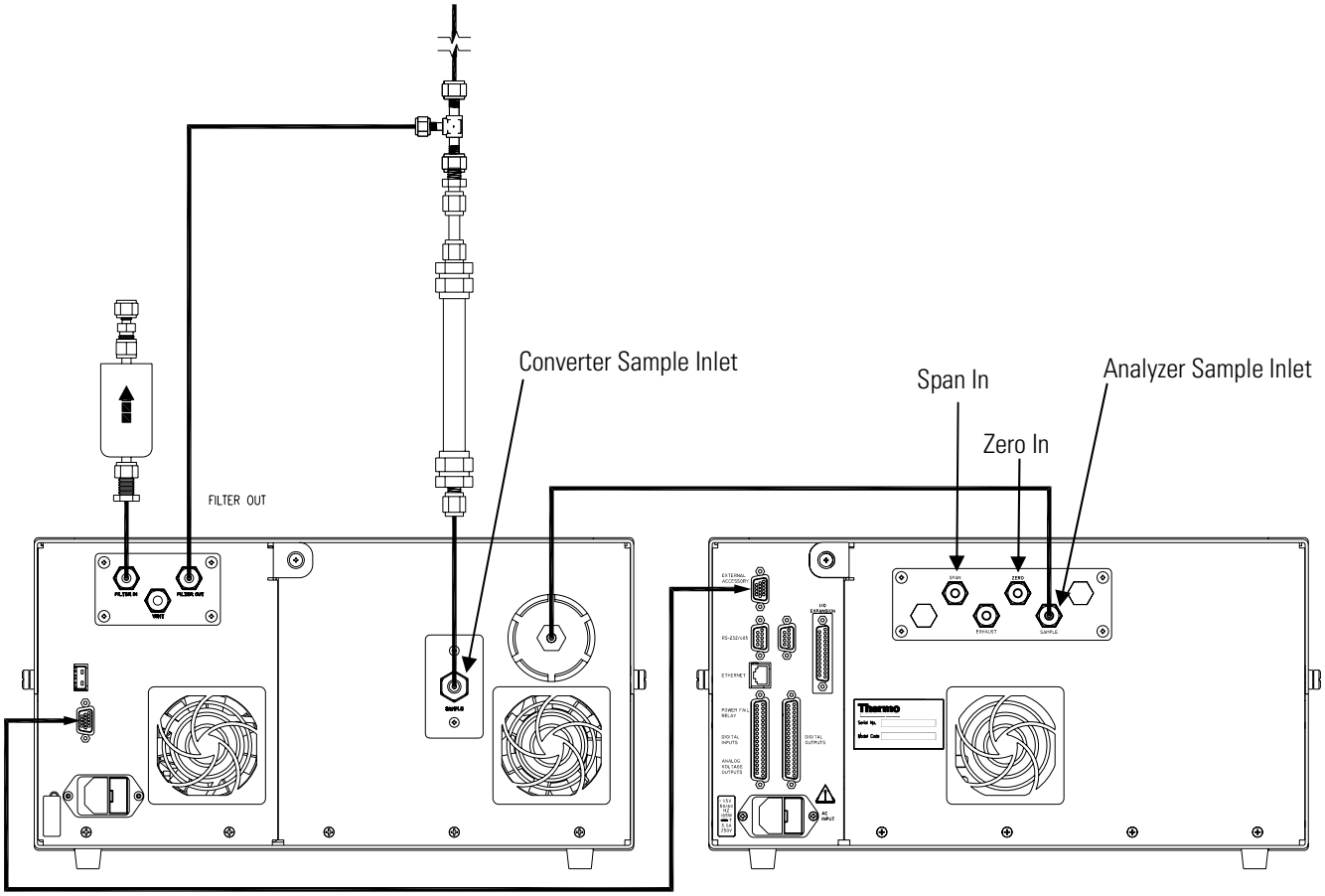


**Figure 4–1.** Rear Panel Calibration Plumbing Connections

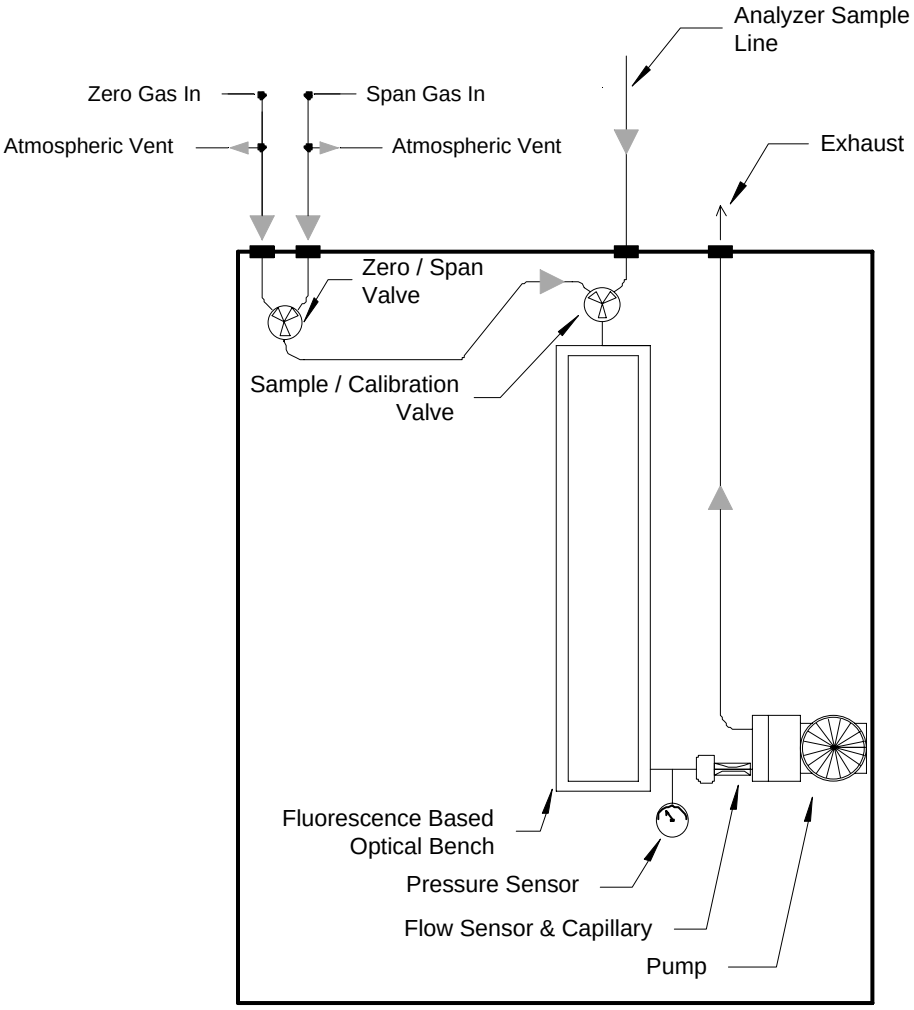


**Figure 4–2.** Calibration Gas Flows

**Note** Calibration gases must be supplied to the instrument at atmospheric pressure whether introduced through the SAMPLE port or through the ZERO and SPAN bulkheads. ▲

## Zero Air Generation

Proper calibration of the Model 5020*i* analyzer requires a source of $SO_2$-free "zero air" that can be used to establish the instrument zero and can also be used to dynamically dilute stock span gas down to an appropriate concentration for calibration.

Although the actual sulfate measurement is based on a comparison of the signal created by filtered and unfiltered air streams, it is important to monitor the analyzer's "zero-background" using high quality zero-air. Due to the low $SO_2$ concentrations that are being measured, the quality of the zero air is a critical consideration. If the zero air used for dilution of the stock span gas and for establishing baseline operating conditions has impurity levels greater than a few tenths of a ppb, the accuracy of the analyzer being calibrated may be jeopardized. While this is a critical consideration, it has been demonstrated that acceptable zero air can be readily generated by several different methods.

### Ultra-Zero Grade Cylinders

Ultra-zero grade ambient monitoring gases are available from scientific gas suppliers. Typically, gas suppliers only guarantee that $SO_2$ concentrations will be below 5 ppb. In practice however, Thermo Fisher Scientific personnel and other users of trace level air monitoring equipment have found these gases to be at least an order of magnitude better than what is guaranteed. Therefore, ultra-zero grade cylinders obtained from a reputable scientific gas supplier are usually adequate for use as zero-air. If these cylinders are used, be sure to equip them with non-reactive and diffusion resistant regulators. Also, be aware that as the cylinder pressure falls below 500 psig, the integrity of the zero gas becomes more questionable.

### Commercial Heatless Air Dryers

Commercial heatless air dryers filled with a mixed bed of activated charcoal and a 13X molecular sieve have been found effective in removing $SO_2$ from compressed air. The use of this type of zero gas system is recommended when minimum maintenance is of prime importance. This system requires a source of compressed air. Refer to the manufacturer's recommendations for installation of such a system.

### Absorbing Column

An absorbing column packed with activated charcoal is acceptable for scrubbing $SO_2$ from ambient air. Ambient air is forced through a laboratory gas absorption column packed with the charcoal and the $SO_2$ is removed to acceptable levels. The charcoal should be changed at a

minimum of every 6 months. It may be necessary to change the charcoal more frequently depending on usage and local conditions.

## Commercial Zero Air Generators

Rather than relying on the zero air sources described above, Thermo Fisher Scientific's in-house laboratories routinely use zero air generated by commercial zero air generators, such as the Thermo Fisher Scientific Model 1160 that combine compression, chemical scrubbing and reaction into one self-contained device. Ambient air that has been compressed and pressurized to give an output of about 35 psig or greater is dried by passing the air through a heatless air dryer or membrane drier and then sent through a series of chemical reactors and/or scrubbers. Normally the scrubbers include indicating silica gel or Dry-Rite to remove traces of water, Purafil, activated charcoal, and a fine (5 micron) particulate filter.

If a zero air generator of this type will be used, the operator should be aware that optimal performance might not be achieved until the generator has been run for 24 to 48 hours. This occurs because the impurities, such as NOx and $SO_2$, can desorb from the chemical reactors during the initial operation. However, after 24 to 48 hours of continuous operation, impurity levels will generally fall and stabilize below detection limits for trace level analyzers. When using this type of zero air source, it is critical to always maintain some minimal flow through the system. If flow is interrupted, even for a short period, a reconditioning time of up to 24 hours may be required.

## Span Gas Generation

The Model 5020*i* analyzer should be spanned using $SO_2$ in air. A calibration system that is capable of providing stable and accurate $SO_2$ concentrations and a flow rate of at least 0.8 LPM is required.

Because the instrument response curve is linear, the internal software allows only a single span point. If a multi-point calibration is desired, the data is typically recorded from the analog output and the final data reduction, or interpretation, is performed by an external data system.

If a single point calibration will be used, the optimal span gas concentration would be between 5 and 10 ppb. However, if the calibration system cannot reliably produce $SO_2$ standards at such a low concentration, a span gas concentration of up to 40 ppb is acceptable. If an external multipoint calibration curve will be used, a set of 3 to 5 span points ranging between 10 and 80 ppb will be sufficient.

Sulfur dioxide calibration standards that are certified as traceable to a NIST primary standard are readily available at concentrations between 1 and 10 ppm. These working standards are provided in specially treated cylinders and have been shown to have excellent stability and accuracy.

NIST traceable mass flow controllers with full-scale ranges from 20 sccm to 20,000 sccm are also readily available. It is therefore relatively straightforward to generate span gas concentrations from 1 ppb to 100 ppb, assuming a suitable zero gas source is used. For example:

$$[SO_2]\text{Generated} = [SO_2]\text{Span X } (SO_2 \text{ Flow / Total Flow})$$

Assuming a calibration cylinder of 1 ppm, $SO_2$ flow of 10 sccm, and a total flow of 1000 sccm, a span concentration of 10 ppb can be generated. Using the specifications of the mass flow controllers and calibration cylinder, this concentration should be accurate to within 5%. Thermo Fisher Scientific's Model 146 Multigas Calibration System is one example of a commercial system that is designed for this type of precision dilution.

In conclusion, tests by the United States Environmental Protection Agency, Tennessee Valley Authority, Battelle National Labs, and Thermo Fisher Scientific's engineering department have demonstrated that trace level analyzers are readily calibrated at the low concentration levels required for ambient monitoring of sulfate. Although extra care is required, primarily in zero air generation, users familiar with normal compliance requirements should be able to obtain valid concentration data with minimal additional effort.

## Calibration Procedure

**Note** The manual calibration procedure described here assumes that the calibration gases will be introduced through the analyser's SAMPLE port. If the ZERO and SPAN ports are being used, be sure to open the appropriate valves using the [➡] pushbutton as indicated on the analyzer screen. If gases are being introduced through the SAMPLE port, **DO NOT** switch the instrument to zero or span since that will open the internal valves. ▲

At the time of this writing, sulfate is not classified by the US EPA as a priority pollutant and there are no regulations concerning calibration frequency or procedures. However, regulations that apply to ambient monitoring programs for priority pollutants, such as ozone may provide guidance. These regulations require calibration when the instrument is newly installed, moved, repaired, interrupted for more than a few days, or when span or zero shift by more than 15%. Thermo Fisher Scientific suggests that these procedures should also be included as part of the standard operating procedure and quality assurance program for the Model 5020*i*.

The Model 5020*i* firmware allows the instrument to be calibrated through manual, automated or semi-automated procedures. In order to determine which is the most convenient method for a given installation, the terminology used in the menu system and the software algorithms used in calibration will be defined.

The first step in calibration is to determine the magnitude of the signal that the detector outputs when there is no $SO_2$ present. This signal, which is referred to as the zero signal in this manual, originates primarily from scattered light hitting the PMT, from electrical noise, and from other random sources. Note that in some other instrument manuals, the zero-signal is sometimes called the background. We avoid use of the term background here because it may lead to confusion between the zero signal obtained with true zero air and the background signal obtained with filtered ambient air. Once the zero signal has been measured, it is saved in the instrument memory as the "zero-offset." As will be discussed below, during routine measurement, the zero-offset is subtracted from the detector signal, leaving only that portion of the signal that can be attributed to $SO_2$ in the sample.

Once the instrument's zero signal has been determined, span gas containing a known concentration of $SO_2$ is introduced. The estimated $SO_2$ concentration is then automatically calculated by subtracting the zero offset from the span signal and multiplying that difference by a fixed constant. This constant is established experimentally at the factory and is an expression of detector sensitivity for a typical instrument of this design.

The final calibration step is calculation of the span coefficient. The coefficient is a ratio that can be applied to the estimated concentration reading described in the previous paragraph to give the actual span gas concentration. A span coefficient that is less than 1.00 would suggest that the instrument signal is slightly stronger than expected for a given $SO_2$ concentration and a span coefficient that is greater than 1.00 would suggest a signal that slightly weaker than expected for a given $SO_2$ concentration.

When considering the span coefficient, the operator should be aware that analytical performance is dependent on the signal to noise ratio, not just signal strength. Even though a span coefficient of greater than 1.00 suggests that the sensitivity may be less than average, it does not necessarily indicate sub-standard analytical performance. While the absolute value of the span coefficient is not tremendously important, a span coefficient that changes significantly over time may suggest that service is required.

Once the zero signal and the span coefficient have been determined, a given detector signal can be converted to an $SO_2$ concentration using the following formula:

$$[SO_2] = (\text{Detector_Signal} - \text{Zero_Offset}) \text{ X } (\text{Calibration_Factor}) \text{ X } (\text{Span Coefficient})$$

As noted earlier, the relationship between detector signal and $SO_2$ concentration has been demonstrated to be linear. Therefore, measurement of the zero signal and the detector signal at one span point is

sufficient to allow accurate $SO_2$ measurement over the entire operating range of this instrument.

## Manual Calibration

When performing a manual calibration, the instrument sample inlet is first connected to a zero air supply and the instrument's zero-offset value is manually adjusted so the instrument reads zero. The sample inlet is then connected to the span source and the span coefficient is adjusted up or down so that the instrument displays the correct $SO_2$ concentration. Note that during a manual calibration, the internal zero and span valves are not activated, and that the calibration gases must be introduced directly at the back of the analyzer sample inlet rather than through the ZERO and SPAN bulkheads. In order to avoid pressurizing the fluorescence cell, the calibration gases must be supplied to the instrument at atmospheric pressure. Depending on the design of the calibration gas system, it may be necessary to employ an atmospheric bypass plumbing arrangement as shown in **Figure 2–8**.

Use the following procedure to perform a manual calibration.

1. If zero and span sources are not attached to the dedicated fittings, remove the line connecting the converter output to the analyzer input at the rear panel of the analyzer and connect a source of $SO_2$-free zero air to the analyzer. The zero air supply should be adjusted to provide enough flow to ensure that the analyzer pump requirement of around 500 cc per minute is met.

2. From the Main Menu, select Calibration Factors, scroll down to SO2 BKG and then press [↵].

   The instrument display will appear as shown in the figure below.

```
SO2 BACKGROUND:
        SO2:          1.49
 SET BKG TO:           0.0 ?
            ➡ OPEN VALVE
            ⬆⬇ INC/DEC
             ↵ SAVE VALUE

 RANGE  AVG   DIAGS ALARM
```

3. If using the zero and span valves, press [➡] to open the appropriate solenoid.

4. Allow the instrument to stabilize for at least 15 minutes, or until the reading does not appear to be changing.

5. Press [↑] or [↓] to adjust the instrument's $SO_2$ reading to 0.00.

6. Press [↵] to lock-in the new instrument zero. The instrument zero is expected to have a value of 4 ppb or less and this value should be recorded for future reference. Note that if the instrument zero is significantly higher than that entered at the factory, it may indicate that the zero air is contaminated with $SO_2$ or other interferents.

7. If calibrating through the SAMPLE port, switch the input from zero-air to span gas containing a known concentration of $SO_2$, preferably in the range of 5 to 10 ppb, and again check that the flow rate is adjusted to meet the internal pump's demand.

8. Press [■] to return to the Calibration Factors menu and then select SO2 COEF.

   The screen shown in the following figure should now appear on the display.

9. If calibrating through the ZERO and SPAN ports, press [→] to open the appropriate valves.

```
SO2 COEFFICIENT:
        SO2:        TOO LOW
 SET COEF TO:         1.000
            → OPEN VALVE
           ↑↓ INC/DEC
            ↵ SAVE VALUE

 RANGE   AVG    DIAGS ALARM
```

10. Wait for at least 15 minutes or for as long as necessary for the instrument reading to stabilize.

11. Press [↑] or [↓] to adjust the Span Coefficient until the $SO_2$ concentration reading is correct.

12. Press [↵] to lock-in the new value.

13. Record the new Span Coefficient for future reference. The absolute value of the span coefficient is not very important, however, it should be recorded so changes in instrument performance can be tracked. If the Span Coefficient is significantly greater or less than the value entered at the factory, it may indicate a problem with the span gas and/or dilution system.

14. If necessary, disconnect the calibration gas system from the analyzer rear panel and reconnect the analyzer's SAMPLE port to the converter module.

**Note** It is suggested that the initial calibration be performed using manual procedures so that the zero reading and span coefficient can be recorded. Once the initial calibration has been established, routine calibrations or calibration checks can more easily be performed using one of the automated methods. ▲

## Semi-Automated Calibration

The Model 5020*i* calibration factors can also be adjusted automatically using commands that are accessible from the front panel. These commands, which are available under the Calibration menu include:

Cal $SO_2$ Background

Cal $SO_2$ Coefficient

Calibrate Pressure

Zero/Span Check

When either of the first two commands is selected, the processor will automatically adjust the zero signal and the span coefficient. As expected, the Cal $SO_2$ Background command only changes the instrument's zero offset and the Cal $SO_2$ Coefficient command only changes the span coefficient.

Before using these commands, be sure that the necessary calibration gases are connected to the ZERO and SPAN inlets on the back of the analyzer as shown earlier in this chapter, and if the internal solenoids are being used, be sure that the appropriate one is activated. The lines must be vented to the atmosphere as in **Figure 4–1**. Systematic procedures for each calibration function are presented below. Note that the gas cylinders should be shut OFF after calibration to avoid emptying the cylinders to the atmosphere.

## Zero Adjust

Use the following procedure to perform a zero adjust.

1. From the instrument Main Menu, select **Calibration**.
2. If necessary, move the cursor to Cal $SO_2$ Background and press [↵].

```
SO2 BACKGROUND:
        SO2:          0.00
 CURRENTLY:           0.00 ?
          ➡ OPEN VALVE
        ↵ SET SO2 TO ZERO

 RANGE   AVG    DIAGS ALARM
```

3. Press [➡] to open the appropriate valves.
4. Allow the instrument to stabilize for at least 15 minutes or until the reading does not appear to be changing.
5. Press [↵] and the processor will automatically adjust the zero-offset value to give an instrument reading of 0.00.
6. Press [■] to return to the Calibration menu.

## Span Adjust

Use the following procedure to perform a span adjust.

1. From the Main Menu, select **Calibration**.
2. Move the cursor to Cal $SO_2$ Coefficient and press [↵].

```
CALIBRATE SO2:
        SO2:          0.00
 SPAN CONC:      00008.03 ?

          ➡ OPEN VALVE

 RANGE   AVG    DIAGS ALARM
```

3. If the span concentration does not match the concentration you are using, edit the value as needed.

4. Allow the instrument to stabilize for at least 15 minutes or until the reading does not appear to be changing.

5. Press [↵] and the processor will automatically adjust the span coefficient to give the instrument reading that was entered in Step 3.

6. Press [■] to return to the Calibration menu.

## Fully Automated Zero and Span Checks

In addition to the calibration procedures described earlier, the Model 5020*i* also includes fully automated procedures that can be programmed to either adjust or check the analyzer calibration on a routine basis. Calibration checks can be scheduled to occur at the same time each day, however, to implement this function, the zero and span gas supply system must be capable of turning the gas flows on and off on a signal from the 5020*i* I/O system.

For additional information about automated zero and span checks, refer to the "Zero/Span Check Menu" on page 3-19.

# Chapter 5
# Preventive Maintenance

This chapter describes the periodic maintenance procedures that should be performed on the instrument to ensure proper operation. Routine maintenance procedures are broken into three categories; those performed at two-month intervals, those performed at six-month intervals and those performed on an annual basis.

## Two-Month Maintenance

The two-month maintenance activities include changing the denuder, checking a few key diagnostic parameters and checking the sample flow path for leaks. If no fault conditions are present, the instrument does not need to be shut down.

## Six-Month Maintenance

The six-month maintenance procedures require replacement of key components located in the converter module, including the converter core. Depending on the technician's experience with this system, the six-month maintenance will likely require four to six hours of hands-on work. In most cases, the new converter core will require a 12-hour burn-in period to stabilize, so the operator should plan to miss at least one full day of data collection.

In order to ensure data integrity, the six-month maintenance should also include replacement of the external HEPA filter, a system leak test, and a dynamic zero test. The leak test can be run while the new converter core is being burned-in. However the dynamic zero, which requires several hours or data collection, should only be run after the new core is fully burned-in and the instrument has stabilized.

# Annual Maintenance

The annual maintenance procedure is the same as the six-month maintenance, but with the addition of rebuilding the pumps in the analyzer and converter modules and replacing the HEPA filter located in the converter module.

**Table 5–1** provides a complete list of maintenance procedures and suggested intervals. The remainder of this chapter presents step-by-step instructions for specific maintenance and repair procedures.

**Table 5–1.** Recommended Maintenance Schedule

| Procedure | Suggested Interval | Parts / Supplies Needed |
|---|---|---|
| Visual Inspection and Cleaning | 2 Months | None |
| Lamp voltage check | 2 Months | None |
| Denuder cleaning / coating | 2 Months | Coating solution |
| Routine flow check | 2 Months | None |
| Complete leak test | 2 Months | None |
| Cleaning / inspecting fan filters | 6 Months | None |
| Capillary inspection | 6 Months | Glass capillaries |
| Converter core replacement | 6 Months | Converter core assembly<br>Replacement filter line |
| Converter thermocouple replacement | 6 Months | Thermocouple probes<br>(2 required) |
| Membrane filter replacement | 6 Months | 47 mm membrane filters |
| External HEPA filter replacement | 6 Months | External HEPA depth filter |
| Internal HEPA filter replacement | 12 Months | Internal HEPA depth filter |
| Dynamic Zero | 12 Months | External High Volume HEPA Filter |
| Pump rebuild | 12 Months | Pump repair kits (2 required) |

## Safety Precautions

Read the safety precautions before beginning any procedures in this chapter.

**WARNING** If the equipment is operated in a manner not specified by the manufacturer, the protection provided by the equipment may be impaired. Do not attempt to lift the instrument by the cover or other external fittings. ▲

**Equipment Damage** Some internal components can be damaged by small amounts of static electricity. A properly ground antistatic wrist strap must be worn while handling any internal component. If an antistatic wrist strap is not available, be sure to touch the instrument chassis before touching any internal components. When the instrument is unplugged, the chassis is not at earth ground. ▲

**Equipment Damage** Do not use solvents or other cleaning products to clean the outside case. ▲

**Equipment Damage** DO NOT attempt to clean the mirrors in the optical bench. These mirrors do not come in contact with the sample gas and should not be cleaned. Cleaning the mirrors can damage the mirrors. ▲

## Cleaning the Outside Case

Clean the outside case using a damp cloth being careful not to damage the labels on the case.

**Equipment Damage** Do not use solvents or other cleaning products to clean the outside case. ▲

## Visual Inspection and Cleaning

The instrument should be inspected occasionally for obvious visible defects, such as loose connectors, loose fittings, cracked or clogged Teflon® lines, and excessive dust or dirt accumulation. Dust and dirt can accumulate in the instrument and can cause overheating or component failure. Dirt on the components prevents efficient heat dissipation and may provide conducting paths for electricity. The best way to clean the inside of the instrument is to first carefully vacuum all accessible areas and then blow away the remaining dust with low pressure compressed air. Use a soft paint brush or cloth to remove stubborn dirt.

# Fan Filter Inspection and Cleaning

Under normal use, the filter over the instrument fan located on the rear panel of the instrument should be cleaned and reconditioned at six-month intervals. If the instrument is operated in excessively dirty surroundings, this procedure should be instituted on a more frequent schedule. Use the following procedure to inspect and clean the fan filter (**Figure 5–1**).

Equipment Required:

Fan

Fan filter

1. Remove the fan guard and filter from the rear of the instrument by unsnapping it.

2. Replace the filter as appropriate or flush the filter with warm water and let dry (a clean, oil-free purge will help the drying process) or blow the filter clean with compressed air.

3. Re-install the filter and fan guard.

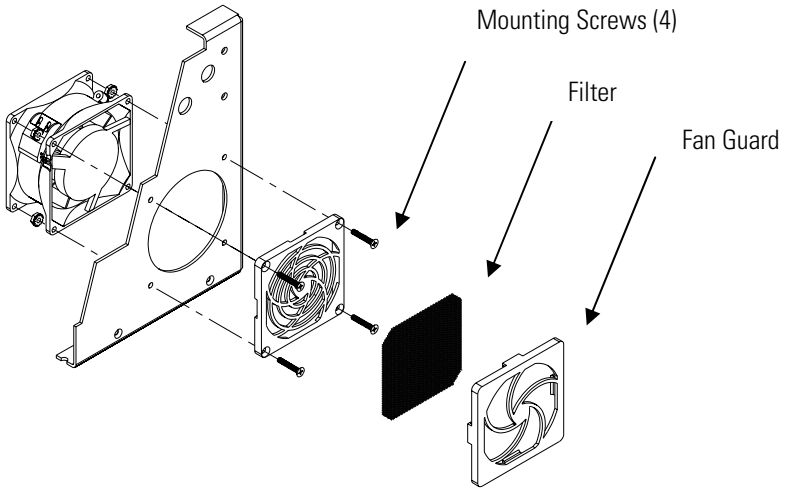


**Figure 5–1.** Inspecting and Cleaning the Fan

## Lamp Voltage Check

The Model 5020*i* is equipped with a lamp voltage control circuit, which automatically corrects for the degradation of the flash lamp with age. After extended use, the lamp may have degraded to the point where it is being driven with the maximum voltage (1200 V) that the power supply can deliver. Although the software includes an alarm feature that monitors this parameter, it is useful for the operator to track the lamp voltage so that future repairs can be anticipated before the alarm is triggered.

To display the lamp voltage, press the [ ] pushbutton from the Run screen to display the Main Menu. Use the [↓] pushbutton to move the cursor to Diagnostics, and press [↵] to display the Diagnostics menu. Use the [↓] pushbutton to move the cursor to Voltages, and press [↵] to display the lamp intensity screen. If this voltage is 1200 V, it is necessary to either replace the lamp or adjust the lamp voltage control circuit. For more information about replacing the lamp or adjusting the lamp voltage control circuit, see the "Servicing" chapter, or contact Thermo Fisher Scientific.

## Denuder Cleaning and Coating

Under normal operating conditions, the denuder will need to be cleaned and re-coated approximately once every two months. If the instrument is operated in an environment with high $SO_2$ levels or if the flow through the denuder is more than 1.5 liters per minute, this procedure should be done more frequently.

Materials Required:

- Latex gloves
- Protective eyewear
- Methanol
- De-ionized water
- Glycerol
- Sodium carbonate powder
- Vinyl caps or equivalent tight cover

1. Check unit for any dents and the inside of the tube for any apparent damage, such as, if the inner tubes are touching each other.

2. Wear gloves and perform procedure under an adequately vented hood. Prepare the cleaning solution consisting of 50% methanol and 50% water. With a vinyl cap on one end of the denuder, pour about 20 to

25 ml of the cleaning solution into the denuder. Put a vinyl cap on the open end and rinse the inside surfaces of the denuder by rotating and inverting the denuder continuously for 1 minute. Pour out dirty solution and repeat three times.

3. Prepare the coating solution consisting of 50 ml of methanol, 50 ml de-ionized water, 1 ml of glycerol, and 1.2 grams of sodium carbonate in the following order. First, mix the glycerol with the methanol. Then, in a separate container, mix the sodium carbonate with the de-ionized water, and then mix both solutions together. This should be enough to coat three to five denuders. Be sure that the sodium carbonate and glycerol are completely dissolved before use.

4. With a vinyl cap on one end of the denuder, pour about 20 to 25 ml of the solution into the denuder. Put a vinyl cap on the open end and rotate and invert the denuder continuously for 1 minute. Empty the solution and let dry (ideally by flowing clean air through the denuder for 15 minutes), then cap both ends if the denuder will not be re-installed immediately.

5. Discard excess solution after completing the coating process.

## Routine Flow Check

Proper flow rates and a leak-tight sampling system are critical to the operation of the Model 5020*i*. The system should be leak tested and all flow rates should be measured when the instrument is first installed and whenever the unit is shut down for maintenance or repairs. In addition, Thermo Fisher Scientific suggests that a routine flow check and a leak test should be run once every two months. The quality assurance program should include tracking of all flow measurements so that any degradation in flow can be detected and corrected before data integrity is affected.

Routine flow checks can be run by simply verifying that, in a closed system, the inlet flows match outlet flows. Inlet flows are measured by connecting a flow meter to the bulkhead fittings located on the back panel of the converter module and labelled SAMPLE and FILTER IN. Exhaust flows are measured at the bulkhead labelled EXHAUST on the rear panel of the analyzer module and at the bulkhead VENT on the rear panel of the converter. The flow meter must be capable of measuring flows between 250 and 1000 cc per minute, and the flow measurements must be made while the analyzer is operating in Sample Mode. Remember that when operating in Sample Mode, the instrument has two independent sample streams, the filtered background stream and unfiltered sample stream.

With the instrument in sample mode, the inward flow at the FILTER IN bulkhead should match the outward flow at the VENT bulkhead and the inward flow measured at the SAMPLE bulkhead of the converter should match the outward flow measured at the EXHAUST bulkhead of the analyzer. (A flow mismatch of up to 5 % for either pair of measurements is acceptable.)

In addition, the outward flow measured at the converter VENT must be at least 150 cc per minute greater than the inward flow measured at the converter SAMPLE. If the flow differential drops below 150 cc per minute, the background filter readings may be influenced by ambient sulfate, which will invalidate all measurement results taken since the last flow check.

## External Filter Replacement

The background sample line is equipped with an external filter that protects the capillary and pump from dust (**Figure 7–2**). The filter should be replaced once every six months. This filter will be effective if installed in either orientation. However, it will be more resistant to clogging if it is installed in the opposite orientation from that indicated on the filter housing. Once the filter has been used do not change the orientation.

## Capillary Inspection and Cleaning

To ensure that the pressure reducing capillaries do not plug or impair the flow of sample gas through the analyzer and converter, these should be inspected approximately every six months. Use the following procedure to inspect and clean the capillaries.

**Equipment Damage** Some internal components can be damaged by small amounts of static electricity. A properly ground antistatic wrist strap must be worn while handling any internal component. If an antistatic wrist strap is not available, be sure to touch the instrument chassis before touching any internal components. When the instrument is unplugged, the chassis is not at earth ground. ▲

1. Turn the instrument off, unplug the power cord, and remove the cover.

2. Locate the capillary holder in both the analyzer and converter and remove the nuts.

3. Remove the glass capillaries and their O-rings. (Keep track of which capillary goes with each holder. They are not interchangeable.)

4. Check each capillary for particulate deposits within the bore. Clean or replace each capillary if particulate deposits are present.

5. Check the O-rings for cuts or abrasions and replace if damaged.

6. Place an O-ring around each capillary and insert them back in their respective holders.

7. Finger-tighten the nut over each capillary holder enough to ensure a tight seal.

8. Re-install the instrument cover.

## Quartz Converter Core Replacement

The converter core is a consumable item with internal components that are depleted over time. It will need to be replaced on a regular basis. To maintain a high level of conversion efficiency, you should replace the converter core at least once every six months. If the fittings and tubing that run from the converter core to the filter housing are heavily contaminated, it is suggested that they should also be cleaned or replaced. Pre-cut tubing and the appropriate fittings are available from Thermo Fisher Scientific. Refer to the Replacement Parts List in the "Servicing" chapter

Equipment Required:

Quartz Converter Core Assembly

Screwdriver

Replacement Filter Line Assembly

**WARNING** The oven surfaces are very **hot**! Be careful not to touch the oven. It usually requires at least three hours for the exterior oven surfaces to cool to room temperature, and even then the oven inner surfaces can still be too hot to touch. ▲

**Equipment Damage** Some internal components can be damaged by small amounts of static electricity. A properly ground antistatic wrist strap must be worn while handling any internal component. If an antistatic wrist strap is not available, be sure to touch the instrument chassis before touching any internal components. When the instrument is unplugged, the chassis is not at earth ground. ▲

1. Turn the instrument off, unplug the power cord, and remove the blue instrument cover from the converter module. Be careful not to touch the oven, as the metal surfaces are very hot. It usually requires at least three hours for the external surfaces of the oven to cool to room temperature and at that time, the inner surfaces of the oven can still be too hot to touch.

2. Unplug the cable of the top heater from the power distribution board.

3. Unplug the connectors from the thermal fuse that is on the top heater.

4. Remove the top heater by removing the four mounting screws.

5. Disconnect the Teflon fittings from the converter core assembly.

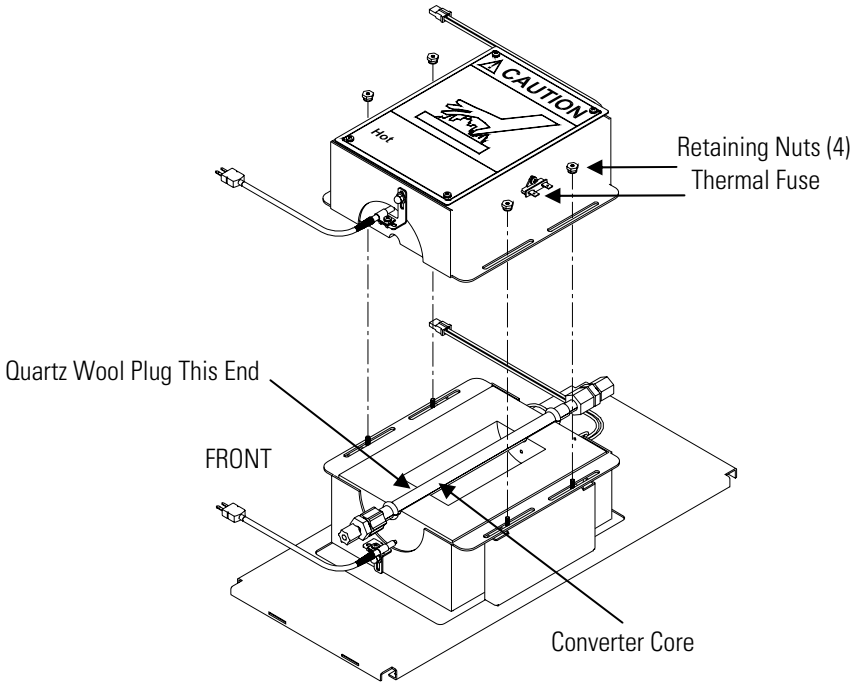


**Figure 5–2.** Quartz Converter Core Replacement

6. Remove the old converter core, then place the new converter core in the lower heater and re-attach the Teflon fittings. If you are replacing the tubing and fittings located downstream from the converter, the new parts can be installed at this time.

Be sure that the Teflon fittings are tight enough to prevent leaking, but be careful not to over-tighten or you may crack the quartz tube. Also, if the new converter core contains a quartz-wool plug, be sure that the tube is installed such that the end with the quartz wool plug is oriented toward the down-stream end of the converter heater (closest to the front panel). See **Figure 5–2**. If the quartz tube is installed in the wrong direction, the quartz wool plug will prevent sulfate from reaching the converter's reactive surface.

**Note** Some versions of the core assembly do not include quartz wool. ▲

7. Replace the thermocouple. Refer to "Converter Heater Thermocouple Replacement" on page 7-56, then return to this procedure.

8. Reverse the procedure described above to re-assemble the heater housing.

9. Run a leak test to identify any loose connections before the converter is too hot to touch. Refer to "System Leak Testing" that follows.

10. After allowing a 12-hour burn-in of the new core, be sure to leak test the converter again to verify that the Teflon fittings have not loosened during heat-up and burn-in.

## System Leak Testing

In addition to the routine flow test described earlier, a system leak test must be run when the system is first assembled, whenever it is moved and whenever the converter core is replaced. In addition, it is a good practice to run a leak test at the two-month service interval. The system leak test uses the analyzer's built in flow and pressure sensors to verify that all fittings and other gas connections are leak-tight to the degree necessary for normal operation.

**WARNING** High temperatures and voltages are present in the converter module. Trouble-shooting and leak repair must be done by a qualified technician using extreme caution. ▲

1. At the Main Menu, move the cursor to Diagnostics, and press ↵ to display the Diagnostics menu.

2. Move the cursor to Flow and press ↵ to display the **Flows** diagnostic screen.
   - The flow reading for the sample should be between 0.400 and 0.500 LPM.
   - The converter flow should be at least 0.150 LPM higher that the sample flow. If a flow test was just run, the flow indicated on the diagnostics display should match the flow that was just measured at the analyzer EXHAUST bulkhead to within plus or minus 50 cc per minute.
   - Return to the Diagnostics menu and select **Pressure**. The Chamber pressure reading shown on the diagnostic screen should be greater than 650 mmHg. If the pressure is less than 650 mmHg, it may indicate that the membrane filter needs to be replaced, or that the converter core is nearing the end of its useful lifetime. Note that as the converter core ages, the system pressure drop will increase due to debris that accumulates in the quartz wool plug at the end of the converter core.

3. On the rear panel of the converter module, block the bulkhead fitting labelled SAMPLE with a leak-tight 3/8-inch cap and block the bulkhead labelled FILTER IN with a ¼-inch leak-tight cap. (Some operators may wish to validate the entire sampling system by capping flow at a point further upstream, such as at the cyclone inlet.)

4. The chamber pressure and sample flow readings shown on the Diagnostic screens should start to decrease as the sampling pump draws a vacuum on the closed sample inlet. After 5 to 10 minutes the readings should stabilize. If the sampling system is sufficiently leak-tight, the final flow rate should be less than 0.200 LPM and the final sample pressure should be less than 300 mmHg. If a small flow meter is available, it is good practice to verify the internal flow sensor by using the flow meter to check the flow at the analyzer EXHAUST bulkhead. Also, with an external flow meter, check that the flow out of the VENT bulkhead is under 200cc when the FILTER IN bulkhead is capped. If not, ensure that the filter tubing connections are tight.

5. If the flow and pressure do not stabilize at or below the expected levels, it will be necessary to systematically step through the sampling system looking for leak points. The first step should be to cap the sample inlet on the rear panel of the analyzer module and verify that the leak is not in the analyzer. If the analyzer module is leak-tight, then the most likely points for leaks to develop are at the membrane filter housing in the converter module or at the Teflon fittings located on each end of

the converter core. The Teflon fittings are most likely to develop leaks if the converter temperature has been cycled several times or if a new converter core has just been installed.

## Dynamic Zero Test

The Model 5020*i* quantifies sulfate in the sample stream by comparing the signals produced when the sample is run directly into the converter to the signal produced when the sample is run through a HEPA filter before conversion. Since the HEPA filter only removes particulate material from the sample stream, any increase in signal that occurs when the filter is by-passed can be attributed to sulfur containing particles (primarily sulfates) in the sample stream.

In order for this type of differential measurement to provide accurate results at low concentrations, it is critical that the two measurements (sample mode and filter mode) produce essentially identical readings when the target compound is not present. That is, if the sample stream does not contain any sulfate particulate, the $SO_2$ analyzer should indicate the same reading when running in sample mode as it does when running in filter mode. The dynamic zero is a test that is designed to check this aspect of performance.

The dynamic zero test requires that a high efficiency particulate aerosol (HEPA) filter be placed in the sampling system, such that all sulfate particles will be removed from the sample stream regardless of the current operating mode. When run in this configuration over a period of several hours, the 5020*i* would ideally produce an average sulfate reading 0.0 µg/m3. In practice, readings taken over a period of 10 to 12 hours should average between –0.2 µg/m3 and +0.2 µg/m3.

If the converter is fully burned-in and the Model 5020*i* appears to be fully stable, but still fails the dynamic zero test, it may indicate a leak in one of the flow paths or the presence of an interfering contaminant somewhere in the plumbing.

Use the following procedure to perform a dynamic zero test.

1. Complete the system leak test described in this chapter to make sure that there are no significant leaks in the converter or analyzer plumbing.

2. Calibrate the $SO_2$ analyzer as described in the Calibration chapter.

3. Connect a high volume HEPA filter (refer to the “Converter Replacement Parts List” on page 7-45) between the SAMPLE bulkhead of the analyzer module and the external 3/8-inch stainless steel tubing.

Both the filtered background and actual sample stream will now pass through that HEPA filter. Depending on details of the installation, this may require some disassembly of the sampling system and/or additional fittings. Once the filter is installed, check the analyzer's bench pressure, as displayed in the Diagnostic menu, to be sure the filter has not introduced a significant flow restriction. If the HEPA filter produces a significant pressure drop, it may potentially introduce leaks that would invalidate the test.

4. At the Main Menu, scroll down to **Measurement Timing** and press [↵] to check the current settings. If you normally operate the unit in continuous mode, or if you are using extended sampling periods (greater than 30 minutes), we suggest that you change to the values shown below while running this test. If your normal operating parameters are similar to those shown below, the test should be run with your normal operating parameters.
   - Averaging time: 10 seconds
   - Filter time: 10 minutes
   - Sample time: 10 minutes
   - Transition time: 90 seconds

5. Press [▸] to return to the Run screen and verify that the instrument is set for automatic switching between sample and filter modes. If not, go back to the Main Menu, select Instrument Controls, then **Sample/Filter Mode** and set to Auto. With the settings shown above, the first data point will be produced after 30 minutes and additional data points will be produced every 20 minutes.

6. Initiate data collection using either the analog outputs or the RS-232 based digital interface and allow the instrument to run for a minimum of 12 hours. The data of interest in this test is the actual sulfate reading, which as discussed earlier, should have an average value close to zero with a standard deviation of 0.20 µg/m3 or less. Whenever possible, this data should be collected using the RS-232 system. The RS-232 system provides a more complete set of diagnostics than the analog outputs. If the analog outputs are used, verify that the output's zero has been properly adjusted so that even a small error in the instrument reading will be recorded.

7. At the conclusion of the test, reset the measurement parameters back to the original values.

# Pump Rebuilding

For normal use, replace the pump diaphragm in both the analyzer and converter module approximately every 12 months, or whenever routine flow checks indicate that pump performance is dropping. It is critical to proper operation of the analyzer that the flow rate produced by the filter pump in the converter stays higher than the flow rate of the analyzer.

Equipment Required:

Pump repair kit

Screwdriver

**Equipment Damage** Some internal components can be damaged by small amounts of static electricity. A properly ground antistatic wrist strap must be worn while handling any internal component. If an antistatic wrist strap is not available, be sure to touch the instrument chassis before touching any internal components. When the instrument is unplugged, the chassis is not at earth ground. ▲

1. Turn the instrument off, unplug the power cord, and remove the cover.

2. Loosen the fittings and remove both lines going to the pump.

3. Remove the four screws from the top plate, remove the top plate, flapper valve, and the bottom plate (see **Figure 5–3**).

4. Remove the clamping disk holding the diaphragm and Teflon protective wafer onto the clamping rod. Remove the old diaphragm and Teflon wafer and replace.

5. Assemble the pump by following the above procedure in reverse, making sure not to over-tighten the clamping disk. Be sure the Teflon side of the diaphragm is facing up and that the flapper valves cover the holes of the top and bottom plate as shown.

6. Re-install the pump connections and the instrument cover.

7. Turn power ON and check that the analyzer flow reads approximately 0.45 LPM for the analyzer or approximately 0.65 LPM for the converter.

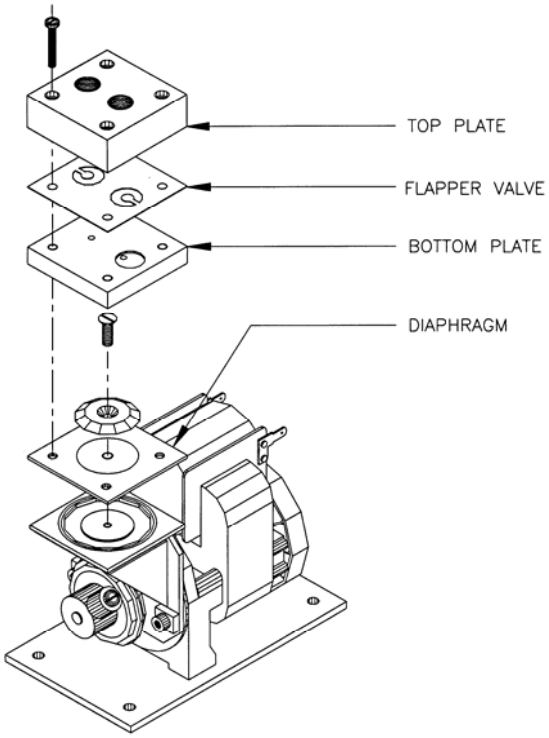


**Figure 5–3.** Pump Assembly

## Filter Replacement

There are three filters associated with the converter module that need routine replacing to keep the Model 5020*i* running properly.

1. The 47 mm membrane filter is for the Converter Sample line, and is inside the orange filter housing on the outside of the rear panel. This should be visually inspected monthly and replaced every six months or whenever the analyzer's chamber pressure drops below 650 mmHg.

2. The external HEPA depth filter is the blue cartridge style filter that's placed before the converter FILTER IN bulkhead. This helps protect the filter line capillary from clogging with dust and debris and should be replaced every 6 months. Note that this filter is installed in the opposite direction of that indicated on the housing. The reverse installation prolongs filter life while still providing adequate performance for this application.

3. The internal HEPA depth filter removes sulfate and other particulates from the sample stream when the instrument is in "background" or

"filter" mode. It is inside the converter module attached to the rear panel of the instrument with Teflon tubing. The filter should be replaced every 12 months. Note that this filter is installed such that the air flows in the direction indicated by the arrow on the filter housing.

# Chapter 6
# Troubleshooting

This instrument has been designed to achieve a high level of reliability. In the rare event of problems or failure, the troubleshooting guidelines, board-level connection diagrams, connector pin descriptions, and testing procedures presented in this chapter should be helpful in isolating and identifying problems.

For additional fault location information refer to the "Preventive Maintenance" chapter in this manual.

The service mode, described in the "Operation" chapter, includes parameters and functions that are useful when making adjustments or diagnosing problems.

The Technical Support Department at Thermo Fisher Scientific can also be consulted in the event of problems. See "Service Locations" at the end of this chapter for contact information. In any correspondence with the factory, please note both the serial number and program number of the instrument.

This chapter provides the following troubleshooting information:


- "Safety Precautions" on page 6-1
- "Troubleshooting Guides" on page 6-1
- "Board-Level Connection Diagrams" on page 6-12
- "Connector Pin Descriptions" on page 6-14
- "Service Locations" on page 6-30


## Safety Precautions

Read the safety precautions in the Preface and the "Servicing" chapter before performing any actions listed in this chapter.

## Troubleshooting Guides

The troubleshooting guides presented in this chapter are designed to help isolate and identify instrument problems.

**Table 6–1.** Troubleshooting - Power-Up Failures, **Table 6–2.** Troubleshooting - Calibration Failures, **Table 6–3.** Troubleshooting -

Measurement Failures, and **Table 6–4.** Troubleshooting - Converter Failures provide general troubleshooting information and indicate the checks that you should perform if you experience an instrument problem.

**Table 6–5.** Troubleshooting - Alarm Messages lists all the alarm messages you may see on the display and provides recommendations about how to resolve the alarm condition.

**Table 6–1.** Troubleshooting - Power-Up Failures

| Malfunction | Possible Cause | Action |
|---|---|---|
| Does not start<br>(The backlight on the display does not come on and the pump motor is not running.) | No power or wrong power configuration | Check the line to confirm that power is available and that it matches the voltage and frequency configuration of the instrument. |
| | Main fuse is blown or missing | Unplug the power cord, open the fuse drawer on the back panel, and check the fuses visually or with a multimeter. |
| | Bad switch or wiring connection | Unplug the power cord, disconnect the switch and check operation with a multimeter. |
| Display does not come on. (Pump is running.) | DC power supply failure | Check the green LED on the back edge of the power supply. If the LED is off, the supply has failed. |
| | DC power distribution failure | Check surface mount LEDs labelled “24V PWR” on the motherboard and the interface board. If lit, power is OK. |
| | Display failure | If possible, check instrument function through RS-232 or Ethernet.<br>Contact Thermo Fisher Scientific Service Department. |
| Power comes on and the display functions, but the pump is not running. | AC power is not reaching the pump. | Locate the three-pin connector on the interface board and use a voltmeter to check AC voltage across the two black wires (should read 110 - 120V, even on 220V or 100V instruments). |
| | Pump is jammed due to a new or stiff diaphragm. | Carefully rotate the pump fan to get past sticking point. |
| | Pump bearings have failed. | Disconnect AC power and remove the gas lines from the pump head, then try to rotate the pump fan. If it is jammed, or noisy, the motor bearings may have failed. |

**Table 6–2.** Troubleshooting - Calibration Failures

| Malfunction | Possible Cause | Action |
|---|---|---|
| Cannot zero instrument or there is a high background signal when sampling zero air. (Zero air should produce a reading equivalent to less than 5 ppm $SO_2$.) | Zero air system is faulty, needs new $SO_2$ scrubbers or requires maintenance. | Test against an ultra-zero cylinder from a reputable scientific gas supplier or check effect of a new chromatography grade activated charcoal scrubber installed at the instrument inlet. |
| | Zero air flow rate is inadequate. | Check by-pass or atmospheric pressure vent to verify that the zero air system is providing more flow than the instrument is drawing. |
| | Instrument is not drawing in span gas. | Check sample Flow and Pressure readings on the Diagnostics screen. |
| | | Use an independent flow meter to check flows at the SAMPLE and EXHAUST bulkheads (they should match). |
| | | Perform a leak test, as described in the "Preventive Maintenance" chapter. |
| | Span gas containing $SO_2$, NO, or a hydrocarbon is contaminating system. | Verify that span gases connected to the calibration system are shut off and leak-tight. |
| | Internal or external lines, filters, and other sample handling equipment are contaminated or dirty. | Replace inlet filter (if installed) and as much of the tubing as possible. |
| | High scattered light | Go to Instrument Controls, select Flash Lamp and toggle to OFF. If the previously high signal drops to zero or less when the flash lamp is off, the problem may be caused by scattered light from dust in the optical bench. If so, carefully clean the optical bench. |
| | Input board failure | Disconnect the input board from the interface board by unplugging ribbon cable labelled "INPUT." The instrument reading should drop to zero or to a negative value. |
| Instrument appears to zero, but there is weak or no response to span gas. | Span cylinder empty | Check the source pressure. |

| Malfunction | Possible Cause | Action |
|---|---|---|
| | Calibration system failure | Check solenoids or other hardware to be sure that span gas is being delivered. |
| | Flow rate of the diluted span mix is inadequate. | Check by-pass or atmospheric vent to verify that the system is providing more flow than the instrument draws. |
| | Instrument is not drawing in span gas. | Check sample Flow and Pressure readings on the Diagnostics screen. |
| | | Use an independent flow meter to check flows at the SAMPLE and EXHAUST bulkheads (they should match). |
| | | Perform a leak test, as described in the "Preventive Maintenance" chapter. |
| | $SO_2$ is being absorbed by tubing, filters, or dirt in the calibration system. | Replace any lines made of vinyl or other plastics with fresh Teflon or stainless steel. Replace Teflon filter membranes that look dirty. Remove any filters that are not Teflon membranes. |
| | Flash lamp has failed. | Listen for the rapid clicking of the flash lamp. Check the flash lamp voltage and intensity. |
| | PMT or input board has failed. | Check the PMT voltage and run the optical span test. A good optical span test indicates that the PMT is OK and that the problem is more likely the flash lamp. |
| Zero or Span will not stabilize. | Flow rate of the diluted span mix is inadequate. | Check by-pass or atmospheric pressure vent to verify that the calibration system is providing more flow than the instrument is drawing. |
| | Instrument is not drawing in span gas. | Check sample Flow and Pressure readings on the Diagnostics screen. |
| | | Use an independent flow meter to check flows at the SAMPLE and EXHAUST bulkheads (they should match). |
| | | Perform a leak test, as described in the "Preventive Maintenance" chapter. |
| | $SO_2$ is being absorbed and released by dirt in the tubing or filters of the calibration system, | Replace any lines made of vinyl or other plastics with fresh Teflon or stainless steel. Replace Teflon filter membranes that look dirty. Remove |

| Malfunction | Possible Cause | Action |
|---|---|---|
| | or contamination inside the instrument. | any filters that are not Teflon membranes. |
| | Averaging time is not set correctly. | Check the Averaging Time in Main Menu. If too high, the unit will be slow to stabilize. If too low, the signal may appear noisy. |
| | PMT high voltage power supply failure | Check the PMT high voltage power supply voltage. This voltage should be approximately -600 volts (violet wire is positive). |
| | Flasher lamp | Replace with known good lamp to see if the lamp is the problem. |

**Table 6–3.** Troubleshooting - Measurement Failures

| Malfunction | Possible Cause | Action |
|---|---|---|
| Reduced response or no response to sample gas with alarm(s) indicated. | Undefined electronic failure or pump failure | Check alarm screens and the diagnostic voltage screen to localize fault. |
| | | Check the response to known span gas. |
| | | Run an optical span test. |
| | Instrument is not drawing in sample as expected. | Check sample Flow and Pressure readings on the Diagnostics screen. |
| | | Use an independent flow meter to check flows at the SAMPLE and EXHAUST bulkheads (they should match). |
| | | Perform a leak test, as described in the “Preventive Maintenance” chapter. |
| Reduced response or no response to sample gas with no alarms indicated. | Instrument is not drawing in sample as expected. | Check sample Flow and Pressure readings on the Diagnostics screen. |
| | | Use an independent flow meter to check flows at the SAMPLE and EXHAUST bulkheads (they should match). |
| | | Perform a leak test, as described in the “Preventive Maintenance” chapter. |
| | | Check the external plumbing for leaks or other problems. |
| | | Check all external plumbing and the source of the sample to verify that the $SO_2$ is not |

| Malfunction | Possible Cause | Action |
|---|---|---|
| | | being adsorbed by the sampling system. Lines carrying $SO_2$ must be made from clean Teflon or stainless steel. |
| | Detection circuit failure | Go to Diagnostics menu and run the optical span test to verify PMT and associated electronics. |
| | Instrument is not properly calibrated. | Go to the Calibration Factors menu and verify that the $SO_2$ Background and $SO_2$ Coefficient are set appropriately. |
| | Input board malfunction | Go to Service Menu and select Input Board Test to verify A/D signal on each range. |
| | Signal cable failure | While viewing the Input Board Test screen, set the gain to 100 and then disconnect the signal cable from the input board. The signal should drop from a value above 1000 to near zero. |
| | PMT failure | Check the PMT voltage (Service menu). |
| | Flash lamp assembly failure | Check the lamp voltage (Service menu). |
| Span calibration coefficient outside acceptable limits of 0.5 – 2.0. | Bad span gas | Verify quality of span gas. |
| | System leak | Perform leak test. |
| | Insufficient calibrator flow | Verify calibrator is providing a flow of at least 0.8 LPM. |
| Excessive noise or spikes on analog outputs | Defective or low sensitivity PMT | Check PMT voltage and run an optical span test. Replace PMT with known good unit if possible. |
| | Defective input board or BNC connection | Identify the defective component and replace. |
| | Noise pick-up by recorder or data logger | Check analog cable shielding and grounding. |
| | | Try to localize source of noise by comparing analog signal to data collected through RS-232 or Ethernet. |
| Poor linearity | Problem with calibrator | Verify accuracy of the multipoint calibration system with an independent flow meter. |
| | Problem with input board range switching | Go to the Input Board Test screen (Service menu) and step through each range while the instrument samples a known stable source of $SO_2$. |
| | | Stay on the Input Board Test screen, and while holding instrument on the lowest |

| Malfunction | Possible Cause | Action |
|---|---|---|
| | | gain, step the calibrator through all $SO_2$ levels. |
| | | Manually plot signal vs. concentration to verify linearity. |
| | Leak in sample probe line | Check for variable dilution. |
| Excessive response time | Averaging time is not set correctly. | Go to Averaging Time (Main Menu) and verify setting. |
| | Instrument is not drawing in sample at normal flow rate. | Check sample Flow and Pressure readings on the Diagnostics screen. |
| | | Use an independent flow meter to check flows at the SAMPLE and EXHAUST bulkheads (they should match). |
| | | Perform a leak test, as described in the "Preventive Maintenance" chapter. |
| | $SO_2$ is being absorbed and/or released by dirt in the tubing or filters of the sampling system, or inside the instrument. | Replace any lines made of vinyl or other plastics with fresh Teflon or stainless steel. |
| | | Replace Teflon filter membranes that look dirty. |
| | | Remove any filters that are not Teflon membranes. |
| Analog signal doesn't match expected value. | Software has not been configured. | Verify that the selected analog output has been properly configured to match the data system. |
| | Analog output goes above full-scale value or below zero | By default, a 5% over and underrange on the analog outputs is provided. If this is not desirable due to system restrictions, it may be turned off in the INSTRUMENT CONTROLS > I/O CONFIGURATION > ANALOG OUTPUT CONFIG screens. |
| | Recorder is drawing down output. | Verify that the recorder or data logger input impedance meets minimum requirements. |
| Flow meter fluctuations | Dirty pump diaphragm | Clean or replace pump diaphragm. |
| | Capillary blocked | Clean or replace capillary. |
| | Clogged Teflon line | Inspect all sample lines. |

**Table 6–4.** Troubleshooting - Converter Failures

| Malfunction | Possible Cause | Action |
|---|---|---|
| No or low response to sample (low $SO_4$ $\mu g/m^3$ concentration) | Broken Quartz tube | When cooled, replace converter core assembly |
| | Filters, Teflon fittings, or tubing are clogged | Replace filters and or tubing<br>Clean Teflon fittings |
| | Internal instrument leak | Perform leak test |
| | Converter core expended | Replace core assembly. |
| | Heater failure | Check converter temperatures |
| High filter reading | Kynar HEPA filter is leaking | Replace Kynar filter |
| | Loose fitting | Ensure that all fittings in the filtered flow path are tight. Especially the capillary holder. |
| | Insufficient Converter pump flow | Verify the Converter pump is providing a flow of at least 0.7 LPM. Clean or replace capillary |
| | Denuder requires cleaning | Clean and re-coat denuder |
| Excessive response time | Partially blocked capillary | Check analyzer flow and clean or replace capillary |
| | Loose fittings | Make certain that all fittings are tight, especially the capillary holders |
| | Quartz tube is fractured | Replace quartz converter core assembly |
| Converter heater is not heating up (converter temperature and BTE temperature too low) | Blown thermal fuse | Replace thermal fuse |
| | Blown fuse on power distribution board | Replace fuse |
| | Controlling thermocouple is open (green LED will be ON) | Replace thermocouple |
| | Heaters not plugged in | Plug heaters into interface board. |
| | Converter not connected to Analyzer | Connect umbilical cord from Converter to Analyzer |
| | Heaters old or not working properly | Replace Heaters |
| Converter solenoid not working | Converter controller board | Repair or replace converter controller board |
| | Valves not receiving | Check voltages |

| Malfunction | Possible Cause | Action |
|---|---|---|
| | 24V | |
| | Solenoid valve failure | Replace valve |
| Converter pump not working | Blown rear panel fuse | Replace fuse |
| | Bad Pump | Replace pump |
| Sulfate concentration out of range | Out of calibration | Recheck span concentration |
| | | Increase the calibration stage time |
| | | Check for loose fittings and leak lest |
| | New or cooled converter core | When installing a new quartz converter core assembly or if the converter has been OFF and cooled down, burn in core for 24 hours before calibration and sample measurements. |
| Consistently very low or zero sulfate concentration reading | Converter core (steel rod) is deteriorated | Install new quartz converter core assembly |
| | Filtered background reads too high | Install new quartz converter core assembly |

**Table 6–5.** Troubleshooting - Alarm Messages

| Alarm Message | Possible Cause | Action |
|---|---|---|
| Alarm - Internal Temp | Instrument overheating | Replace fan if not operating properly. |
| | | Clean or replace foam filter, refer to the “Preventive Maintenance” chapter in this manual. |
| | | Check 10K thermistor on measurement interface board, replace if bad. |
| Alarm - Chamber Temp | Chamber temperature below set point | Check 10K thermistor, replace if bad. |
| | | Check temperature control board to insure the LEDs are coming on. If not, temperature control board could be defective. |
| | Heaters have failed | Check connector pins for continuity. |
| Alarm - Converter Temp | Converter temperature above or below set point | Check settings. |
| | Heaters have failed | Check connector pins for continuity. |
| | Not fully warmed up | Wait until converter reaches proper operating temperature. |

| Alarm Message | Possible Cause | Action |
|---|---|---|
| Alarm - Converter Temp Diff | One of the heater halves has failed | Identify faulty heater half and replace. |
| Alarm - Perm Gas Temp | Incorrect Perm oven set temperature or alarm settings | Check that the alarm settings match the set temp. |
| | Perm oven heater thermistor or gas thermistor is out of calibration | Calibrate the thermistor. |
| | Perm oven failure | Replace the Perm oven. |
| Alarm – Chamber Pressure | High pressure indication | Check for plumbing leaks. Perform leak test.<br>Check the pump for a tear in the diaphragm, replace with pump repair kit if necessary.<br>Check that capillary is properly installed and O-rings are in good shape. Replace if necessary. |
| Alarm – Sample Flow | Sample Flow low | Check sample capillary for blockage. Replace as necessary.<br>If using sample particulate filter make sure it is not blocked. Disconnect sample particulate filter from the SAMPLE bulkhead, if flow increases, replace the filter.<br>Perform leak test to check for internal leaks.<br>Converter tube and connecting tubing may be blocked with converter core sediment. Replace.<br>Check denuder, cyclone, and sample inlet, if installed, for breakage. |
| | Flow high | When delivering zero air or gas to the instrument, use an atmospheric dump. |
| Alarm – Conv Flow | Leak flow low | HEPA filters may be too dirty. Replace.<br>Check for plumbing leaks. Perform leak test.<br>Check the pump for a tear in the diaphragm, replace with pump repair kit if necessary.<br>Check that capillary is properly installed and O-rings are in good shape. Replace if necessary.<br>Converter tube and connecting tubing may be blocked with converter core sediment. Replace.<br>Check denuder, cyclone, and sample inlet, if installed, for breakage. |
| | Flow high | Check for leaks or loose fittings on pump inlet side. |
| Alarm – Ambient Temp | Outside temperature at sample inlet out of range | Calibrate the thermocouple. |

| Alarm Message | Possible Cause | Action |
|---|---|---|
| | Sensor failure | Check electrical connections and replace ambient temperature thermocouple, if necessary. |
| Alarm – Ambient Pressure | Outside pressure at converter box location out of range | Calibrate the pressure sensor. |
| | Sensor failure | Check electrical connections and replace pressure sensor, if necessary. |
| Alarm – Lamp Intensity | Low - lamp is failing | Check that the lamp and trigger pak are securely fastened.<br>Replace lamp. |
| Alarm - Lamp Voltage | Low voltage (<550V) lamp power supply failed | Replace the lamp power supply. |
| | High voltage (>1200V) flash lamp failed | Replace the flash lamp. |
| Alarm – Auto Timing | Incorrect auto timing settings | Recheck settings of sample time, filter time, transition time, and averaging time. |
| Alarm - Zero Check<br>Alarm - Span Check | Instrument out of calibration | Recalibrate instrument. |
| Alarm - Zero Autocal<br>Alarm - Span Autocal | Instrument out of calibration | Check gas supply. Perform manual calibration. |
| Alarm – $SO_4$ Conc. | Concentration has exceeded range limit | Check to insure range corresponds with expected value. If not, select proper range. |
| | Concentration low | Check user-defined low set point, be sure the min trigger is set as desired. |
| Alarm - Motherboard Status<br>Alarm - Interface Status<br>Alarm - I/O Exp Status | Internal cables not connected properly<br>Board is defective | Check that all internal cables are connected properly. Recycle AC power to instrument. If still alarming, change board. |
| Alarm – Ext Conv Status | Defective external cable | Replace cable. |

# Board-Level Connection Diagrams

**Figure 6-1**, **Figure 6-2**, and **Figure 6–3** are board-level connection diagrams for the common electronics, measurement system, and converter module. These illustrations can be used along with the connector pin descriptions in **Table 6–6** through **Table 6–15** to troubleshoot board-level faults.

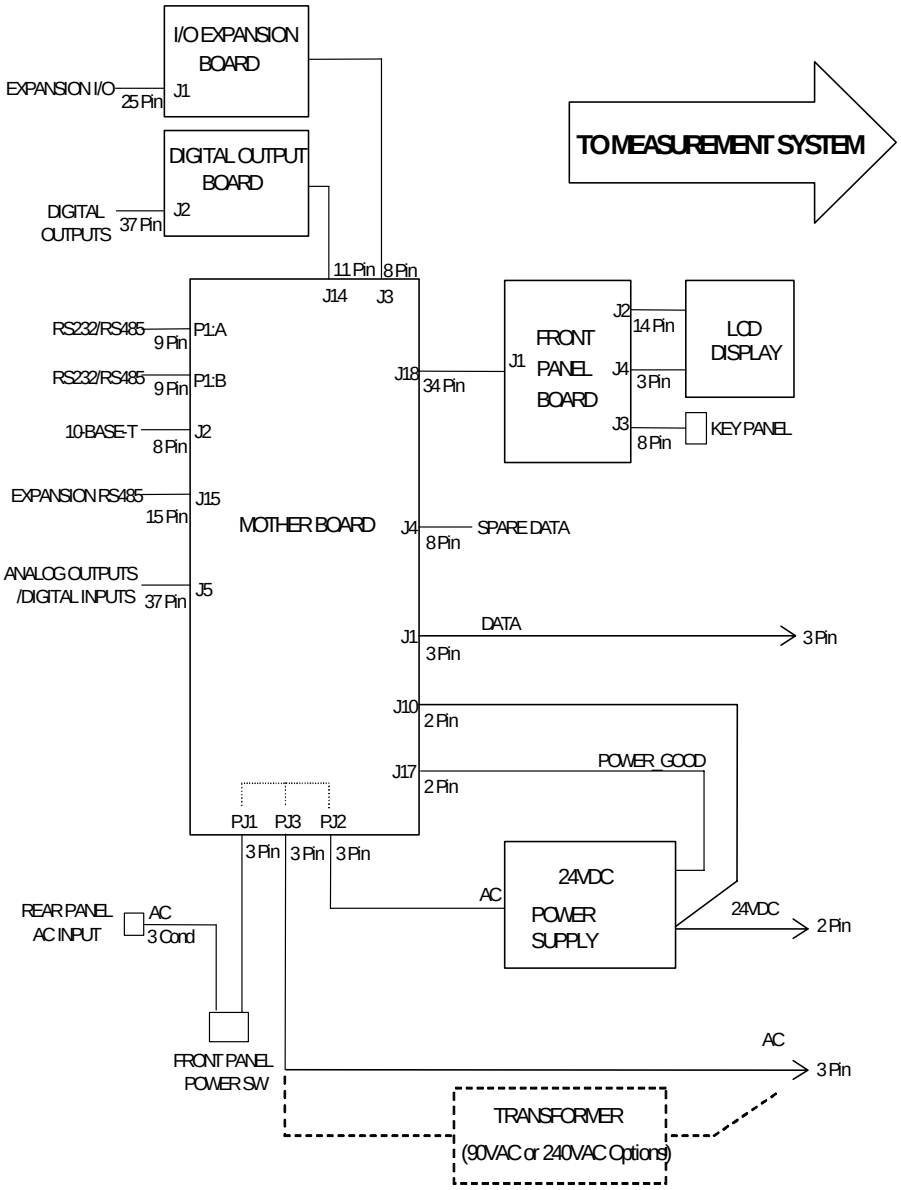


**Figure 6–1.** Board-Level Connection Diagram – Common Electronics

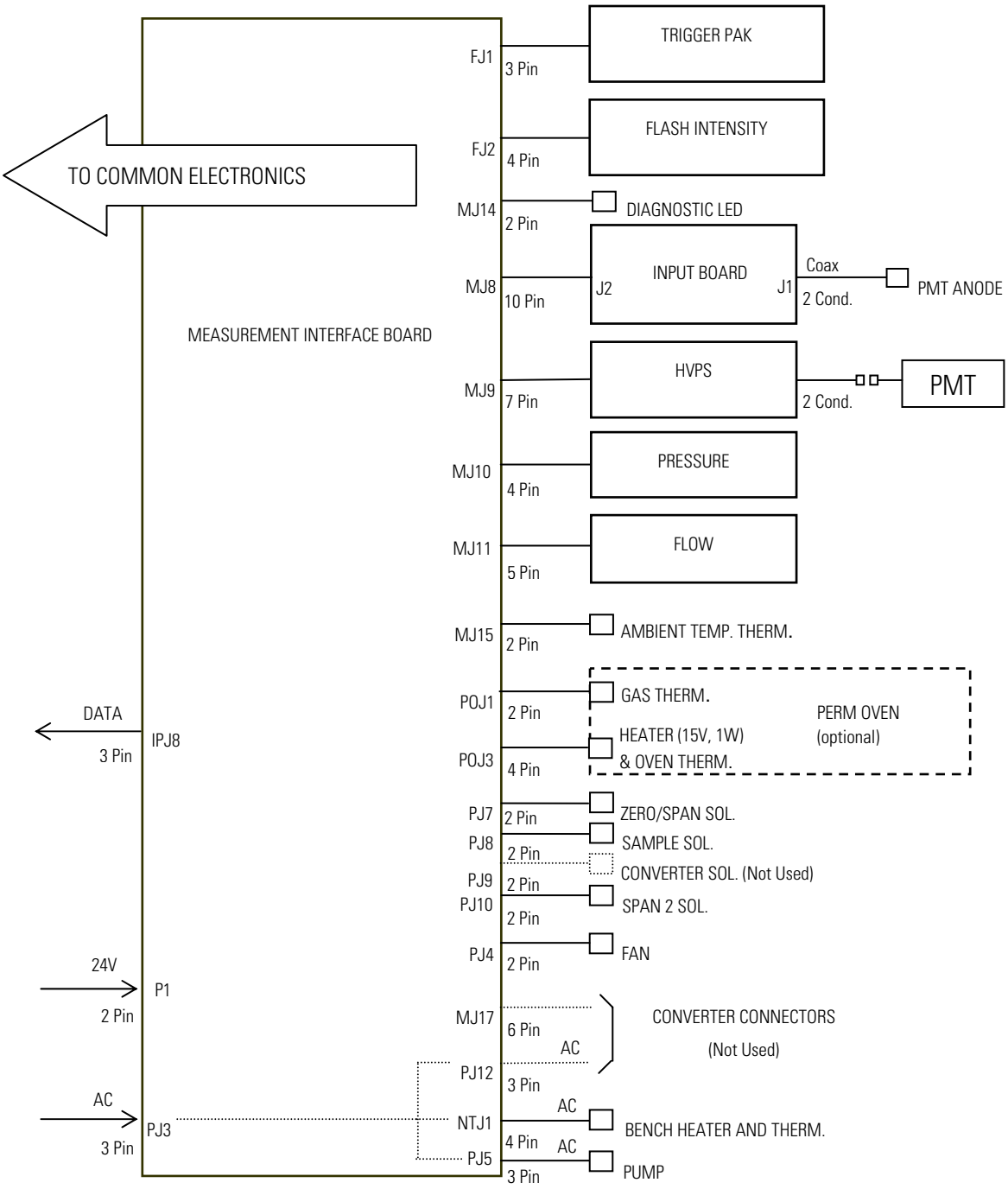


**Figure 6–2.** Board-Level Connection Diagram – Measurement System

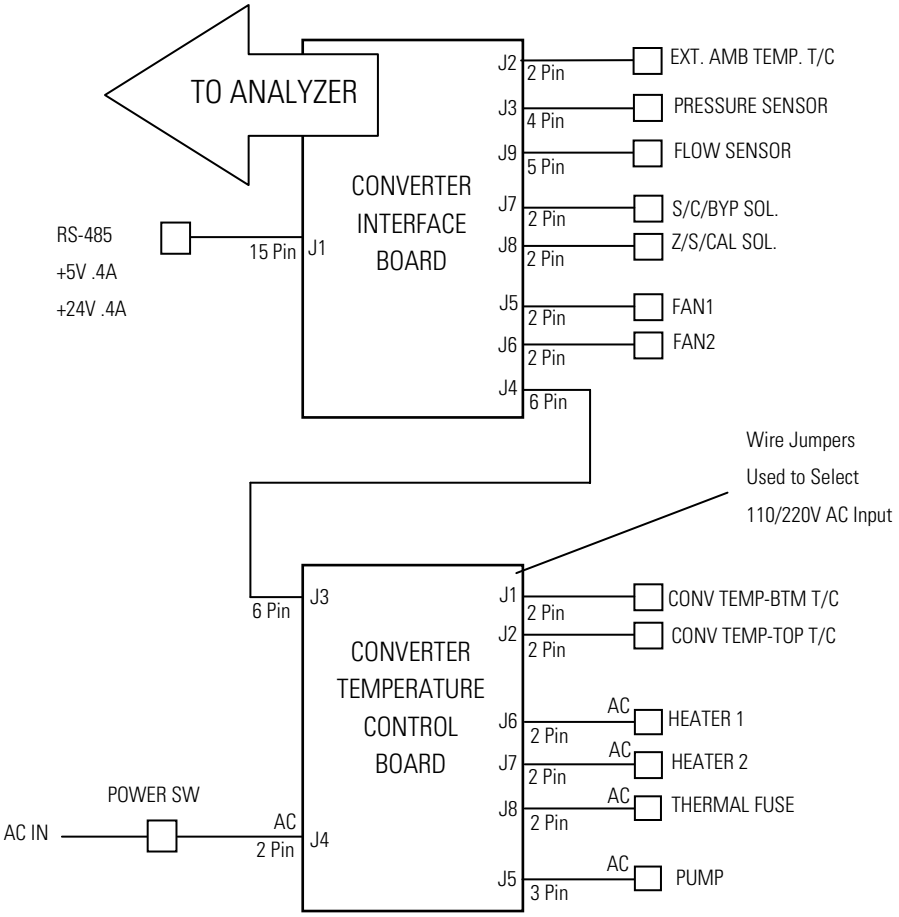


**Figure 6–3.** Board-Level Connection Diagram – Converter Module

## Connector Pin Descriptions

The connector pin descriptions in **Table 6–6** through **Table 6–15** can be used along with the board-level connection diagrams to troubleshoot board-level faults.

**Table 6–6.** Motherboard Connector Pin Descriptions

| Connector Label | Reference Designator | Pin | Signal Description |
|---|---|---|---|
| INTF DATA | J1 | 1 | Ground |
| | | 2 | +RS485 to Interface Board |
| | | 3 | -RS485 to Interface Board |
| 10-BASE-T | J2 | 1 | Ethernet Output (+) |
| | | 2 | Ethernet Output (-) |

| Connector Label | Reference Designator | Pin | Signal Description |
|---|---|---|---|
| | | 3 | Ethernet Input (+) |
| | | 4 | NC |
| | | 5 | NC |
| | | 6 | Ethernet Input (-) |
| | | 7 | NC |
| | | 8 | NC |
| EXPANSION BD | J3 | 1 | +5V |
| | | 2 | +24V |
| | | 3 | +24V |
| | | 4 | Ground |
| | | 5 | Ground |
| | | 6 | Ground |
| | | 7 | +RS485 to Expansion Board |
| | | 8 | -RS485 to Expansion Board |
| SPARE DATA | J4 | 1 | +5V |
| | | 2 | +24V |
| | | 3 | +24V |
| | | 4 | Ground |
| | | 5 | Ground |
| | | 6 | Ground |
| | | 7 | +RS485 to Spare Board |
| | | 8 | -RS485 to Spare Board |
| I/O | J5 | 1 | Power Fail Relay N.C. Contact |
| | | 2 | Ground |
| | | 3 | TTL Input 1 |
| | | 4 | TTL Input 2 |
| | | 5 | Ground |
| | | 6 | TTL Input 5 |
| | | 7 | TTL Input 7 |
| | | 8 | TTL Input 8 |
| | | 9 | TTL Input 10 |
| | | 10 | Ground |
| | | 11 | TTL Input 13 |
| | | 12 | TTL Input 15 |

| Connector Label | Reference Designator | Pin | Signal Description |
|---|---|---|---|
| | | 13 | Ground |
| | | 14 | Analog Voltage Output 1 |
| | | 15 | Analog Voltage Output 3 |
| | | 16 | Ground |
| | | 17 | Analog Voltage Output 5 |
| | | 18 | Ground |
| | | 19 | Ground |
| | | 20 | Power Fail Relay COM |
| | | 21 | Power Fail Relay N.O. Contact |
| | | 22 | Ground |
| | | 23 | TTL Input 3 |
| | | 24 | TTL Input 4 |
| | | 25 | TTL Input 6 |
| | | 26 | Ground |
| | | 27 | TTL Input 9 |
| | | 28 | TTL Input 11 |
| | | 29 | TTL Input 12 |
| | | 30 | TTL Input 14 |
| | | 31 | TTL Input 16 |
| | | 32 | Ground |
| | | 33 | Analog Voltage Output 2 |
| | | 34 | Analog Voltage Output 4 |
| | | 35 | Ground |
| | | 36 | Analog Voltage Output 6 |
| | | 37 | Ground |
| SER EN | J7 | 1 | Serial Enable Jumper |
| | | 2 | +3.3V |
| 24V IN | J10 | 1 | +24V |
| | | 2 | Ground |
| DIGITAL OUTPUT | J14 | 1 | +5V |
| | | 2 | +24V |
| | | 3 | +24V |
| | | 4 | Ground |
| | | 5 | Ground |

| Connector Label | Reference Designator | Pin | Signal Description |
|---|---|---|---|
| | | 6 | Ground |
| | | 7 | SPI Reset |
| | | 8 | SPI Input |
| | | 9 | SPI Output |
| | | 10 | SPI Board Select |
| | | 11 | SPI Clock |
| EXT. RS485 | J15 | 1 | -RS485 to Rear Panel |
| | | 2 | +RS485 to Rear Panel |
| | | 3 | +5V |
| | | 4 | +5V |
| | | 5 | +5V |
| | | 6 | Ground |
| | | 7 | Ground |
| | | 8 | Ground |
| | | 9 | NC |
| | | 10 | NC |
| | | 11 | +24V |
| | | 12 | +24V |
| | | 13 | +24V |
| | | 14 | +24V |
| | | 15 | +24V |
| 24V MONITOR | J17 | 1 | 24V Power Monitor |
| | | 2 | Ground |
| FRONT PANEL BD | J18 | 1 | Ground |
| | | 2 | Ground |
| | | 3 | LCLK – LCD Signal |
| | | 4 | Ground |
| | | 5 | Ground |
| | | 6 | LLP – LCD Signal |
| | | 7 | LFLM – LCD Signal |
| | | 8 | LD4 – LCD Signal |
| | | 9 | LD0 – LCD Signal |
| | | 10 | LD5 – LCD Signal |
| | | 11 | LD1 – LCD Signal |

| Connector Label | Reference Designator | Pin | Signal Description |
|---|---|---|---|
| | | 12 | LD6 – LCD Signal |
| | | 13 | LD2 – LCD Signal |
| | | 14 | LD7 – LCD Signal |
| | | 15 | LD3 – LCD Signal |
| | | 16 | LCD Bias Voltage |
| | | 17 | +5V |
| | | 18 | Ground |
| | | 19 | Ground |
| | | 20 | LCD_ONOFF – LCD Signal |
| | | 21 | Keypad Row 2 Input |
| | | 22 | Keypad Row 1 Input |
| | | 23 | Keypad Row 4 Input |
| | | 24 | Keypad Row 3 Input |
| | | 25 | Keypad Col 2 Select |
| | | 26 | Keypad Col 1 Select |
| | | 27 | Keypad Col 4 Select |
| | | 28 | Keypad Col 3 Select |
| | | 29 | Ground |
| | | 30 | Ground |
| | | 31 | Ground |
| | | 32 | Ground |
| | | 33 | +24V |
| | | 34 | +24V |
| RS232/RS485:A | P1:A | 1 | NC |
| | | 2 | Serial Port 1 RX (-RS485 IN) |
| | | 3 | Serial Port 1 TX (-RS485 OUT) |
| | | 4 | NC |
| | | 5 | Ground |
| | | 6 | NC |
| | | 7 | Serial Port 1 RTS (+RS485 OUT) |
| | | 8 | Serial Port 1 CTS (+RS485 IN) |
| | | 9 | NC |
| RS232/RS485:B | P1:B | 1 | NC |
| | | 2 | Serial Port 2 RX (-RS485 IN) |

| Connector Label | Reference Designator | Pin | Signal Description |
|---|---|---|---|
| | | 3 | Serial Port 2 TX (-RS485 OUT) |
| | | 4 | NC |
| | | 5 | Ground |
| | | 6 | NC |
| | | 7 | Serial Port 2 RTS (+RS485 OUT) |
| | | 8 | Serial Port 2 CTS (+RS485 IN) |
| | | 9 | NC |
| AC IN | PJ1 | 1 | AC-HOT |
| | | 2 | AC-NEUT |
| | | 3 | AC-Ground |
| AC 24VPWR | PJ2 | 1 | AC-HOT |
| | | 2 | AC-NEUT |
| | | 3 | AC-Ground |
| AC INTF BD | PJ3 | 1 | AC-HOT |
| | | 2 | AC-NEUT |
| | | 3 | AC-Ground |

**Table 6–7.** Measurement Interface Board Connector Pin Descriptions

| Connector Label | Reference Designator | Pin | Signal Description |
|---|---|---|---|
| DATA | IPJ8 | 1 | Ground |
| | | 2 | +RS485 from Motherboard |
| | | 3 | -RS485 from Motherboard |
| FLASH TRIG | FJ1 | 1 | Flash Voltage |
| | | 2 | Flash Trigger |
| | | 3 | Ground |
| FLASH INT | FJ2 | 1 | +15V |
| | | 2 | -15V |
| | | 3 | Ground |
| | | 4 | Lamp Intensity |
| INPUT BD | MJ8 | 1 | +15V |
| | | 2 | Ground |
| | | 3 | -15V |
| | | 4 | +5V |
| | | 5 | Ground |

| Connector Label | Reference Designator | Pin | Signal Description |
|---|---|---|---|
| | | 6 | Measurement Frequency Output |
| | | 7 | Sample Hold |
| | | 8 | NC |
| | | 9 | GAIN A |
| | | 10 | GAIN B |
| HVPS | MJ9 | 1 | HV Power Supply Voltage Adjust |
| | | 2 | Ground |
| | | 3 | HV Power Supply On/Off |
| | | 4 | Ground |
| | | 5 | HV Power Supply Voltage Monitor |
| | | 6 | Ground |
| | | 7 | Ground |
| PRES | MJ10 | 1 | Pressure Sensor Input |
| | | 2 | Ground |
| | | 3 | +15V |
| | | 4 | -15V |
| FLOW | MJ11 | 1 | Flow Sensor Input |
| | | 2 | Ground |
| | | 3 | +15V |
| | | 4 | -15V |
| | | 5 | Ground |
| LED | MJ14 | 1 | LED Drive |
| | | 2 | LED Supply |
| AMB TEMP | MJ15 | 1 | Ambient Temperature Thermistor |
| | | 2 | Ground |
| BENCH HEATER | NTJ1 | 1 | Bench Temperature Input |
| | | 2 | Ground |
| | | 3 | AC-HOT |
| | | 4 | Bench Heater AC |
| CONVERTER | MJ17 | 1 | Converter Temperature Input |
| | | 2 | Ground |
| | | 3 | Converter Heater On/Off |
| | | 4 | Ground |
| | | 5 | +15V |

| Connector Label | Reference Designator | Pin | Signal Description |
|---|---|---|---|
| | | 6 | -15V |
| 24V IN | P1 | 1 | +24V |
| | | 2 | Ground |
| AC PUMP | PJ5 | 1 | AC-HOT |
| | | 2 | AC-NEUT |
| | | 3 | AC-Ground |
| FAN | PJ4 | 1 | +24V |
| | | 2 | Ground |
| AC IN | PJ3 | 1 | AC-HOT |
| | | 2 | AC-NEUT |
| | | 3 | AC-Ground |
| AC CONVERTER | PJ12 | 1 | AC-HOT |
| | | 2 | AC-NEUT |
| | | 3 | AC-Ground |
| Z/S SOL. | PJ7 | 1 | +24V |
| | | 2 | Zero/Span Solenoid Control |
| SAMPLE SOL. | PJ8 | 1 | +24V |
| | | 2 | Sample Solenoid Control |
| CONV SOL. | PJ9 | 1 | +24V |
| | | 2 | Spare 1 Solenoid Control |
| SPAN2 SOL. | PJ10 | 1 | +24V |
| | | 2 | Spare 2 Solenoid Control |
| PERM OVEN THERM | POJ1 | 1 | Perm Oven Gas Thermistor |
| | | 2 | Ground |
| PERM OVEN | POJ3 | 1 | Perm Oven Heater On/Off |
| | | 2 | +15V Power |
| | | 3 | Perm Oven Heater Thermistor |
| | | 4 | Ground |

**Table 6–8.** Front Panel Board Connector Pin Diagram

| Connector Label | Reference Designator | Pin | Signal Description |
|---|---|---|---|
| MOTHER BOARD | J1 | 1 | Ground |
| | | 2 | Ground |
| | | 3 | LCLK – LCD Signal |
| | | 4 | Ground |
| | | 5 | Ground |
| | | 6 | LLP – LCD Signal |
| | | 7 | LFLM – LCD Signal |
| | | 8 | LD4 – LCD Signal |
| | | 9 | LD0 – LCD Signal |
| | | 10 | LD5 – LCD Signal |
| | | 11 | LD1 – LCD Signal |
| | | 12 | LD6 – LCD Signal |
| | | 13 | LD2 – LCD Signal |
| | | 14 | LD7 – LCD Signal |
| | | 15 | LD3 – LCD Signal |
| | | 16 | LCD Bias Voltage |
| | | 17 | +5V |
| | | 18 | Ground |
| | | 19 | Ground |
| | | 20 | LCD_ONOFF – LCD Signal |
| | | 21 | Keypad Row 2 Input |
| | | 22 | Keypad Row 1 Input |
| | | 23 | Keypad Row 4 Input |
| | | 24 | Keypad Row 3 Input |
| | | 25 | Keypad Col 2 Select |
| | | 26 | Keypad Col 1 Select |
| | | 27 | Keypad Col 4 Select |
| | | 28 | Keypad Col 3 Select |
| | | 29 | Ground |
| | | 30 | Ground |
| | | 31 | Ground |
| | | 32 | Ground |

| Connector Label | Reference Designator | Pin | Signal Description |
|---|---|---|---|
| | | 33 | +24V |
| | | 34 | +24V |
| LCD DATA | J2 | 1 | LD0_5V – LCD Signal |
| | | 2 | LD1_5V – LCD Signal |
| | | 3 | LD2_5V – LCD Signal |
| | | 4 | LD3_5V – LCD Signal |
| | | 5 | LCD_ONOFF_5V – LCD Signal |
| | | 6 | LFLM_5V – LCD Signal |
| | | 7 | NC |
| | | 8 | LLP_5V – LCD Signal |
| | | 9 | LCLK_5V – LCD Signal |
| | | 10 | +5V |
| | | 11 | Ground |
| | | 12 | -25V |
| | | 13 | LCD Bias Voltage |
| | | 14 | Ground |
| KEYBOARD | J3 | 1 | Keypad Row 1 Input |
| | | 2 | Keypad Row 2 Input |
| | | 3 | Keypad Row 3 Input |
| | | 4 | Keypad Row 4 Input |
| | | 5 | Keypad Col 1 Select |
| | | 6 | Keypad Col 2 Select |
| | | 7 | Keypad Col 3 Select |
| | | 8 | Keypad Col 4 Select |
| LCD BACKLIGHT | J4 | 1 | +5V Supply |
| | | 2 | NC |
| | | 3 | Ground |

**Table 6–9.** I/O Expansion Board (Optional) Connector Pin Descriptions

| Connector Label | Reference Designator | Pin | Signal Description |
|---|---|---|---|
| EXPANSION I/O | J1 | 1 | Analog Voltage Input 1 |
| | | 2 | Analog Voltage Input 2 |
| | | 3 | Analog Voltage Input 3 |
| | | 4 | Ground |
| | | 5 | Analog Voltage Input 4 |
| | | 6 | Analog Voltage Input 5 |
| | | 7 | Analog Voltage Input 6 |
| | | 8 | Ground |
| | | 9 | Analog Voltage Input 7 |
| | | 10 | Analog Voltage Input 8 |
| | | 11 | Ground |
| | | 12 | NC |
| | | 13 | Current Output Return |
| | | 14 | Ground |
| | | 15 | Current Output 1 |
| | | 16 | Current Output Return |
| | | 17 | Current Output 2 |
| | | 18 | Current Output Return |
| | | 19 | Current Output 3 |
| | | 20 | Current Output Return |
| | | 21 | Current Output 4 |
| | | 22 | Current Output Return |
| | | 23 | Current Output 5 |
| | | 24 | Current Output Return |
| | | 25 | Current Output 6 |
| MOTHER BD | J2 | 1 | +5V |
| | | 2 | +24V |
| | | 3 | +24V |
| | | 4 | Ground |
| | | 5 | Ground |
| | | 6 | Ground |
| | | 7 | +RS485 to Motherboard |
| | | 8 | -RS485 to Motherboard |

**Table 6–10.** Digital Output Board Connector Pin Descriptions

| Connector Label | Reference Designation | Pin | Signal Description |
|---|---|---|---|
| MOTHER BD | J1 | 1 | +5V |
| | | 2 | +24V |
| | | 3 | +24V |
| | | 4 | Ground |
| | | 5 | Ground |
| | | 6 | Ground |
| | | 7 | SPI Reset |
| | | 8 | SPI Input |
| | | 9 | SPI Output |
| | | 10 | SPI Board Select |
| | | 11 | SPI Clock |
| DIGITAL OUTPUTS | J2 | 1 | Relay 1 Contact a |
| | | 2 | Relay 2 Contact a |
| | | 3 | Relay 3 Contact a |
| | | 4 | Relay 4 Contact a |
| | | 5 | Relay 5 Contact a |
| | | 6 | Relay 6 Contact a |
| | | 7 | Relay 7 Contact a |
| | | 8 | Relay 8 Contact a |
| | | 9 | Relay 9 Contact a |
| | | 10 | Relay 10 Contact a |
| | | 11 | NC |
| | | 12 | Solenoid Drive Output 1 |
| | | 13 | Solenoid Drive Output 2 |
| | | 14 | Solenoid Drive Output 3 |
| | | 15 | Solenoid Drive Output 4 |
| | | 16 | Solenoid Drive Output 5 |
| | | 17 | Solenoid Drive Output 6 |
| | | 18 | Solenoid Drive Output 7 |
| | | 19 | Solenoid Drive Output 8 |
| | | 20 | Relay 1 Contact b |
| | | 21 | Relay 2 Contact b |

| Connector Label | Reference Designation | Pin | Signal Description |
|---|---|---|---|
| | | 22 | Relay 3 Contact b |
| | | 23 | Relay 4 Contact b |
| | | 24 | Relay 5 Contact b |
| | | 25 | Relay 6 Contact b |
| | | 26 | Relay 7 Contact b |
| | | 27 | Relay 8 Contact b |
| | | 28 | Relay 9 Contact b |
| | | 29 | Relay 10 Contact b |
| | | 30 | +24V |
| | | 31 | +24V |
| | | 32 | +24V |
| | | 33 | +24V |
| | | 34 | +24V |
| | | 35 | +24V |
| | | 36 | +24V |
| | | 37 | +24V |

**Table 6–11.** Input Board Connector Pin Descriptions

| Connector Label | Reference Designator | Pin | Signal Description |
|---|---|---|---|
| PMT IN | J1 | 1 | PMT Input |
| | | 2 | Ground |
| INTF BD | J2 | 1 | +15V |
| | | 2 | Ground |
| | | 3 | -15V |
| | | 4 | +5V |
| | | 5 | Ground |
| | | 6 | Measurement Frequency Output |
| | | 7 | Sample Hold |
| | | 8 | NC |
| | | 9 | Gain A |
| | | 10 | Gain B |

**Table 6–12.** Flash Trigger Pack Pin Descriptions

| Connector Label | Reference Designator | Pin | Signal Description |
|---|---|---|---|
| FLASH TRIG | TO J01 | 1 | Flash Voltage |
| | | 2 | Flash Trigger |
| | | 3 | Ground |

**Table 6–13.** Flash Intensity Assembly Pin Descriptions

| Connector Label | Reference Designator | Pin | Signal Description |
|---|---|---|---|
| FLASH INT | | 1 | +15V |
| | | 2 | -15V |
| | | 3 | Ground |
| | | 4 | Lamp Intensity |

**Table 6–14.** Converter Interface Board

| Connector Label | Reference Designator | Pin | Signal Description |
|---|---|---|---|
| Ext RS485 Interface (Not labelled on board) | J1 | 1 | -RS485 from Analyzer |
| | | 2 | +RS485 from Analyzer |
| | | 3 | +5V |
| | | 4 | +5V |
| | | 5 | +5V |
| | | 6 | Ground |
| | | 7 | Ground |
| | | 8 | Ground |
| | | 9 | N.C. |
| | | 10 | N.C. |
| | | 11 | +24V |
| | | 12 | +24V |
| | | 13 | +24V |
| | | 14 | +24V |
| | | 15 | +24V |
| Ext Amb Temp (Not labelled on board) | J2 | 1 | External Ambient Temperature Thermocouple-Pos |

| Connector Label | Reference Designator | Pin | Signal Description |
|---|---|---|---|
| | | | Input |
| | | 2 | External Ambient Temperature Thermocouple-Neg Input |
| PRES | J3 | 1 | Pressure Sensor Input |
| | | 2 | Ground |
| | | 3 | +15V |
| | | 4 | -15V |
| TEMP CTRL | J4 | 1 | Conv Temp-Btm Input |
| | | 2 | Ground |
| | | 3 | -15V |
| | | 4 | Converter Control Output |
| | | 5 | Conv Temp-Top Input |
| | | 6 | +15V |
| FAN1 | J5 | 1 | +24V |
| | | 2 | Ground |
| FAN2 | J6 | 1 | +24V |
| | | 2 | Ground |
| S/C/BYP | J7 | 1 | +24V |
| | | 2 | S/C/BYP Solenoid Control |
| Z/C/CAL | J8 | 1 | +24V |
| | | 2 | Z/C/CAL Solenoid Control |
| FLOW | J9 | 1 | Flow Sensor Input |
| | | 2 | Ground |
| | | 3 | +15V |
| | | 4 | -15V |
| | | 5 | Ground |

**Table 6–15.** Converter Temperature Control CONV BTM Board

| Connector Label | Reference Designator | Pin | Signal Description |
|---|---|---|---|
| CONV BTM | J1 | 1 | Converter Thermocouple-Btm-Pos Input |
| | | 2 | Converter Thermocouple-Btm-Neg Input |
| CONV TOP | J2 | 1 | Converter Thermocouple-Top-Pos Input |
| | | 2 | Converter Thermocouple-Top-Neg Input |
| INTF | J3 | 1 | Conv Temp-Btm Output |
| | | 2 | Ground |
| | | 3 | -15V |
| | | 4 | Converter Control Input |
| | | 5 | Conv Temp-Top Output |
| | | 6 | +15V |
| AC IN | J4 | 1 | AC INPUT - A |
| | | 2 | AC INPUT - B |
| AC PUMP | J5 | 1 | PUMP AC Output |
| | | 2 | PUMP AC Return |
| | | 3 | Chassis Ground |
| HEATER 1 | J6 | 1 | HEATER 1 AC - Output |
| | | 2 | HEATER 1 AC Return |
| HEATER 2 | J7 | 1 | HEATER 2 AC Output |
| | | 2 | HEATER 2 AC Return |
| TH. FUSE | J8 | 1 | Thermal Fuse AC Output |
| | | 2 | Thermal Fuse AC Return |

## Service Locations

For additional assistance, service is available from exclusive distributors worldwide. Contact one of the phone numbers below for product support and technical information or visit us on the web at www.thermo.com/aqi.

1-866-282-0430 Toll Free

1-508-520-0430 International

# Chapter 7
# Servicing

This chapter explains how to replace the Model 5020*i* subassemblies. It assumes that a subassembly has been identified as defective and needs to be replaced or is an expendable item needing periodic maintenance not covered under warranty. Expendable items are indicated with an asterisk (*) in the "Model 5020*i* Analyzer Replacement Parts" table and the "Model 5020*i* Converter Replacement Parts" table.

For fault location information refer to the "Preventive Maintenance" chapter and the "Troubleshooting" chapter in this manual.

The service mode, described in the "Operation" chapter, includes parameters and functions that are useful when making adjustments or diagnosing problems.

For additional service assistance, see "Service Locations" at the end of this chapter.

## Safety Precautions

Read the safety precautions before beginning any procedures in this chapter.

**WARNING** The service procedures in this manual are restricted to qualified representatives. ▲

If the equipment is operated in a manner not specified by the manufacturer, the protection provided by the equipment may be impaired. ▲

**CAUTION** Carefully observe the instructions in each procedure. ▲

(**Figure 7–1**)

**Equipment Damage** Some internal components can be damaged by small amounts of static electricity. A properly ground antistatic wrist strap

(**Figure 7–1**) must be worn while handling any internal component. If an antistatic wrist strap is not available, be sure to touch the instrument chassis before touching any internal components. When the instrument is unplugged, the chassis is not at earth ground. ▲

DO NOT point the photomultiplier tube at a light source. This can permanently damage the tube. ▲

DO NOT attempt to clean the mirrors in the optical bench. These mirrors do not come in contact with the sample gas and should not be cleaned. Cleaning the mirrors can damage the mirrors. ▲

Handle all printed circuit boards by the edges. ▲

Do not remove the LCD panel or frame from the LCD module. ▲

The polarizing plate is very fragile, handle it carefully. ▲

Do not wipe the polarizing plate with a dry cloth, it may easily scratch the plate. ▲

Do not use alcohol, acetone, MEK or other Ketone based or aromatic solvents to clean the LCD module, use a soft cloth moistened with a naphtha cleaning solvent. ▲

Do not place the LCD module near organic solvents or corrosive gases. ▲

Do not shake or jolt the LCD module. ▲

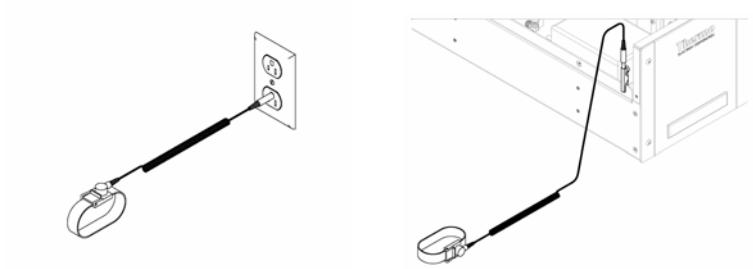

**Figure 7–1.** Properly Grounded Antistatic Wrist Strap

## Firmware Updates

The firmware can be updated by the user in the field via the serial port or over the Ethernet. This includes both the main processor firmware and the firmware in all low-level processors. Refer to the *iPort* manual for the firmware update procedure.

## Accessing the Service Mode

If the Service Menu is not displayed on the Main Menu, use the following procedure to display it.

**Note** While in the Service mode, some features, such as auto-cal will not function. Service mode should be set OFF for normal operation. ▲

1. At the Main Menu, press [↓] to scroll to Instrument Controls > press [↵] > [↓] to scroll to **Service Mode** > and press [↵].

   The Service Mode screen appears.

2. Press [↵] to toggle the Service mode to ON.

3. Press [■] > [■] to return to the Main Menu.

4. Return to the procedure.

## Analyzer Replacement Parts List

**Table 7–1** lists the analyzer replacement parts for the Model 5020*i* major subassemblies. Refer to **Figure 7–2** to identify the component location.

**Table 7–1.** Model 5020*i* Analyzer Replacement Parts

| Part Number | Description |
|---|---|
| 100480-00 | Front Panel Pushbutton Board |
| 101491-20 | Processor Board |
| 100533-00 | Motherboard Assembly |
| 100539-00 | Digital Output Board |
| 100542-00 | I/O Expansion Board (Optional) |
| 102340-00 | Front Panel Connector Board |
| 102496-00 | Front Panel Display |
| 101399-00 | Transformer, Step-Down, 220-240V (Optional) |
| 101863-00 | Transformer, 100V, Step-up Transformer (Optional) |
| 100862-00 | Measurement Interface Board Assembly |
| 100883-00 | Input Board Assembly |
| 8392 | Trigger Pack Assembly |
| 101023-00 | Pressure Transducer Assembly |
| 102055-00 | Flow Transducer |

| Part Number | Description |
|---|---|
| 8666 | Flash Lamp |
| 8884 | Flash Intensity (PhotoceIl) Assembly |
| 8391 | Photomultiplier Tube (PMT) |
| 101024-00 | PMT High Voltage Power Supply |
| 100727-00 | PMT Base Socket Assembly |
| 101426-00 | Pump 110VAC w/Plate |
| 8606 | Pump Repair Kit (for 101426-00)* |
| 4510 | Fuse, 250VAC, 3.0 Amp, SlowBlow (for 100VAC and 110VAC models)* |
| 14007 | Fuse, 250VAC, 1.60 Amp, SlowBlow (for 220-240VAC models)* |
| 101681-00 | Power Supply Assembly, 24VDC, w/Base Plate and Screws |
| 101688-00 | Ambient Internal Temperature Thermistor with Connector |
| Contact manufacturer | Dynacal Permeation Wafer Device, #147-693-0082-C45, size 90F3, permeation rate 45.5 ng/min at ± 5% at 45 °C*<br>Contact Vici Metronics (360) 697-9199 |
| 100907-00 | Fan, 24VDC |
| 8630 | Filter Guard Assembly (w/foam filter)* |
| 8919 | Capillary, 0.013-inch ID (~0.5 LPM flow rate standard) |
| 4800 | Capillary O-ring |
| 4119 | Capillary, 0.008-inch ID (Perm Oven Option) |

*Expendable item not covered by warranty period.

## Cable List

**Table 7–2** describes the Model 5020*i* cables. See the "Troubleshooting" chapter for associated connection diagrams and board connector pin descriptions.

**Table 7–2.** Model 5020*i* Cables

| Part Number | Description |
|---|---|
| 101036-00 | DC Power Supply, 24V Output |
| 101037-00 | 115VAC Supply to Measurement Interface Board |
| 101048-00 | RS-485/Data |
| 101038-00 | Power Switch to Motherboard |
| 101364-00 | DC Power Supply Status Monitor |
| 101054-00 | Motherboard to Front Panel Board |
| 101035-00 | DC Power Supply AC Input |

| Part Number | Description |
|---|---|
| 101033-00 | AC from Receptacle |
| 101377-00 | AC to Power Switch |
| 101355-01 | Signal Output Ribbon |
| 101695-00 | Permeation Oven (Option) |
| 101055-00 | Main AC Receptacle Assembly |
| 103233-00 | Thermal Fuse |
| 101346-00 | Temperature Control |
| 101366-00 | Sample Flow Sensor |
| 101368-00 | Pressure Sensor |
| 103214-00 | AC to Temperature Control Board |
| 101267-00 | Fan Power Cable |

## External Device Connection Components

**Table 7–3** lists the standard and optional cables and components used for connecting external devices such as PCs and data loggers to an *i*Series instrument.

**Table 7–3.** External Device Connection Components

| Part Number | Description |
|---|---|
| 102562-00 | Terminal Block and Cable Kit (DB25) (optional) |
| 102556-00 | Terminal Block and Cable Kit (DB37) (optional) |
| 102645-00 | Cable, DB37M to Open End, Six Feet (optional) |
| 102646-00 | Cable, DB37F to Open End, Six Feet (optional) |
| 102659-00 | Cable, DB25M to Open End, Six Feet (optional) |
| 6279 | Cable, RS-232 (optional) |
| 102888-00 | Terminal Board PCB Assembly, DB37F (standard with all instruments) |
| 102891-00 | Terminal Board PCB Assembly, DB37M (standard with all instruments) |
| 103084-00 | Terminal Board PCB Assembly, DB25M (included with optional I/O Expansion Board in all instruments) |

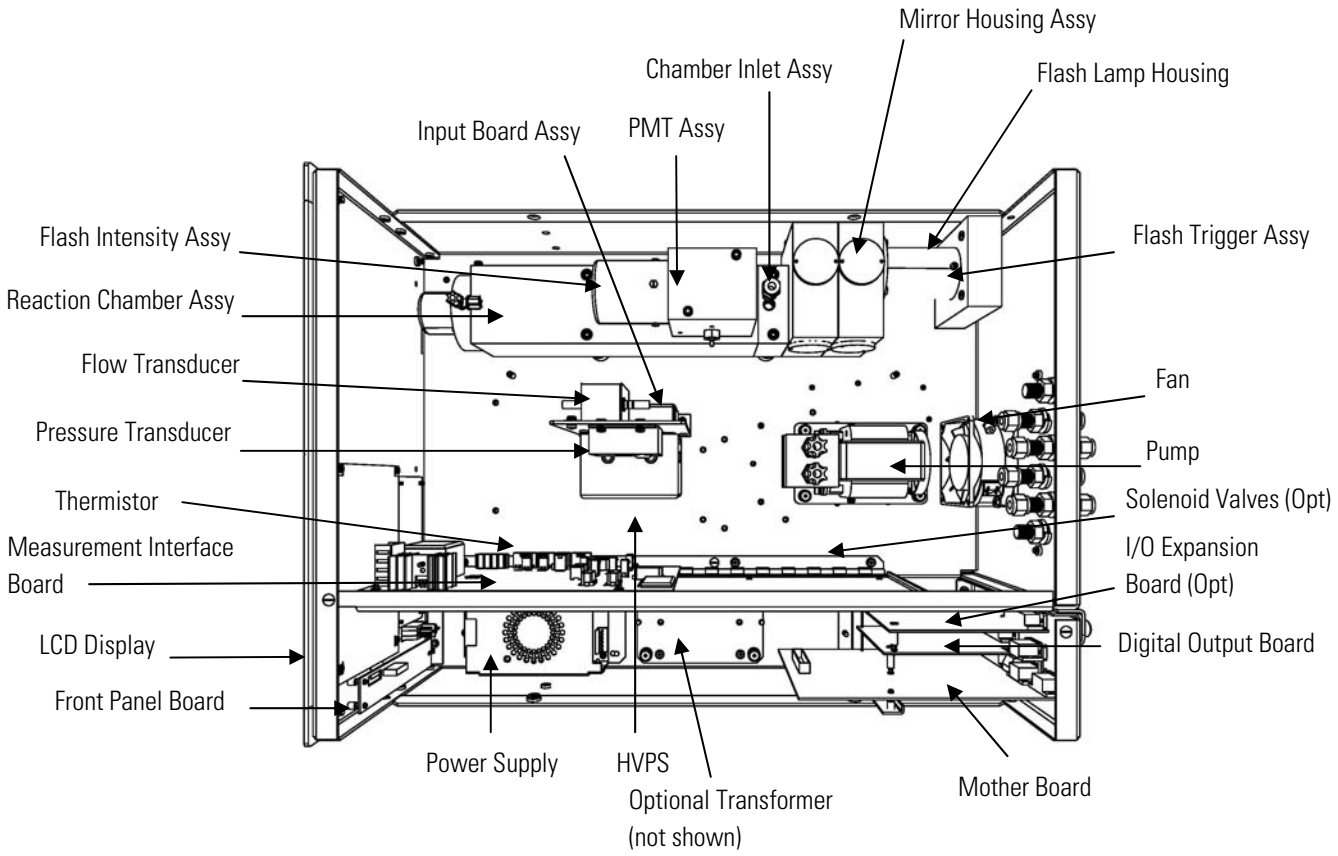


**Figure 7–2.** Model 5020*i* Analyzer Component Layout

## Removing the Measurement Bench and Lowering the Partition Panel

The measurement bench can be removed and the partition panel can be lowered to improve access to connectors and components. Refer to the following steps when a procedure requires lowering the partition panel (**Figure 7–3**).

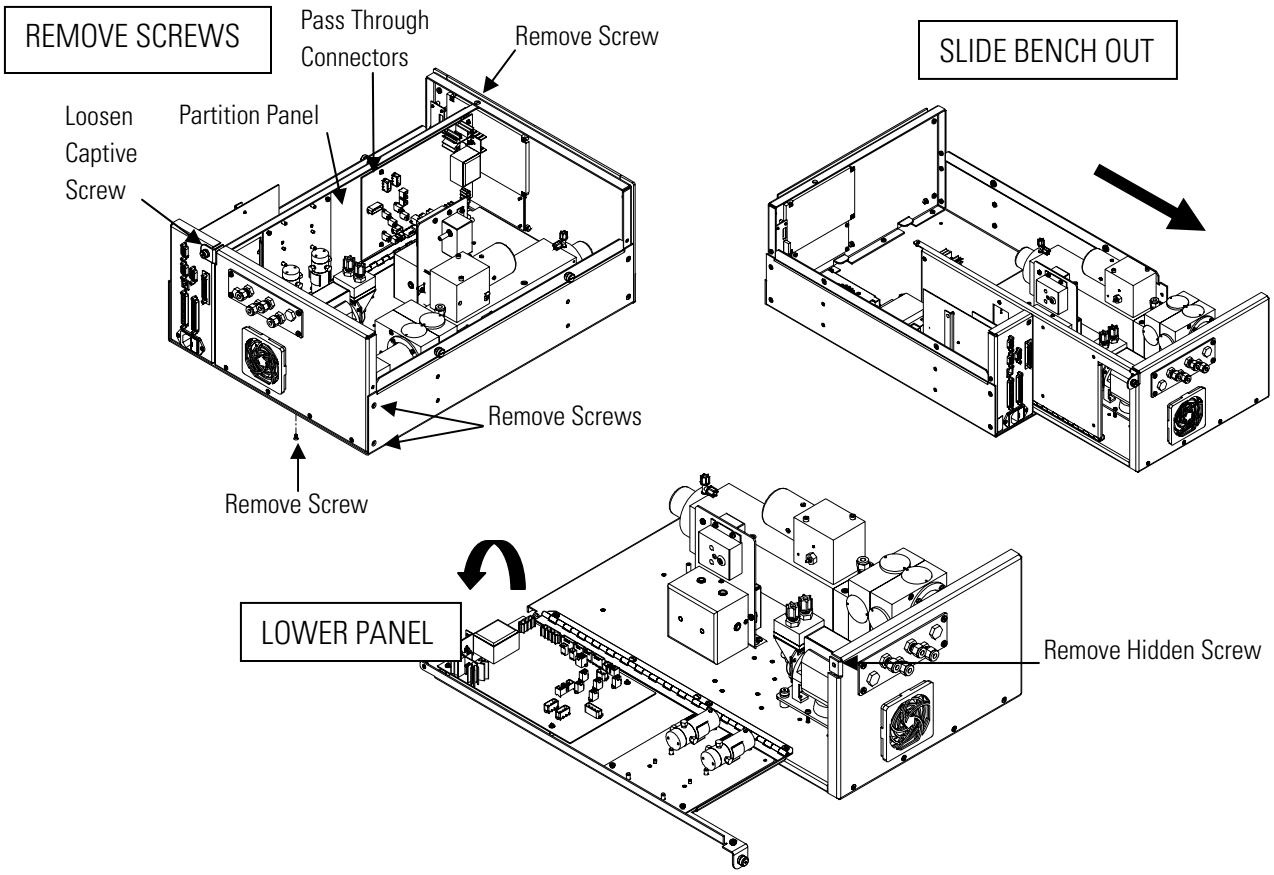


**Figure 7–3.** Removing the Measurement Bench and Lowering the Partition Panel

Equipment Required:

Philips screwdriver

**Equipment Damage** Some internal components can be damaged by small amounts of static electricity. A properly ground antistatic wrist strap must be worn while handling any internal component. If an antistatic wrist strap is not available, be sure to touch the instrument chassis before touching any internal components. When the instrument is unplugged, the chassis is not at earth ground. ▲

1. Turn instrument OFF and unplug the power cord.

2. If the instrument is mounted in a rack, remove it from the rack.

3. Remove the cover.

4. Disconnect the plumbing connections at the rear of the measurement bench.

5. Disconnect the connectors that pass through the center of the partition panel.

6. Remove two screws from the left side of the case (viewed from front).

7. Remove one screw from the bottom rear of the case.

8. Remove one screw from the top front of the partition panel.

9. While holding the case securely, loosen the captive screw at the rear of the measurement bench, and pull the measurement bench from the rear of the case.

10. Remove the screw at the top rear of the partition panel securing the top of partition panel to the measurement bench, and lower the panel being careful not to put excessive tension on the cables.

11. Replace the measurement bench by following previous steps in reverse.

## Analyzer Fuse Replacement

Use the following procedure to replace the analyzer fuse.

Equipment Required:

Replacement fuses (refer to the "Model 5020*i* Analyzer Replacement Parts" table in this chapter).

1. Turn instrument OFF and unplug the power cord.

2. Remove fuse drawer, located on the AC power connector.

3. If either fuse is blown, replace both fuses.

4. Insert fuse drawer and reconnect power cord.

## Analyzer Pump Replacement

Use the following procedure to replace the analyzer pump (**Figure 7–4**). To rebuild the pump, see “Pump Rebuilding” in the “Preventive Maintenance” chapter.

Equipment Required:

Pump

Philips screwdriver

**Equipment Damage** Some internal components can be damaged by small amounts of static electricity. A properly ground antistatic wrist strap must be worn while handling any internal component. If an antistatic wrist strap is not available, be sure to touch the instrument chassis before touching any internal components. When the instrument is unplugged, the chassis is not at earth ground. ▲

1. Turn instrument OFF, unplug the power cord, and remove the cover.
2. Disconnect the pump power cable from the AC PUMP connector on the measurement interface board.
3. Remove both lines from the pump.
4. Loosen the four captive screws holding the pump bracket to the shock mounts and remove the pump assembly.

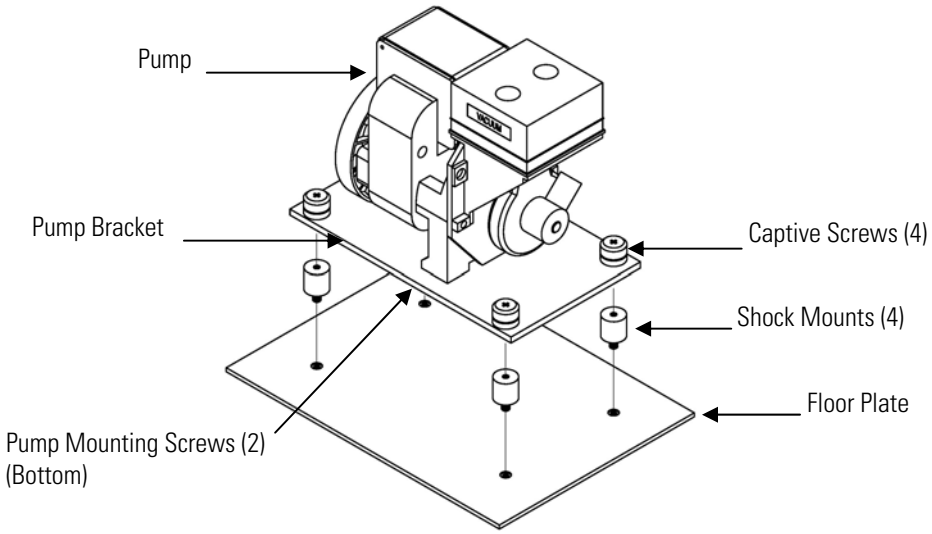


**Figure 7–4.** Replacing the Pump

5. Install the new pump by following the previous steps in reverse.

6. Perform a leak test as described in the “Preventive Maintenance” chapter.

## Analyzer Fan/Filter Replacement

Use the following procedure to replace the analyzer fan and the filter (**Figure 7–5**).

Equipment Required:

Fan

Fan filter

Philips screwdriver

**Equipment Damage** Some internal components can be damaged by small amounts of static electricity. A properly ground antistatic wrist strap must be worn while handling any internal component. If an antistatic wrist strap is not available, be sure to touch the instrument chassis before touching any internal components. When the instrument is unplugged, the chassis is not at earth ground. ▲

1. Turn instrument OFF, unplug the power cord, and remove the cover.

2. Remove the fan guard and filter from the rear of the instrument by unsnapping it.

3. If the fan is not being replaced, install the new filter, snap it into place, and skip the remaining steps.

4. Disconnect the fan power cable from the fan.

5. Remove the four fan mounting screws along with nuts and washers and remove the fan.

6. Install a new fan following the previous steps in reverse order.

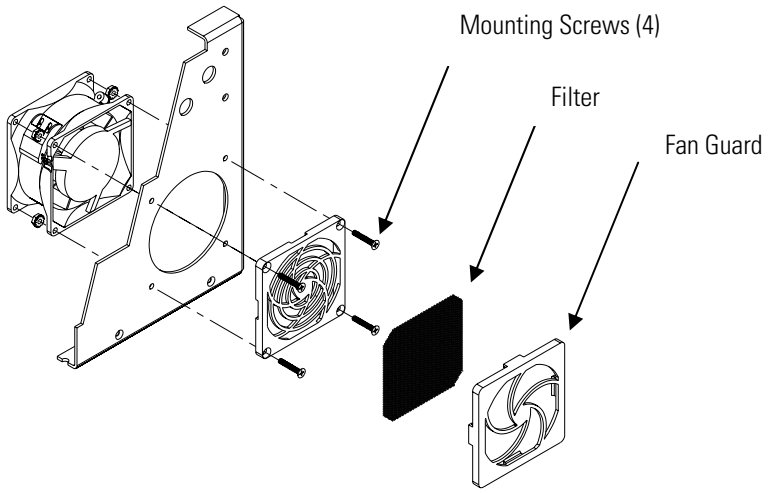


**Figure 7–5.** Replacing the Fan

## Flash Lamp Replacement

Use the following procedure to replace the flash lamp.

Equipment Required:

Analyzer flash Lamp

Screwdriver

**Equipment Damage** Some internal components can be damaged by small amounts of static electricity. A properly ground antistatic wrist strap must be worn while handling any internal component. If an antistatic wrist strap is not available, be sure to touch the instrument chassis before touching any internal components. When the instrument is unplugged, the chassis is not at earth ground. ▲

**CAUTION** Do not touch the front window of the lamp. If this happens, wash the lamp with laboratory cleaning solution and dry before replacement. ▲

1. Turn the instrument OFF, unplug the power cord, and remove the instrument cover.

2. Release the four latch fasteners and remove the instrument cover.

3. Remove the access panel from the rear panel of the analyzer.

4. Locate the lamp housing and the trigger pack (see **Figure 7–2**).

5. Disconnect the three-pin connector from the flasher supply board.

6. Loosen the single screw on the lamp housing.

7. Pull out the trigger pack and lamp from the lamp housing.

8. Insert the new lamp in socket.

9. Follow the above procedure in reverse, making sure all connectors and screws are tight.

10. Follow the "Flash Lamp Voltage Adjustment" procedure in this chapter.

11. Re-install the instrument cover.

## Flash Lamp Voltage Adjustment

Use the following procedure to adjust the flash lamp voltage.

**Note** The service procedures in this manual are restricted to qualified service representatives. ▲

1. From the Main Menu, press [↓] to scroll to **Service** > press [↵] > [↓] to scroll to **Flash Voltage Adjustment** > and press [↵].

   The Set Flash Voltage screen appears.

**Note** If Service Mode is not displayed, refer to "Accessing the Service Mode" in this chapter, then return to the beginning of this step. ▲

2. At the Set Flash Voltage screen, use [↑] [↓] until the SUPPLY voltage is 1000V.

3. Press [↵] to store the value.

4. Perform a PMT Voltage Adjustment, and recalibrate the instrument. Refer to “PMT Voltage Adjustment” in this chapter and the calibration procedures in the “Calibration” chapter.

## Optical Bench Replacement

Use the following procedure to replace the optical bench (**Figure 7–6**).

Equipment Required:

Allen wrench, 5/32-inch

Philips screwdriver

**Equipment Damage** Some internal components can be damaged by small amounts of static electricity. A properly ground antistatic wrist strap must be worn while handling any internal component. If an antistatic wrist strap is not available, be sure to touch the instrument chassis before touching any internal components. When the instrument is unplugged, the chassis is not at earth ground. ▲

1. Turn instrument OFF, unplug the power cord, and remove the cover.

2. Disconnect the electrical cables from the optical bench:

3. Disconnect the optical bench plumbing.

4. Using a 5/32-inch Allen wrench, remove the four optical bench retaining screws, and lift the optical bench off the floor plate.

5. Replace the optical bench by following the previous steps in reverse order.

6. Calibrate the instrument. Refer to the “Calibration” chapter in this manual.

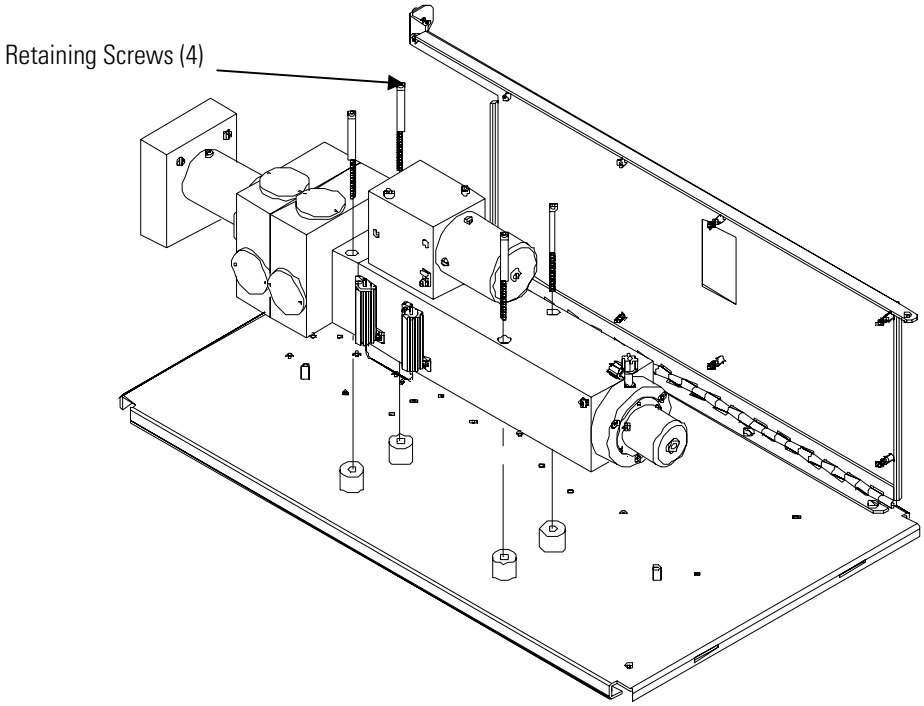


**Figure 7–6.** Replacing the Optical Bench

## Cleaning the Mirrors

The mirrors located in the optical bench do not come in contact with the sample gas and DO NOT need cleaning. Read the Equipment Damage warning that follows.

**Equipment Damage** DO NOT attempt to clean the mirrors in the optical bench. These mirrors do not come in contact with the sample gas and should not be cleaned. Cleaning the mirrors can damage the mirrors. ▲

## Flash Trigger Assembly Replacement

Use the following procedure to replace the flash trigger assembly (**Figure 7–7**).

Equipment Required:

Flash trigger assembly

Philips screwdriver

**Equipment Damage** Some internal components can be damaged by small amounts of static electricity. A properly ground antistatic wrist strap must be worn while handling any internal component. If an antistatic wrist strap

is not available, be sure to touch the instrument chassis before touching any internal components. When the instrument is unplugged, the chassis is not at earth ground. ▲

1. Turn instrument OFF, unplug the power cord, and remove the cover.

2. Disconnect the flash trigger cable from the FLASH TRIG connector on the measurement interface board.

3. Remove the bench (see "Optical Bench Replacement" in this chapter).

4. Loosen the retaining screw on the top of the lamp housing and pull out the trigger assembly and lamp.

5. Remove the lamp from the trigger assembly by pulling straight out and insert the lamp into the new trigger assembly.

6. Insert the new flash trigger assembly into the lamp housing, tighten the retaining screw, and reconnect the flash trigger cable.

7. Re-install the bench.

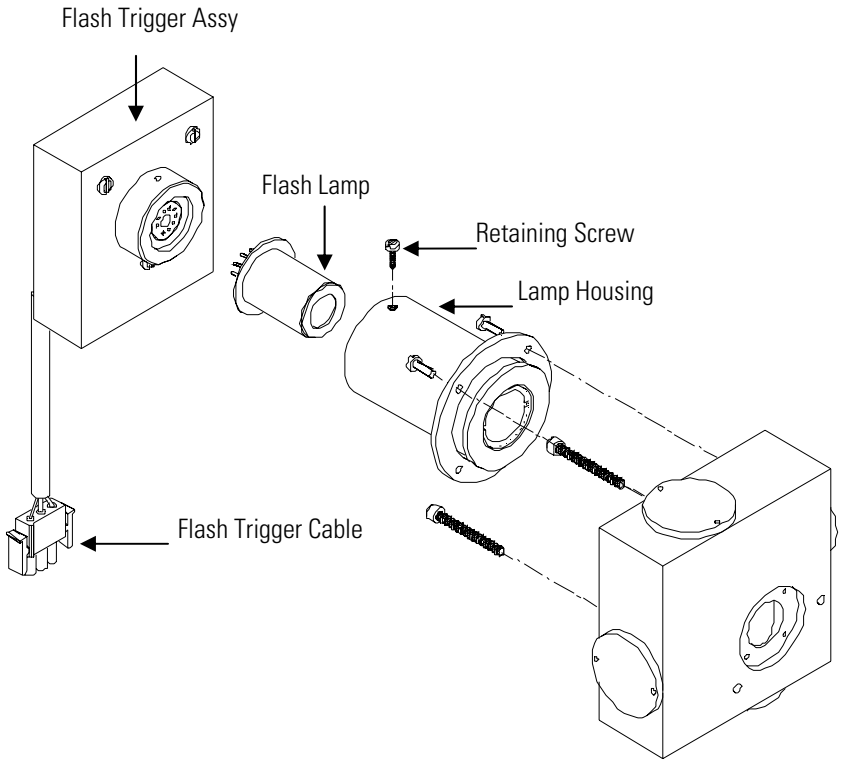


**Figure 7–7.** Replacing the Flash Lamp and Flash Trigger Assembly

## Flash Intensity Assembly Replacement

Use the following procedure to replace the flash intensity assembly.

Equipment Required:

Flash intensity assembly

Philips screwdriver, small

**Equipment Damage** Some internal components can be damaged by small amounts of static electricity. A properly ground antistatic wrist strap must be worn while handling any internal component. If an antistatic wrist strap is not available, be sure to touch the instrument chassis before touching any internal components. When the instrument is unplugged, the chassis is not at earth ground. ▲

1. Turn instrument OFF, unplug the power cord, and remove the cover.

2. Disconnect the flash intensity cable from the FLASH INT connector on the measurement interface board.

3. Remove the three screws securing the flash intensity assembly to the reaction chamber (**Figure 7–8**).

4. Install the new flash intensity assembly by following this procedure in reverse.

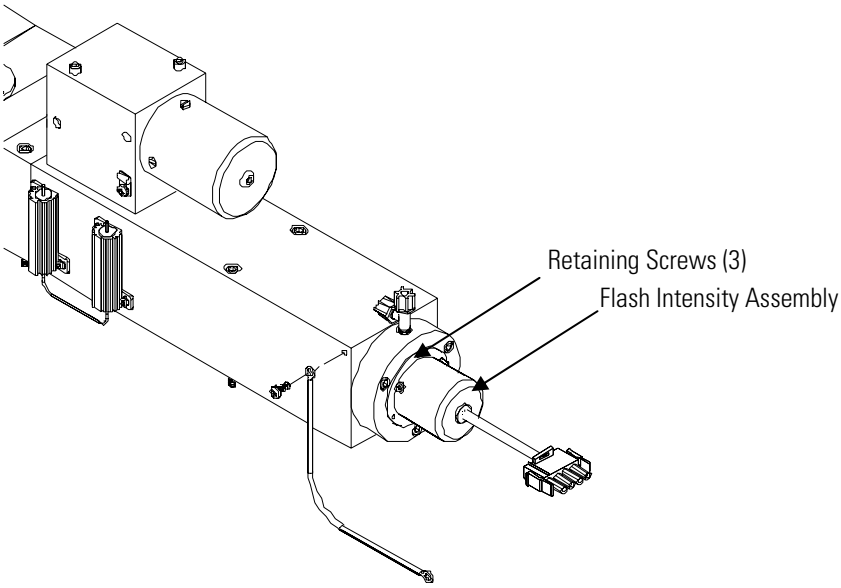


**Figure 7–8.** Replacing the Flash Intensity Assembly

## Photomultiplier Tube Replacement

Use the following procedure to replace the photomultiplier tube.

Equipment Required:

Photomultiplier tube

Philips screwdriver

**Equipment Damage** Some internal components can be damaged by small amounts of static electricity. A properly ground antistatic wrist strap must be worn while handling any internal component. If an antistatic wrist strap is not available, be sure to touch the instrument chassis before touching any

internal components. When the instrument is unplugged, the chassis is not at earth ground. ▲

1. Turn analyzer OFF, unplug the power cord, and remove the cover.

2. Disconnect the high voltage cable from the PMT power supply cable connector and unplug the BNC cable from the input board connector.

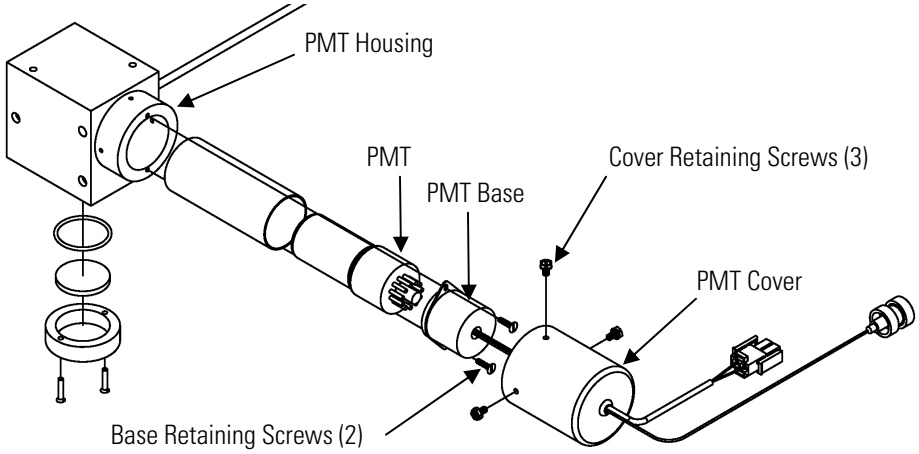


**Figure 7–9.** Replacing the PMT

3. Remove the three retaining screws holding the PMT cover to the PMT housing, and pull back the cover to access the two PMT base retaining screws.

4. Pull PMT and PMT base from the PMT housing by twisting it slightly back and forth.

5. To install a new PMT, follow previous steps in reverse.

6. Perform a photomultiplier tube calibration. See “PMT Voltage Adjustment” in this chapter.

# PMT High Voltage Power Supply Replacement

Use the following procedure to replace the PMT high voltage power supply (HVPS) (**Figure 7–10**).

Equipment Required:

PMT high voltage power supply (HVPS)

Philips screwdriver

**Equipment Damage** Some internal components can be damaged by small amounts of static electricity. A properly ground antistatic wrist strap must be worn while handling any internal component. If an antistatic wrist strap is not available, be sure to touch the instrument chassis before touching any internal components. When the instrument is unplugged, the chassis is not at earth ground. ▲

1. Turn instrument OFF, unplug the power cord, and remove the cover.

2. Disconnect the two PMT high voltage supply cables.

3. Loosen the two retaining screws securing the power supply bracket to the floor plate and slide the power supply towards the rear slightly and lift it off the base screws.

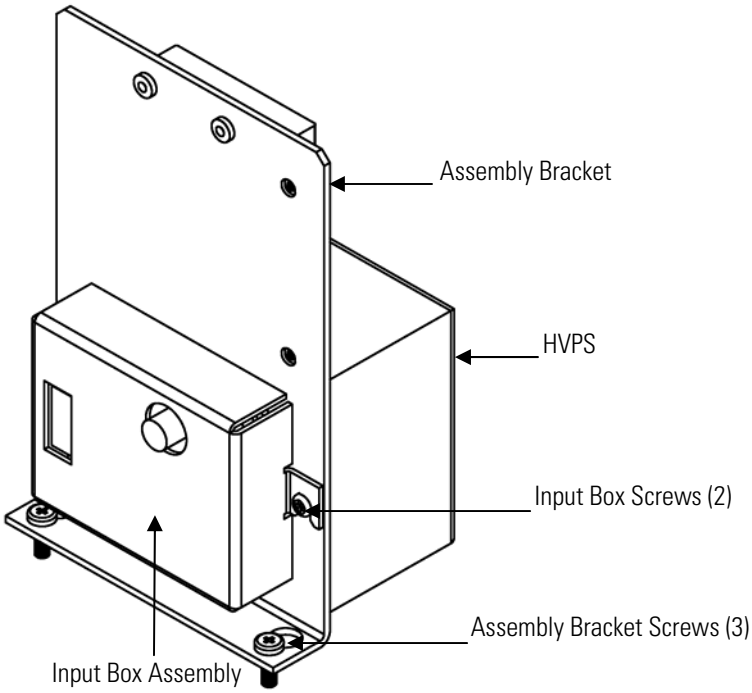


**Figure 7–10.** Replacing the PMT High Voltage Power Supply (HVPS)

4. Loosen two screws on the input box assembly and lift the input box assembly off the bracket.

5. Remove the four screws securing the power supply to the bracket and remove the power supply.

6. To install the power supply, follow the previous steps in reverse.

7. Recalibrate the instrument. Refer to the calibration procedures in the "Calibration" chapter.

## PMT Voltage Adjustment

Use the following procedure to adjust the PMT voltage after replacing the PMT high voltage power supply.

**Note:** The service procedures in this manual are restricted to qualified service representatives. ▲

1. From the Main Menu, press [↓] to scroll to Calibration Factors > press [↵] >at **SO2 BKG** press [↵]. Refer to "Calibration Factors Menu" in the "Operation" chapter.

The SO2 Background screen appears.

2. Use [↑] [↓] to reset the $SO_2$ BKG to 0.00, and press [↵] to save the value.

3. Press [■] to return to the Calibration Factors menu, scroll to **SO2 COEF** and press [↵]. Refer to "Calibration Factors Menu" in the "Operation" chapter.

   The SO2 Coefficient screen appears.

4. Use [↑] [↓] to reset the $SO_2$ COEF to 1.000, and press [↵] to save the value.

5. Press the AVG soft key to display the Averaging Time screen and set the Averaging Time to 10 seconds. Refer to "Averaging Time" in the "Operation" chapter.

6. Connect the calibration gas and allow the instrument to sample calibration gas until the reading stabilizes.

7. From the Main Menu, press [↓] to scroll to **Service** > press [↵] > [↓] to scroll to **PMT Supply Settings** > and press [↵].

   The Set PMT Voltage screen appears.

**Note** If Service Mode is not displayed, refer to "Accessing the Service Mode" in this chapter, then return to the beginning of this step. ▲

8. At the Set PMT Voltage screen, use [↑] [↓] to increment/decrement the counts until the instrument displays the calibration gas concentration value.

## DC Power Supply Replacement

Use the following procedure to replace the DC power supply (**Figure 7–2** and **Figure 7–11**).

Equipment Required:

DC power supply

Philips screwdriver

**Equipment Damage** Some internal components can be damaged by small amounts of static electricity. A properly ground antistatic wrist strap must be worn while handling any internal component. If an antistatic wrist strap is not available, be sure to touch the instrument chassis before touching any internal components. When the instrument is unplugged, the chassis is not at earth ground. ▲

1. Turn instrument OFF, unplug the power cord, and remove the cover.

2. Disconnect all the power supply electrical connections. Note connector locations to facilitate re-connection.

3. Loosen the captive screw securing the power supply to the chassis plate and lift out the power supply.

4. To install the DC power supply, follow the previous steps in reverse.

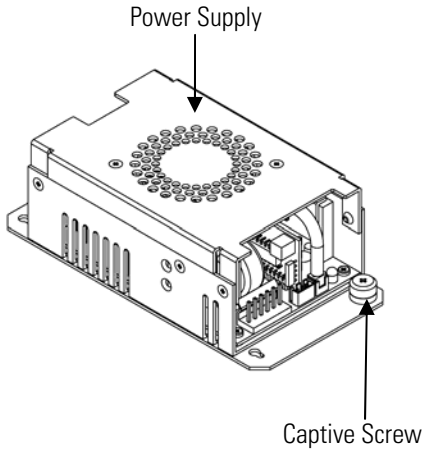


**Figure 7–11.** Replacing the DC Power Supply

## Analog Output Testing

The analog outputs should be tested if the concentration value on the front panel display disagrees with the analog outputs. To check the analog outputs, you connect a meter to an analog output channel (voltage or current) and compare the meter reading with the output value displayed on the Test Analog Outputs screen.

Equipment Required:

Multimeter

Use the following procedure to test the analog outputs.

1. Connect a meter to the channel to be tested. **Figure 7–12** shows the analog output pins and **Table 7–4** identifies the associated channels.

2. From the Main Menu, press [↓] to scroll to Diagnostics, press [↵] > [↓] to scroll to Test Analog Outputs, and press [↵].

   The Test Analog Outputs screen displays.

3. Press [↓] to scroll to the desired channel corresponding to the rear panel terminal pins where the meter is connected, and press [↵].

   The Set Analog Outputs screen displays.

4. Press [↓] to set the output to zero.

   The Output Set To line displays Zero.

5. Check that the meter is displaying a zero value. If the meter reading differs by more than one percent of the desired full scale, the analog outputs should be adjusted. Refer to the "Analog Output Calibration" procedure that follows.

6. Press [↑] to set the output to full scale.

   The Output Set To line displays Full Scale.

7. Check that the meter is displaying the full scale value. If the meter reading differs by more than one percent of the desired full scale, the analog outputs should be adjusted. Refer to the "Analog Output Calibration" procedure that follows.

8. Press [←] to reset the analog outputs to normal.

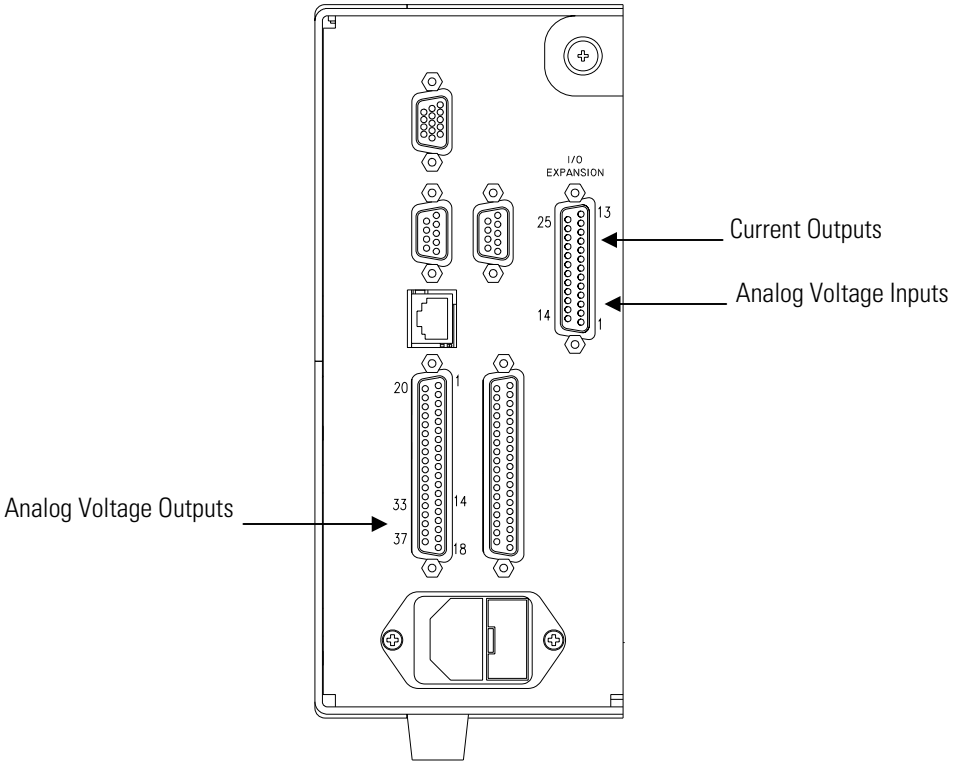


**Figure 7–12.** Rear Panel Analog Input and Output Pins

**Table 7–4.** Analog Output Channels and Rear Panel Pin Connections

| Voltage Channel | Pin | Current Channel | Pin |
|---|---|---|---|
| 1 | 14 | 1 | 15 |
| 2 | 33 | 2 | 17 |
| 3 | 15 | 3 | 19 |
| 4 | 34 | 4 | 21 |
| 5 | 17 | 5 | 23 |
| 6 | 36 | 6 | 25 |
| Ground | 16, 18, 19, 35, 37 | Current Output Return | 16, 18, 20, 22, 24 |

# Analog Output Calibration

Use the following procedure to calibrate the analog outputs if a meter reading in the "Analog Output Testing" procedure differed by more than one percent or after replacing the motherboard or optional I/O expansion board.

Equipment Required:

Multimeter

1. Connect a meter to the channel to be adjusted and set to voltage or current as appropriate. **Figure 7–12** shows the analog output pins and **Table 7–4** identifies the associated channels.

2. From the Main Menu, press [↓] to scroll to Service, press [↵] > [↓] to scroll to Analog Out Calibration, and press [↵].

   The Analog Output Cal screen displays.

**Note** If Service Mode is not displayed, refer to "Accessing the Service Mode" in this chapter, then return to the beginning of this step. ▲

3. At the Analog Output Cal screen, press [↓] to scroll to the voltage channel or current channel corresponding to the rear panel terminal pins where the meter is connected, then press [↵].

4. With the cursor at Calibrate Zero, press [↵].

   The Analog Output Cal line displays Zero.

**Note** When calibrating the analog output, always calibrate zero first and then calibrate full scale. ▲

5. Use [↑] [↓] until the meter reads the value shown in the Set Output To line, then press [↵] to save the value.

6. Press [■] to return to the previous screen.

7. Press [↓] [↵] to select Calibrate Full Scale.

8. Use [↑] [↓] until the meter reads the value shown in the Set Output To line, then press [↵] to save the value.

# Analog Input Calibration

Use the following procedures to calibrate the analog inputs after replacing the optional I/O expansion board. These procedures include selecting analog input channels, calibrating them to zero volts, and then calibrating them to full scale using a known voltage source.

Use the following procedure to calibrate the input channels to zero volts.

## Calibrating the Input Channels to Zero Volts

1. From the Main Menu, press [↓] to scroll to Service, press [↵] > [↓] to scroll to Analog Input Calibration, and press [↵].

   The Analog Input Cal screen displays.

**Note** If Service Mode is not displayed, refer to "Accessing the Service Mode" in this chapter, then return to the beginning of this step. ▲

2. At the Analog Input Cal screen, press [↓] to scroll to a channel, and press [↵].

3. With the cursor at Calibrate Zero, press [↵].

   The screen displays the input voltage for the selected channel.

4. Make sure that nothing is connected to the channel input pins and press [↵] to calibrate the input voltage on the selected channel to zero volts.

   The screen displays 0.00 V as the voltage setting.

5. Press [■] > [■] to return to the Analog Input Cal screen and repeat Steps 2 through 4 to calibrate other input channels to zero as necessary.

6. Continue with the "Calibrating the Input Channels to Full Scale" procedure that follows.

## Calibrating the Input Channels to Full Scale

Use the following procedure to calibrate the input channels to full scale by applying a known voltage to the channels.

Equipment Required:

DC voltage source (greater than 0 volts and less than 10 volts)

1. Connect the known DC voltage source to the input channel (1-8) to be calibrated. **Figure 7–12** shows the analog input pins and **Table 7–5** identifies the associated channels.

2. From the Main Menu, press [↓] to scroll to Service, press [↵] > [↓] to scroll to Analog Input Calibration**,** and press [↵].

   The Analog Input Cal screen displays input channels 1-8.

3. At the Analog Input Cal screen, press [↓] to scroll to the channel selected in Step 1, and press [↵].

4. Press [↓] to scroll to Calibrate Full Scale, and press [↵].

   The screen displays the current input voltage for the selected channel.

5. Use [←] [→] and [↑] [↓] to enter the source voltage, and press [↵] to calibrate the input voltage for the selected channel to the source voltage.

6. Press [▢] > [▢] to return to the input channels display and repeat Steps 3-5 to calibrate other input channels to the source voltage as necessary.

**Table 7–5.** Analog Input Channels and Rear Panel Pin Connections

| Input Channel | Pin |
|---|---|
| 1 | 1 |
| 2 | 2 |
| 3 | 3 |
| 4 | 5 |
| 5 | 6 |
| 6 | 7 |
| 7 | 9 |
| 8 | 10 |
| Ground | 4, 8, 11 |

## Analyzer Pressure Transducer Assembly Replacement

Use the following procedure to replace the analyzer pressure transducer assembly (**Figure 7–13**).

Equipment Required:

Pressure transducer assembly

Philips screwdriver

**Equipment Damage** Some internal components can be damaged by small amounts of static electricity. A properly ground antistatic wrist strap must be worn while handling any internal component. If an antistatic wrist strap is not available, be sure to touch the instrument chassis before touching any internal components. When the instrument is unplugged, the chassis is not at earth ground. ▲

1. Turn instrument OFF, unplug the power cord, and remove the cover.

2. Disconnect plumbing from the pressure transducer assembly. Note the plumbing connections to facilitate reconnection.

3. Disconnect the pressure transducer cable from the measurement interface board.

4. Loosen the two pressure transducer assembly retaining screws and remove the pressure transducer assembly by sliding it down then taking it out.

5. To install the pressure transducer assembly, follow the previous steps in reverse.

6. Calibrate the pressure transducer. Refer to the "Analyzer Pressure Transducer Calibration" procedure that follows.

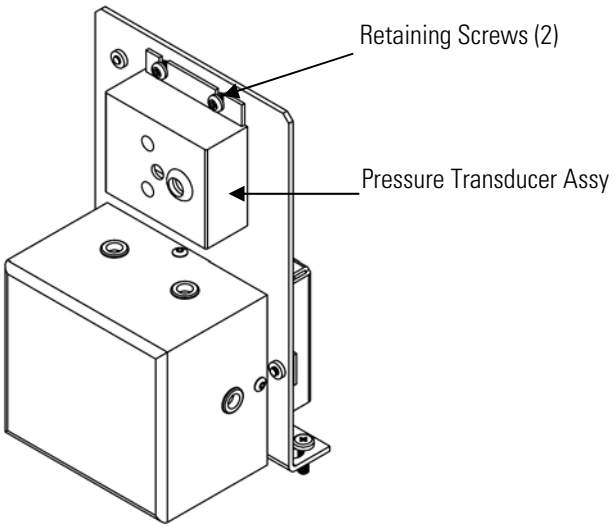


**Figure 7–13.** Replacing the Analyzer Pressure Transducer Assembly

## Analyzer Pressure Transducer Calibration

Use the following procedure to calibrate the analyzer pressure transducer.

**Notes** An error in the zero setting of the pressure transducer does not introduce a measurable error in the output concentration reading. Therefore, if only a barometer is available and not a vacuum pump, adjust only the span setting. ▲

A rough check of the pressure accuracy can be made by obtaining the current barometric pressure from the local weather station or airport and comparing it to the pressure reading. However, since these pressures are usually corrected to sea level, it may be necessary to correct the reading to local pressure by subtracting 0.027 mm Hg per foot of altitude. ▲

Do not try to calibrate the pressure transducer unless the pressure is known accurately. ▲

Equipment Required:

Vacuum pump

**Equipment Damage** Some internal components can be damaged by small amounts of static electricity. A properly ground antistatic wrist strap must be worn while handling any internal component. If an antistatic wrist strap is not available, be sure to touch the instrument chassis before touching any internal components. When the instrument is unplugged, the chassis is not at earth ground. ▲

1. Remove the cover.

2. Disconnect the tubing from the pressure transducer and connect a vacuum pump known to produce a vacuum less than 1 mm Hg.

3. From the Main Menu, press [↓] to scroll to **Service** > press [↵] > [↓] to scroll to **Chamber Pressure Calibration** > and press [↵].

   The Chamber Sensor Cal menu appears.

**Note** If Service Mode is not displayed, refer to "Accessing the Service Mode" in this chapter, then return to the beginning of this step. ▲

4. At the Chamber Sensor Cal screen, press [↵] to select **Zero**.

   The Calibrate Pressure Zero screen appears.

5. Wait at least 10 seconds for the zero reading to stabilize, then press [↵] to save the zero pressure value.

6. Disconnect the pump from the pressure transducer.

7. Press [■] to return to the Chamber Sensor Cal screen.

8. At the Chamber Sensor Cal screen, press [↓] [↵] to select **Span**.

   The Calibrate Pressure Span screen appears.

9. Wait at least 10 seconds for the ambient reading to stabilize, use [←] [→] and [↑] [↓] to enter the known barometric pressure, and press [↵] to save the pressure value.

10. Reconnect the instrument tubing to the pressure transducer.

11. Install the cover.

## Analyzer Flow Sensor Replacement

Use the following procedure to replace the flow sensor (**Figure 7–2**).

Equipment Required:

Flow sensor

Philips screwdriver

**Equipment Damage** Some internal components can be damaged by small amounts of static electricity. A properly ground antistatic wrist strap must be worn while handling any internal component. If an antistatic wrist strap is not available, be sure to touch the instrument chassis before touching any internal components. When the instrument is unplugged, the chassis is not at earth ground. ▲

1. Turn instrument OFF, unplug the power cord, and remove the cover.

2. Disconnect the plumbing connections from the flow sensor. Note the plumbing connections to facilitate reconnection.

3. Disconnect the flow sensor cable from the FLOW connector on the measurement interface board.

4. Remove the two screws securing the flow sensor to the kicker bracket and remove the flow transducer.

5. Install the new flow sensor following the previous steps in reverse.

6. Calibrate the flow sensor. Refer to the “Flow Transducer Calibration” procedure that follows.

# Analyzer Flow Sensor Calibration

Use the following procedure to calibrate the flow sensor.

Equipment Required:

Calibrated flow sensor

**WARNING** The service procedures in this manual are restricted to qualified representatives. ▲

If the equipment is operated in a manner not specified by the manufacturer, the protection provided by the equipment may be impaired. ▲

**Equipment Damage** Some internal components can be damaged by small amounts of static electricity. A properly ground antistatic wrist strap must be worn while handling any internal component. If an antistatic wrist strap is not available, be sure to touch the instrument chassis before touching any internal components. When the instrument is unplugged, the chassis is not at earth ground. ▲

1. Remove the cover.

2. Disconnect the pump cable from AC PUMP connector on the measurement interface board.

3. From the Main Menu, press [↓] to scroll to Service > press [↵] > [↓] to scroll to **Sample Flow Calibration** > and press [↵].

   The Sample Flow Sensor Cal screen appears.

**Note** If Service Mode is not displayed, refer to "Accessing the Service Mode" in this chapter, then return to the beginning of this step. ▲

4. At the Sample Flow Sensor Cal screen, press [↵] to select **Zero**.

   The Calibrate Sample Flow Zero screen appears.

5. Wait at least 10 seconds for the zero reading to stabilize, then press [↵] to save the zero flow value.

6. Reconnect the pump cable to the AC PUMP connector on the measurement interface board.

7. Connect a calibrated flow sensor at the SAMPLE bulkhead on the rear panel.

8. Press [■] to return to the Sample Flow Sensor Cal screen.

9. At the Sample Flow Sensor Cal screen, press [↓] [↵] to select **Span**.

   The Calibrate Sample Flow Span screen appears.

10. Wait at least 10 seconds for the reading to stabilize, use [←] [→] and [↑] [↓] to enter the flow sensor reading, and press [↵] to save the value.

11. Install the cover.

## Heater Assembly Replacement

Use the following procedure to replace the heater assembly (**Figure 7–14**).

Equipment Required:

Heater assembly

Heat sink grease

Philips screwdriver

Allen wrench, 5-32-inch

**Equipment Damage** Some internal components can be damaged by small amounts of static electricity. A properly ground antistatic wrist strap must be worn while handling any internal component. If an antistatic wrist strap is not available, be sure to touch the instrument chassis before touching any internal components. When the instrument is unplugged, the chassis is not at earth ground. ▲

1. Turn instrument OFF, unplug the power cord, and remove the cover.

2. Disconnect heater assembly cable from the AC BENCH connector on the measurement interface board.

3. Using the 5-32-inch wrench, remove the four screws securing the optical bench to the floor plate (**Figure 7–6**).

4. Lift the optical bench from the floor plate to gain access to the heater assembly.

5. Remove two retaining screws and washers from each heater and remove the heaters (**Figure 7–14**).

6. Apply heat sink grease to the new heaters as appropriate.

7. Fasten each heater with the two retaining screws and washers.

8. Secure the optical bench to the floor plate with the four screws.

9. Connect the heater assembly cable to the AC BENCH connector on the measurement interface board.

10. Replace the cover and plug in the power cord.

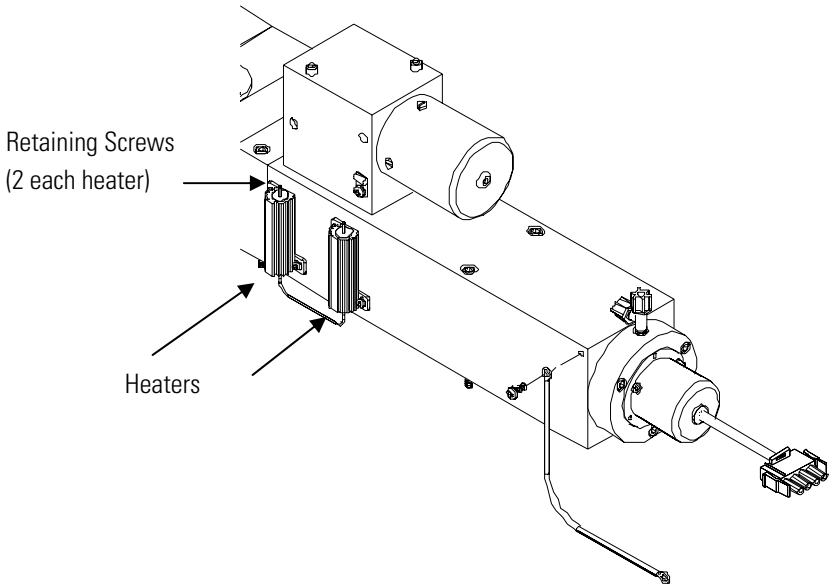


**Figure 7–14.** Replacing the Heater Assembly

# Internal Temperature Thermistor Replacement

Use the following procedure to replace the internal temperature thermistor (**Figure 7–15**).

Equipment Required:

Thermistor

**Equipment Damage** Some internal components can be damaged by small amounts of static electricity. A properly ground antistatic wrist strap must be worn while handling any internal component. If an antistatic wrist strap is not available, be sure to touch the instrument chassis before touching any internal components. When the instrument is unplugged, the chassis is not at earth ground. ▲

1. Turn instrument OFF, unplug the power cord, and remove the cover.

2. Squeeze the thermistor latch and pull the thermistor from the AMB TEMP connector on the measurement interface board.

3. Snap the new thermistor into the AMB TEMP connector.

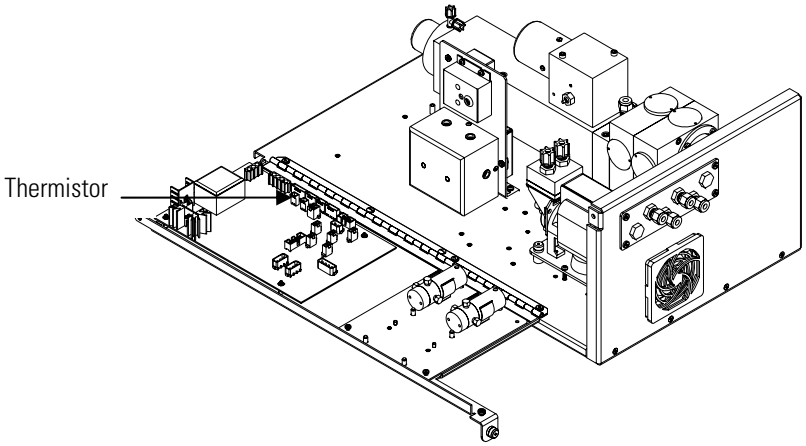


**Figure 7–15.** Replacing the Thermistor

## Analyzer Internal Temperature Calibration

Use the following procedure to calibrate the analyzer internal temperature for the instrument.

Equipment Required:

Calibrated thermometer or 10K ±1% resistor

**WARNING** The service procedures in this manual are restricted to qualified representatives. ▲

If the equipment is operated in a manner not specified by the manufacturer, the protection provided by the equipment may be impaired. ▲

**Equipment Damage** Some internal components can be damaged by small amounts of static electricity. A properly ground antistatic wrist strap must be worn while handling any internal component. If an antistatic wrist strap is not available, be sure to touch the instrument chassis before touching any internal components. When the instrument is unplugged, the chassis is not at earth ground. ▲

1. Remove the instrument cover.

2. Tape the thermistor (plugged into the measurement interface board) to a calibrated thermometer

**Note** Since the thermistors are interchangeable to an accuracy of ±0.2 °C, and have a value of 10K ohms at 25 °C, an alternate procedure is to connect an accurately known 10K resistor to the thermistor input (AMB TEMP) on the measurement interface board, and enter the temperature reading. ▲

A 1 °C change corresponds to a ±5% change in resistance, thus this alternative procedure can be quite accurate as a check; however, it clearly is not NIST traceable. ▲

3. From the Main Menu, press [↓] to scroll to Service > press [↵] > [↓] to scroll to **Analyzer Ambnt Temp Cal** > and press [↵].

   The Cal Analyzer Temp screen appears.

**Note** If Service Mode is not displayed, refer to "Accessing the Service Mode" in this chapter, then return to the beginning of this step. ▲

4. Wait at least 10 seconds for the ambient reading to stabilize, use [←] [→] and [↑] [↓] to enter the known temperature, and press [↵] to save the temperature value.

5. Install the cover.

## Input Board Replacement

Use the following procedure to replace the input board (**Figure 7–16**).

Equipment Required:

Input board

Philips screwdriver

1. Disconnect the BNC signal cable and the ribbon cable.

2. Loosen the two screws securing the bracket holding the input board to the floor plate, slide the bracket towards the optical bench slightly, and lift it off the base screws.

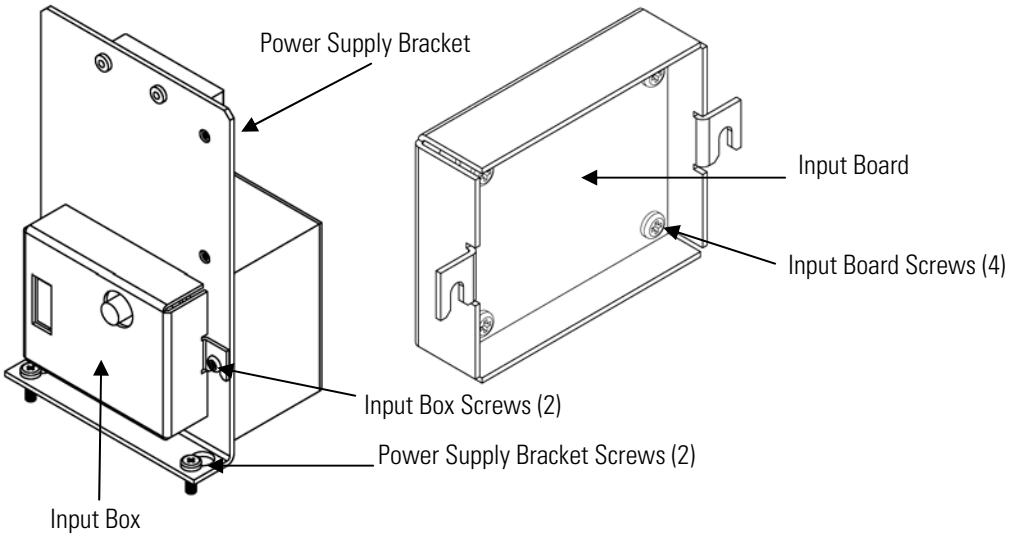


**Figure 7–16.** Replacing the Input Board

3. Loosen the two screws securing the input board assembly to the bracket, slide the assembly up, and remove from bracket.

4. Install the input board assembly by following the previous steps in reverse.

## I/O Expansion Board (Optional) Replacement

Use the following procedure to replace the optional I/O expansion board (**Figure 7–17**).

**Note** After replacing the optional I/O expansion board, calibrate the current outputs and the analog voltage inputs. See the "Analog Output Calibration" procedure and the "Analog Input Calibration" procedure in this chapter. ▲

Equipment Required:

I/O expansion board

Nut driver, 3/16-inch

**Equipment Damage** Some internal components can be damaged by small amounts of static electricity. A properly ground antistatic wrist strap must be worn while handling any internal component. If an antistatic wrist strap is not available, be sure to touch the instrument chassis before touching any internal components. When the instrument is unplugged, the chassis is not at earth ground. ▲

1. Turn instrument OFF, unplug the power cord, and remove the cover.
2. Unplug the I/O expansion board cable from the EXPANSION BD connector on the motherboard.
3. Remove the two standoffs holding the I/O expansion board connector to the rear panel (**Figure 7–18**).
4. Pop off the board from the mounting studs and remove the board.
5. To install the I/O expansion board, follow previous steps in reverse.
6. Calibrate the analog current outputs and analog voltage inputs per the procedure earlier in this chapter.

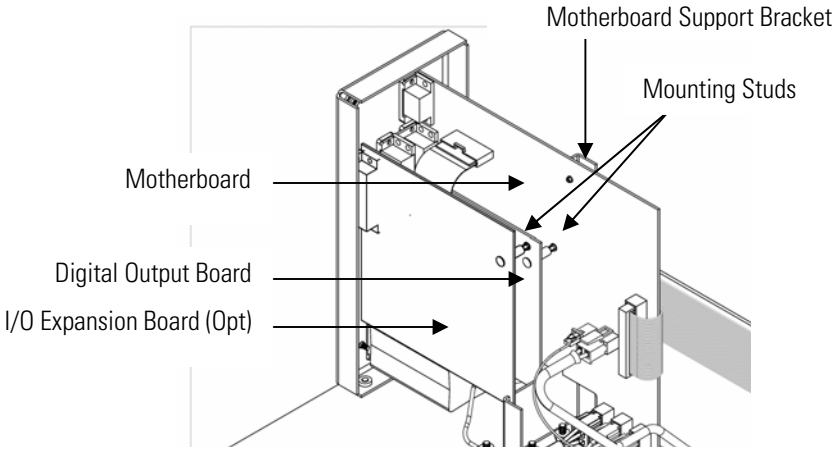


**Figure 7–17.** Replacing the I/O Expansion Board (Optional)

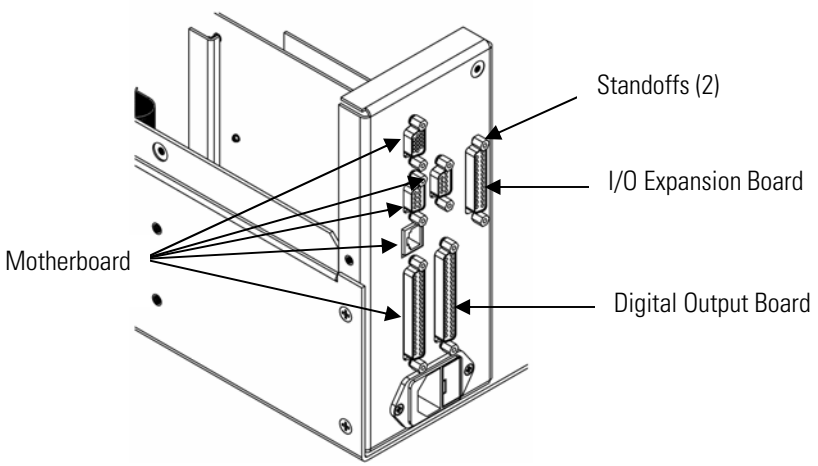


**Figure 7–18.** Rear Panel Board Connectors

## Digital Output Board Replacement

Use the following procedure to replace the digital output board (**Figure 7–18** and **Figure 7–19**).

Equipment Required:

Digital output board

Nut driver, 3/16-inch

**Equipment Damage** Some internal components can be damaged by small amounts of static electricity. A properly ground antistatic wrist strap must

be worn while handling any internal component. If an antistatic wrist strap is not available, be sure to touch the instrument chassis before touching any internal components. When the instrument is unplugged, the chassis is not at earth ground. ▲

1. Turn instrument OFF, unplug the power cord, and remove the cover.

2. Remove the I/O expansion board (optional), if used. See the "I/O Expansion Board Replacement" procedure in this chapter.

3. Disconnect the digital output board ribbon cable from the motherboard.

4. Using the nut driver, remove the two standoffs securing the board to the rear panel (**Figure 7–19**).

5. Pop off the digital output board from the mounting studs and remove the board.

6. To install the digital output board, follow previous steps in reverse.

## Motherboard Replacement

Use the following procedure to replace the motherboard (**Figure 7–18**).

Equipment Required:

Motherboard

Philips screwdriver

Nut driver, 3/16-inch

**Equipment Damage** Some internal components can be damaged by small amounts of static electricity. A properly ground antistatic wrist strap must be worn while handling any internal component. If an antistatic wrist strap is not available, be sure to touch the instrument chassis before touching any internal components. When the instrument is unplugged, the chassis is not at earth ground. ▲

1. Turn instrument OFF, unplug the power cord, and remove the cover.

2. Remove the I/O expansion board (optional), if used. See the "I/O Expansion Board Replacement" procedure in this chapter.

3. Remove the digital output board. See the “Digital Output Board Replacement” procedure in this chapter.

4. Unplug all connectors from the motherboard. Note connector locations to facilitate reconnection.

5. Using the nut driver, remove the standoffs securing the board to the rear panel (**Figure 7–19**).

6. Pop off the motherboard from motherboard support bracket, and remove the motherboard.

7. To install the motherboard, follow previous steps in reverse.

8. Calibrate the analog voltage outputs. Refer to “Analog Output Calibration” in this chapter.

## Measurement Interface Board Replacement

Use the following procedure to replace the measurement interface board (**Figure 7–19**).

Equipment Required:

Measurement interface board

Philips screwdriver

**Equipment Damage** Some internal components can be damaged by small amounts of static electricity. A properly ground antistatic wrist strap must be worn while handling any internal component. If an antistatic wrist strap is not available, be sure to touch the instrument chassis before touching any internal components. When the instrument is unplugged, the chassis is not at earth ground. ▲

1. Refer to “Removing the Measurement Bench and Lowering the Partition Panel” in this chapter to lower the partition panel, then proceed to the next step below.

2. Unplug all connectors. Note the locations of the connectors to facilitate reconnection.

3. Unscrew the two screws at the top of the measurement interface board. Pop off the measurement interface board from the two bottom mounting studs and remove the board.

4. To install the measurement interface board, follow previous steps in reverse.

5. Re-install the measurement bench. Refer to "Removing the Measurement Bench and Lowering the Partition Panel" in this chapter.

6. Recalibrate the following:

   **Analyzer pressure transducer** – refer to "Analyzer Pressure Transducer Calibration" on page 7-29.

   **Analyzer flow transducer** – refer to "Analyzer Flow Sensor Calibration" on page 7-32.

   **Analyzer internal temperature thermistor** – refer to "Analyzer Internal Temperature Calibration" on page 7-36.

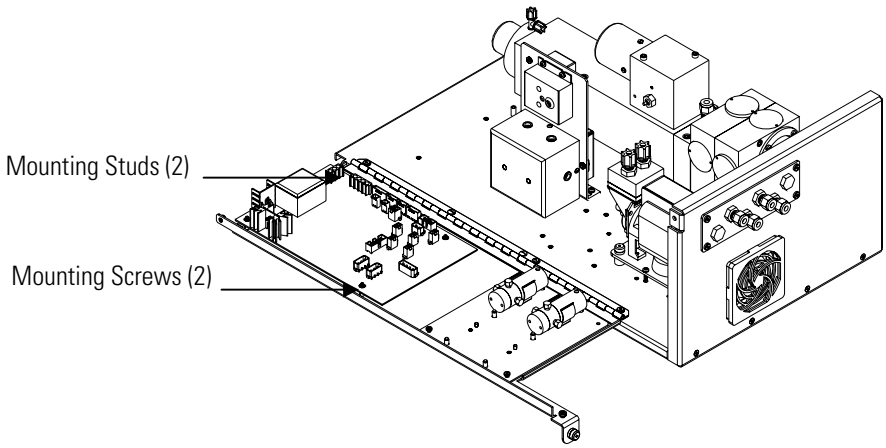


**Figure 7–19.** Replacing the Measurement Interface Board

# Front Panel Board Replacement

Use the following procedure to replace the front panel board (**Figure 7–20**).

Equipment Required:

Front panel board

**Equipment Damage** Some internal components can be damaged by small amounts of static electricity. A properly ground antistatic wrist strap must be worn while handling any internal component. If an antistatic wrist strap is not available, be sure to touch the instrument chassis before touching any internal components. When the instrument is unplugged, the chassis is not at earth ground. ▲

1. Turn instrument OFF, unplug the power cord, and remove the cover.
2. Remove the three ribbon cables and the two-wire connector from the front panel board.
3. Pop off the board from the two top mounting studs and remove the board by lifting it up and off the slotted bottom support.
4. Replace the front panel board by following previous steps in reverse.

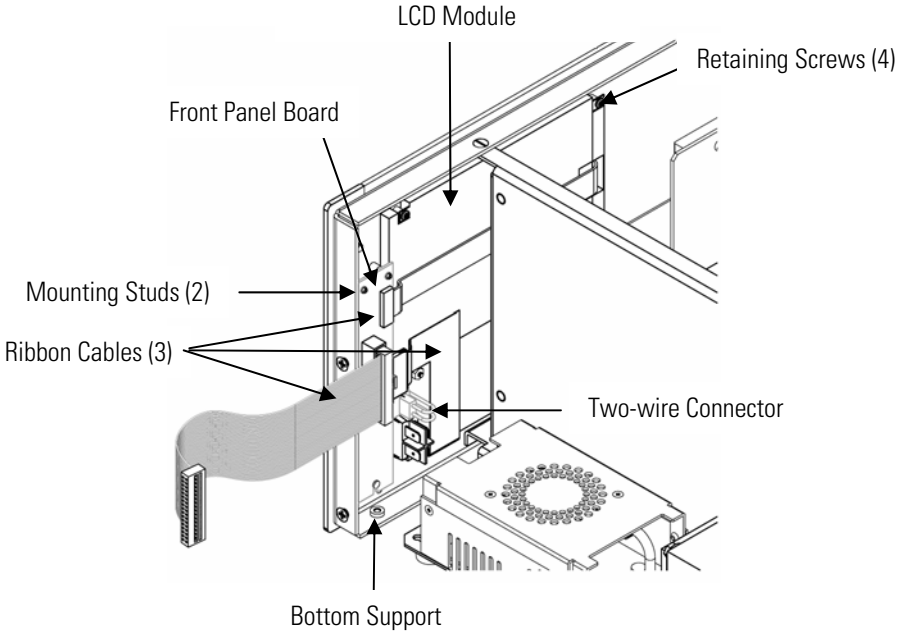


**Figure 7–20.** Replacing the Front Panel Board and the LCD Module

## LCD Module Replacement

Use the following procedure to replace the LCD module (**Figure 7–20**).

Equipment Required:

LCD module

Philips screwdriver

**CAUTION** If the LCD panel breaks, do not to let the liquid crystal contact your skin or clothes. If the liquid crystal contacts your skin or clothes, wash it off immediately using soap and water. ▲

**Equipment Damage** Some internal components can be damaged by small amounts of static electricity. A properly ground antistatic wrist strap must be worn while handling any internal component. If an antistatic wrist strap is not available, be sure to touch the instrument chassis before touching any internal components. When the instrument is unplugged, the chassis is not at earth ground. ▲

Do not remove the panel or frame from the module. ▲

The polarizing plate is very fragile, handle it carefully. ▲

Do not wipe the polarizing plate with a dry cloth, it may easily scratch the plate. ▲

Do not use alcohol, acetone, MEK or other Ketone based or aromatic solvents to clean the module, use a soft cloth moistened with a naphtha cleaning solvent. ▲

Do not place the module near organic solvents or corrosive gases. ▲

Do not shake or jolt the module. ▲

1. Turn instrument OFF, unplug the power cord, and remove the cover.
2. Disconnect the ribbon cable and the two-wire connector from the front panel board.
3. Remove the four screws at the corners of the LCD module.
4. Slide the LCD module out towards the center of the instrument.
5. Replace the LCD module by following previous steps in reverse.

**Note** The optimal contrast will change from one LCD screen to another. After replacing the LCD screen, the contrast may need to be reset. If the content on the screen is visible, select Instrument Controls > **Screen Contrast** and adjust the screen contrast. If the content on the screen is not visible, use the "set contrast" C-Link command to set screen contrast to mid range, then optimize the contrast. See the "C-Link Protocol Commands" appendix for more information on this command. ▲

## Converter Replacement Parts List

**Table 7–6** lists the converter replacement parts for the Model 5020*i* major subassemblies. Refer to **Figure 7–2** to identify the component location.

**Table 7–6.** Model 5020*i* Converter Replacement Parts

| Part Number | Description |
|---|---|
| 102985-00 | Temperature Control Board, 110V |
| 102985-01 | Temperature Control Board, 220V |
| 102966-00 | Converter Interface Board |
| 103227-01 | Pump Assembly, 110VAC |
| 8606 | Pump Repair Kit for 103227-01 and 103227-02* |
| 103227-02 | Pump Assembly, 220VAC |

| Part Number | Description |
|---|---|
| 101023-00 | Pressure Transducer Assembly |
| 102055-00 | Flow Transducer |
| 103226-00 | Solenoid Assembly, includes solenoid (101390-00) and bracket |
| 101390-00 | Solenoid Assembly |
| 100553-00 | Denuder, uncoated |
| 101055-00 | AC Receptacle Assembly |
| 100907-00 | Fan (In-Flow or Out Flow), 24VDC |
| 8630 | Fan Filter Guard Assembly (w/foam)* |
| 100365-00 | HEPA Filter, Kynar, internal and external (two required) |
| 100370-00 | Filter, Membrane, Zefluor, 47 mm* |
| 100730-00 | Thermal Fuse |
| 103875-00 | Electrical power fuse, 8A, 250V, T-Lag for 110VAC units* |
| 103874-00 | Electrical power fuse, 4A, 250V, Slo-Blo for 220VAC units* |
| 100429-00 | Thermocouple probe (two per converter) |
| 100918-00 | Thermocouple, Type-K, 25 ft. (external temperature sensor) |
| 100367-00 | Quartz Heater Core Tube Assembly |
| 104208-00 | Converter Output Line Assembly (1/4-inch Teflon tubing with a 1/2-1/4-inch Teflon reducing union fitting) |
| 100127-00 | Converter Heater Assembly (includes Converter Box and Heater) |
| 4127 | Capillary, 0.015-inch (purple) |
| 4800 | Capillary O-ring |

*Expendable item not covered by warranty period.

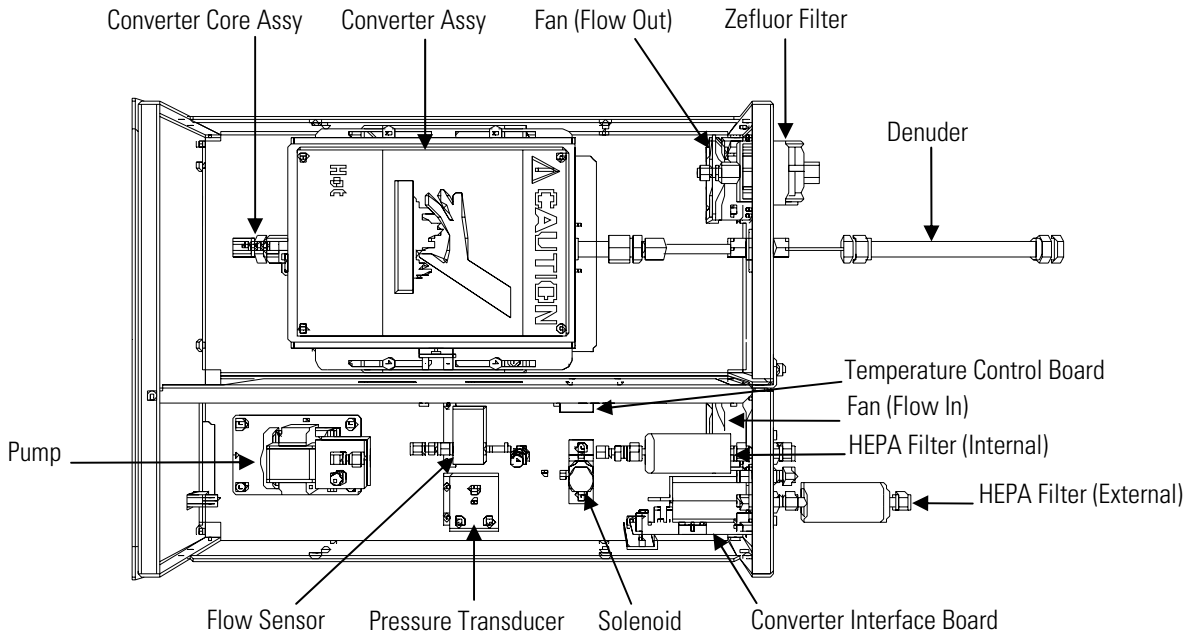


**Figure 7–21.** Model 5020*i* Converter Component Layout

## Removing the Converter and Lowering the Partition Panel

The converter plumbing and electronics can be removed and the partition panel can be lowered to improve access to connectors and components. Refer to the following steps when a procedure requires lowering the partition panel (**Figure 7–3**).

Equipment Required:

Philips screwdriver

**Equipment Damage** Some internal components can be damaged by small amounts of static electricity. A properly ground antistatic wrist strap must be worn while handling any internal component. If an antistatic wrist strap is not available, be sure to touch the instrument chassis before touching any internal components. When the instrument is unplugged, the chassis is not at earth ground. ▲

1. Turn instrument OFF and unplug the power cord.

2. If the instrument is mounted in a rack, remove it from the rack.

3. Remove the cover.

4. Disconnect the plumbing connections at the rear of the measurement bench.

5. Disconnect the three connectors that pass through the center of the partition panel and connect to the measurement interface board.

6. Remove two screws from the left side of the case (viewed from front).

7. Remove one screw from the bottom rear of the case.

8. Remove one screw from the top front of the partition panel.

9. While holding the case securely, loosen the captive screw at the rear of the measurement bench, and pull the measurement bench from the rear of the case.

10. Remove the screw at the top rear of the partition panel securing the top of partition panel to the measurement bench, and lower the panel being careful not to put excessive tension on the cables.

11. Replace the measurement bench by following previous steps in reverse.

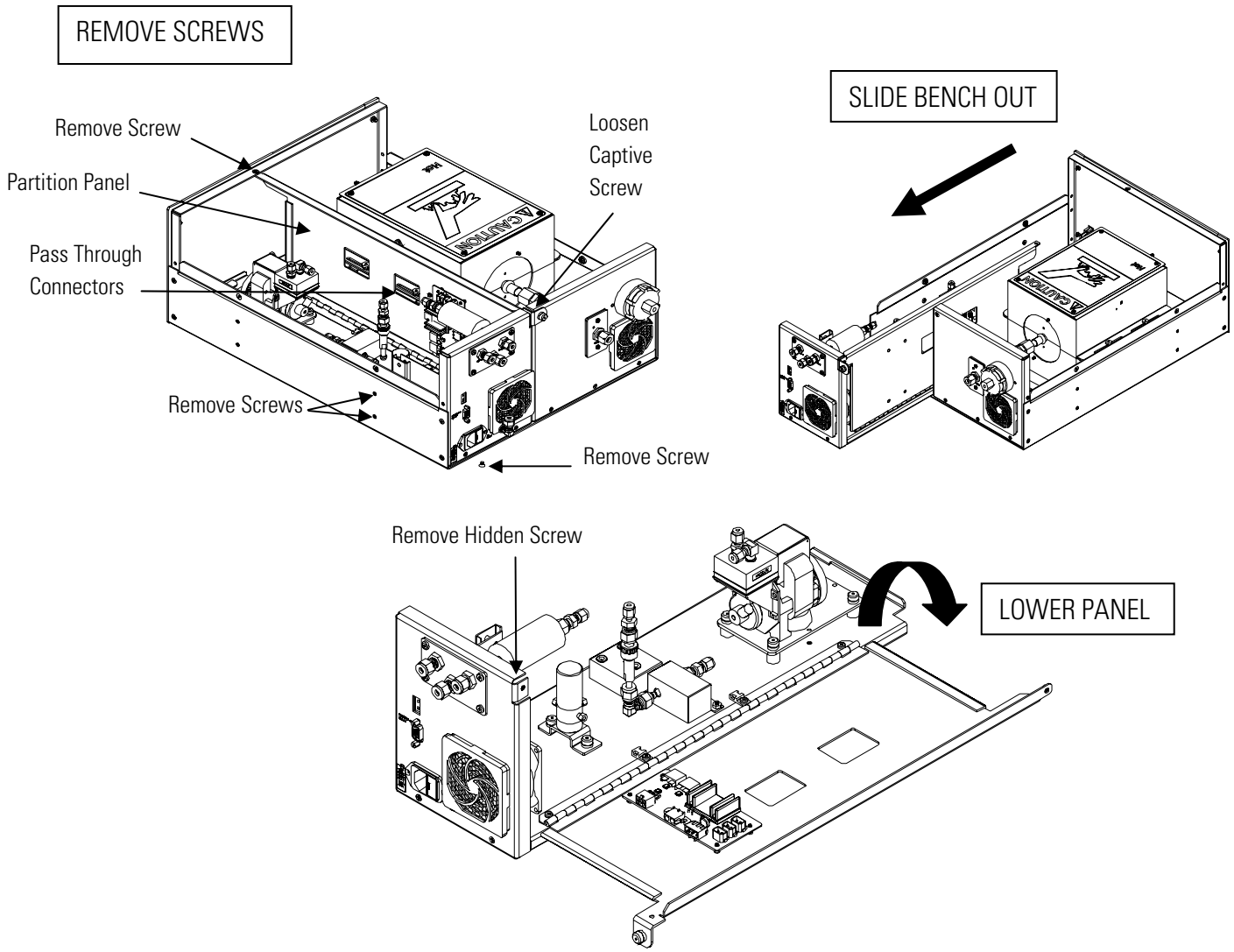


**Figure 7–22.** Removing the Converter Plumbing and Electronics Assembly and Lowering the Partition Panel

## Converter Electrical Fuse Replacement

Use the following procedure to replace the converter electrical fuse.

Equipment Required:

Replacement fuses (refer to the "Analyzer Replacement Parts List" in this chapter).

1. Turn instrument OFF and unplug the power cord.

2. Remove fuse drawer, located on the AC power connector.

3. If either fuse is blown, replace both fuses.

4. Insert fuse drawer and reconnect power cord.

## Converter Thermal Fuse Replacement

Use the following procedure to replace the converter thermal fuse.

Equipment Required:

Thermal fuse

Screwdriver

**Equipment Damage** Some internal components can be damaged by small amounts of static electricity. A properly ground antistatic wrist strap must be worn while handling any internal component. If an antistatic wrist strap is not available, be sure to touch the instrument chassis before touching any internal components. When the instrument is unplugged, the chassis is not at earth ground. ▲

1. Turn the instrument OFF, unplug the power cord, and remove the instrument cover.

2. Unplug the connectors from both sides of the thermal fuse.

3. Using the screwdriver, remove the old thermal fuse from the side of the converter oven.

4. Reverse the procedure to install the new thermal fuse.

## Converter Pump Replacement

Refer to the “Analyzer Pump Replacement” procedure in this chapter.

## Converter Flow Sensor Replacement

Use the following procedure to replace the converter flow sensor.

Equipment Required:

Flow sensor

Nutdriver, 5-16-inch

**Equipment Damage** Some internal components can be damaged by small amounts of static electricity. A properly ground antistatic wrist strap must be worn while handling any internal component. If an antistatic wrist strap is not available, be sure to touch the instrument chassis before touching any internal components. When the instrument is unplugged, the chassis is not at earth ground. ▲

1. Turn the instrument OFF, unplug the power cord, and remove the instrument cover.
2. Disconnect the pneumatic connections from the converter flow sensor.
3. Disconnect the flow sensor cable from the Flow connector on the converter interface board.
4. Loosen the two nuts securing the flow sensor to the floor plate and remove the flow sensor.
5. Install the new flow sensor following the previous steps in reverse.
6. Calibrate the converter flow sensor. Refer to the "Converter Flow Sensor Calibration" procedure that follows.

## Converter Flow Sensor Calibration

Use the following procedure to calibrate the converter flow sensor.

Equipment Required:

Calibrated flow sensor

**WARNING** The service procedures in this manual are restricted to qualified representatives. ▲

If the equipment is operated in a manner not specified by the manufacturer, the protection provided by the equipment may be impaired. ▲

**Equipment Damage** Some internal components can be damaged by small amounts of static electricity. A properly ground antistatic wrist strap must be worn while handling any internal component. If an antistatic wrist strap is not available, be sure to touch the instrument chassis before touching any internal components. When the instrument is unplugged, the chassis is not at earth ground. ▲

1. Remove the cover.

2. Disconnect the pump cable from AC PUMP connector on the temperature control board.

3. From the Main Menu, press [↓] to scroll to Service > press [↵] > [↓] to scroll to **Cnv Filter Flow Calibration** > and press [↵].

   The Conv Flow Sensor Cal screen appears.

**Note** If Service Mode is not displayed, refer to "Accessing the Service Mode" in this chapter, then return to the beginning of this step. ▲

4. At the Conv Flow Sensor Cal screen, press [↵] to select **Zero**.

   The Calibrate Cnv Flow Zero screen appears.

5. Wait at least 10 seconds for the zero reading to stabilize, then press [↵] to save the zero flow value.

6. Reconnect the pump cable to the AC PUMP connector on the temperature control board.

7. Connect a calibrated flow sensor at the FILTER OUT bulkhead on the rear panel.

8. Verify that there is air flowing at a rate of at least 600 cc/min. If there is not air flow, the instrument may be in Sample mode. To switch from Sample mode to Filter mode:

a. Press [■] to go to the Main Menu, scroll to Instrument Controls > **Sample/Filter Mode** and press [↵].

b. At the Sample/Filter Mode screen, press [↑] or [↓] to change to Manual, press [↵] [→] to save the setting.

c. Press [▸] to return to the Run screen and press [▸] again to display "Filter" on the status bar.

9. Press [■] to return to the Conv Flow Sensor Cal screen.

10. At the Conv Flow Sensor Cal screen, press [↓] [↵] to select **Span**.

11. The Calibrate Cnv Flow Span screen appears.

12. Wait at least 10 seconds for the reading to stabilize, use [←] [→] and [↑] [↓] to enter the flow sensor reading, and press [↵] to save the value.

13. Install the cover.

## Converter Pressure Transducer Replacement

Use the following procedure to replace the converter pressure transducer.

Equipment Required:

Converter pressure transducer

Nutdriver, 5-16-inch

**Equipment Damage** Some internal components can be damaged by small amounts of static electricity. A properly ground antistatic wrist strap must be worn while handling any internal component. If an antistatic wrist strap is not available, be sure to touch the instrument chassis before touching any internal components. When the instrument is unplugged, the chassis is not at earth ground. ▲

1. Turn the instrument OFF, unplug the power cord, and remove the instrument cover.

2. Disconnect the tubing from the converter pressure transducer.

3. Loosen the two nuts securing the converter pressure transducer to the floor plate and remove the pressure transducer.

4. Install the new converter pressure transducer following the previous steps in reverse.

5. Calibrate the converter pressure transducer. Refer to the "Converter Pressure Transducer Calibration" procedure that follows.

## Converter Pressure Transducer Calibration

Use the following procedure to calibrate the converter pressure transducer.

**Notes** An error in the zero setting of the pressure transducer does not introduce a measurable error in the output concentration reading. Therefore, if only a barometer is available and not a vacuum pump, adjust only the span setting. ▲

A rough check of the pressure accuracy can be made by obtaining the current barometric pressure from the local weather station or airport and comparing it to the pressure reading. However, since these pressures are usually corrected to sea level, it may be necessary to correct the reading to local pressure by subtracting 0.027 mm Hg per foot of altitude. ▲

Do not try to calibrate the pressure transducer unless the pressure is known accurately. ▲

Equipment Required:

Vacuum pump

**Equipment Damage** Some internal components can be damaged by small amounts of static electricity. A properly ground antistatic wrist strap must be worn while handling any internal component. If an antistatic wrist strap is not available, be sure to touch the instrument chassis before touching any internal components. When the instrument is unplugged, the chassis is not at earth ground. ▲

1. Turn the instrument OFF, unplug the power cord, and remove the instrument cover.

2. Disconnect the tubing from the converter pressure transducer and connect a vacuum pump known to produce a vacuum less than 1 mm Hg.

3. From the Main Menu, press [↓] to scroll to **Service** > press [↵] > [↓] to scroll to **Cnv Amb Pressure Cal** > and press [↵].

   The Cnv Ambient Sensor Cal menu appears.

**Note** If Service Mode is not displayed, refer to "Accessing the Service Mode" in this chapter, then return to the beginning of this step. ▲

4. At the Cnv Ambient Sensor Cal screen, press [↵] to select **Zero**.

   The Calibrate Cnv Press Zero screen appears.

5. Wait at least 10 seconds for the zero reading to stabilize, then press [↵] to save the zero pressure value.

6. Disconnect the pump from the pressure transducer.

7. Press [■] to return to the Cnv Ambient Sensor Cal screen.

8. At the Cnv Ambient Sensor Sensor Cal screen, press [↓] [↵] to select **Span**.

   The Calibrate Cnv Press Span screen appears.

9. Wait at least 10 seconds for the ambient reading to stabilize, use [←] [→] and [↑] [↓] to enter the known barometric pressure, and press [↵] to save the pressure value.

10. Reconnect the instrument tubing to the pressure transducer.

11. Install the cover.

## Converter Soleniod Replacement

Use the following procedure to replace the converter solenoid.

Equipment Required:

Converter solenoid

#1 Philips screwdriver

**Equipment Damage** Some internal components can be damaged by small amounts of static electricity. A properly ground antistatic wrist strap must be worn while handling any internal component. If an antistatic wrist strap is not available, be sure to touch the instrument chassis before touching any internal components. When the instrument is unplugged, the chassis is not at earth ground. ▲

1. Turn the instrument OFF, unplug the power cord, and remove the instrument cover.

2. Disconnect the tubing from the solenoid and disconnect the solenoid cable from the converter interface board. Note connections to facilitate reconnection.

3. Loosen the two captive retaining screws and remove the solenoid.

4. Invert the solenoid and remove the two screws securing the solenoid to the mounting bracket.

5. Install the new solenoid following the previous steps in reverse.

## Converter Heater Thermocouple Replacement

Use the following procedure to replace the converter heater thermocouple.

Equipment Required:

Thermocouple (inside converter heater assembly)

Wire cutters

Screwdriver

**Equipment Damage** Some internal components can be damaged by small amounts of static electricity. A properly ground antistatic wrist strap must be worn while handling any internal component. If an antistatic wrist strap

is not available, be sure to touch the instrument chassis before touching any internal components. When the instrument is unplugged, the chassis is not at earth ground. ▲

1. Turn the instrument OFF, unplug the power cord, and remove the instrument cover.

2. Follow the "Quartz Converter Core Replacement" procedure in the "Preventive Maintenance" chapter to remove the quartz converter core.

3. Unplug both of the thermocouple connectors from the temperature control board and cut the tie wraps.

4. Replace the damaged thermocouple with a new one.

5. Reverse this procedure to reassemble the converter assembly. Be careful to note the orientation of the quartz converter core.

6. Reconnect the thermocouples: the top thermocouple lead connects to the CONV TOP connector on the temperature control board; the bottom thermocouple lead connects to the CONV BTM connector.

## Converter Ambient Thermocouple Replacement

Use the following procedure to replace the converter ambient thermocouple.

Equipment Required:

Thermocouple (ambient – outside instrument)

1. Turn OFF the power to the converter module.

2. The ambient thermocouple plugs into the EXTERNAL TEMP connector on the converter rear panel (**Figure 2–6**). Unplug the damaged thermocouple and plug in the new one.

3. Turn the converter module power back ON.

## Converter Fan Replacement

Use the following procedure to replace a converter fan (flow-out or flow-in) Refer to **Figure 2–6** and **Figure 7–21**.

Equipment Required:

Fan

Philips screwdriver

**Equipment Damage** Some internal components can be damaged by small amounts of static electricity. A properly ground antistatic wrist strap must be worn while handling any internal component. If an antistatic wrist strap is not available, be sure to touch the instrument chassis before touching any internal components. When the instrument is unplugged, the chassis is not at earth ground. ▲

1. Turn instrument OFF, unplug the power cord, and remove the cover.
2. Remove the fan guard from the fan and remove the filter.
3. Pull the power connector off the fan.
4. Remove the four fan mounting screws and remove the fan.
5. Install a new fan following the previous steps in reverse.

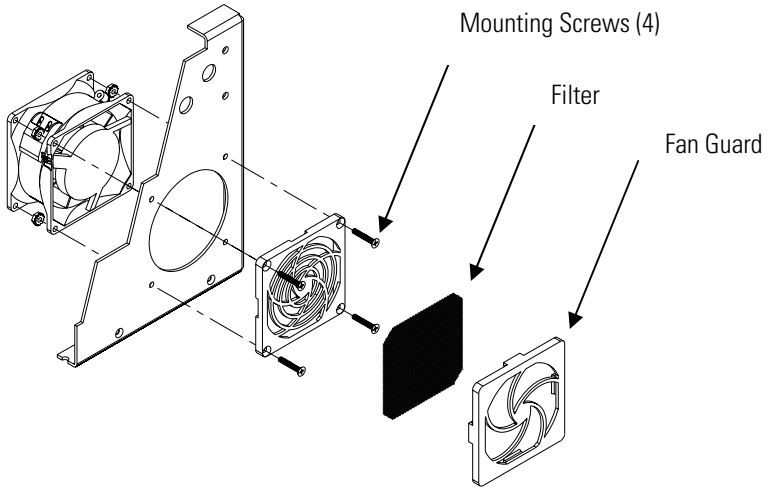


**Figure 7–23.** Replacing a Converter Fan

## Temperature Control Board Replacement

Use the following procedure to replace the temperature control board.

Equipment Required:

Temperature control board

**Equipment Damage** Some internal components can be damaged by small amounts of static electricity. A properly ground antistatic wrist strap must be worn while handling any internal component. If an antistatic wrist strap is not available, be sure to touch the instrument chassis before touching any internal components. When the instrument is unplugged, the chassis is not at earth ground. ▲

1. Turn instrument OFF, unplug the power cord, and remove the cover.
2. Remove all cables from the temperature control board. Note connections to facilitate reconnection.
3. Pull board from the four pop off mounts.
4. Press the new board onto the mounts until it snaps into place.
5. Reconnect the cables.

## Converter Interface Board

Use the following procedure to replace the converter interface board.

Equipment Required:

Converter interface board

**Equipment Damage** Some internal components can be damaged by small amounts of static electricity. A properly ground antistatic wrist strap must be worn while handling any internal component. If an antistatic wrist strap is not available, be sure to touch the instrument chassis before touching any internal components. When the instrument is unplugged, the chassis is not at earth ground. ▲

1. Turn instrument OFF, unplug the power cord, and remove the cover.
2. Remove all cables from the converter interface board. Note connections to facilitate reconnection.
3. Remove the two standoffs from the RS-485 connector on the converter rear panel.
4. Pull board from the two pop off mounts.
5. Press the new board onto the two mounts until it snaps into place and secure the RS-485 connector on the converter rear panel with the two standoffs.
6. Reconnect the cables.
7. Calibrate the converter ambient pressure and the converter filter flow. Refer to "Converter Ambient Pressure Calibration" on page 3-82 and "Converter Filter Flow Calibration" on page 3-85.

## Service Locations

For additional assistance, service is available from exclusive distributors worldwide. Contact one of the phone numbers below for product support and technical information or visit us on the web at www.thermo.com/aqi.

1-866-282-0430 Toll Free

1-508-520-0430 International

# Chapter 8
# System Description

This chapter describes the function and location of the system components, provides an overview of the software structure, and includes a description of the system electronics and input/output connections and functions as follows.

## Analyzer Hardware

Model 5020*i* analyzer hardware components (**Figure 8–1**) include:

- Optics
  - Flash lamp
  - Condensing lens
  - Mirror assembly
  - Relay Lens
  - Light baffle
- Flash lamp trigger assembly
- Reaction chamber
  - Bandpass filter
- Photomultiplier tube
- Photodetector
- Analyzer flow sensor
- Analyzer pressure transducer
- Capillary
- Analyzer vacuum Pump

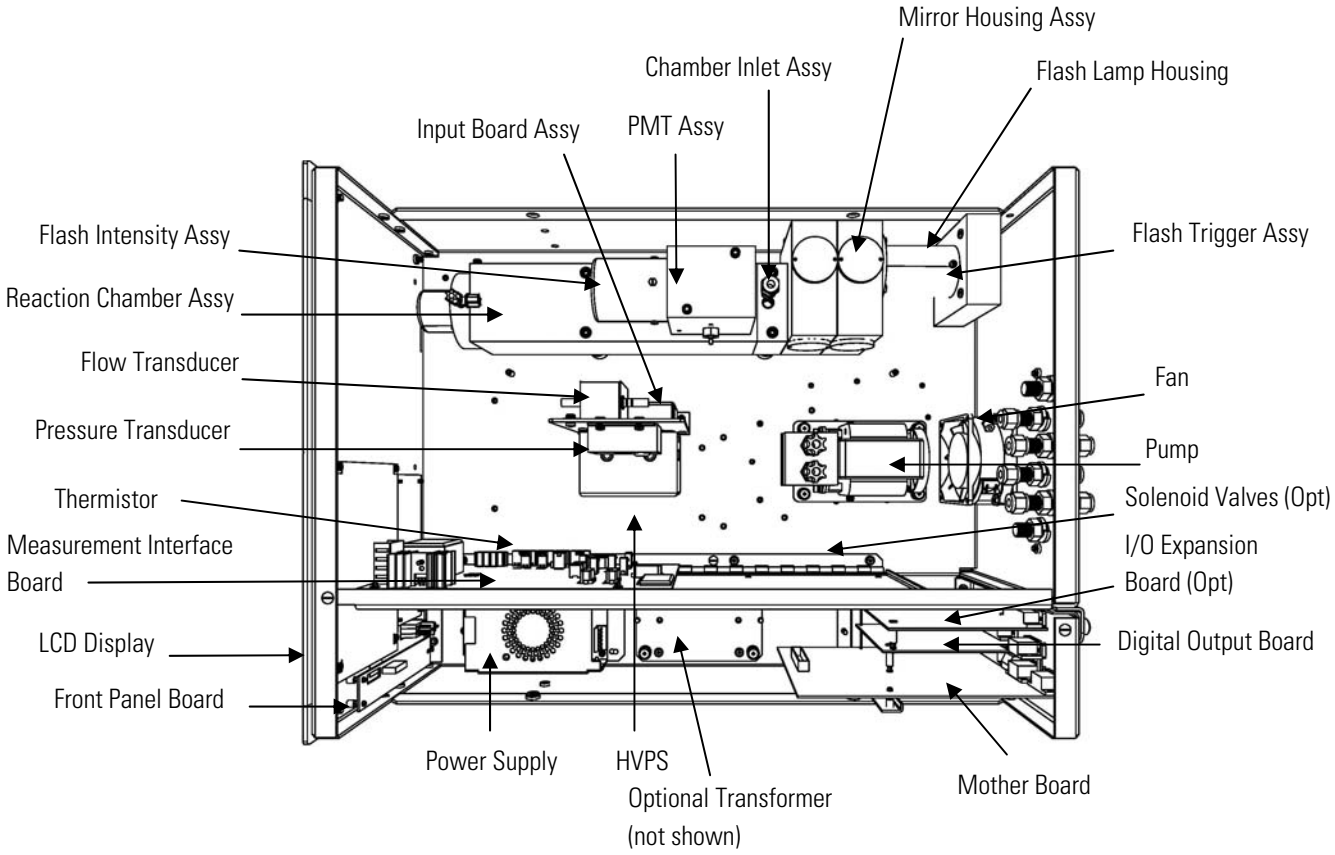


**Figure 8–1.** Analyzer Hardware Components

## Optics

The optics section provides the light source for the fluorescence reaction and optimizes the reaction with a system of lenses and mirrors.

The optics section begins with a hermetically sealed lamp that is pulsed at a rate of 10 times per second. The lamp is operated in the pulsed mode for six major reasons.

- Long life
- High optical intensity - improved signal to noise ratio
- Small size
- Low power requirements - less than 1 watt
- Long term stability
- Chopped signal processing - no dark current drift

The light from this lamp is focused with a condensing lens into the mirror assembly. A set of eight mirrors selectively reflects only those wavelengths that are of use in exciting $SO_2$ molecules. This reflective filtering allows the radiation reaching the detection cell to be both more intense and more stable throughout the lifetime of the instrument. After this reflective filtering, the light passes through a relay lens and into the fluorescence cell. A circular baffle helps keep stray light from entering the actual detection volume.

The main detector assembly is located at a right angle to the incoming light. A condenser lens collects and focuses light from fluorescing $SO_2$ molecules. The light then passes through a bandpass filter that restricts the light reaching the photomultiplier tube to the $SO_2$ fluorescence wavelengths only.

Facing the light source, at the opposite side of the fluorescence cell, is a light trap, which prevents light from reflecting back into the detection volume. At the center of this trap, a hole allows light to reach the photodetector located at the back of the fluorescence cell. This photodetector continuously monitors the incident light. It is connected to a circuit that automatically compensates for fluctuations in the flash lamp output.

**Flash Lamp**

The flash lamp provides the ultraviolet light source that causes the fluorescence reaction in the $SO_2$ molecules.

**Condensing Lens**

The condensing lens focuses light from the flash lamp into the mirror assembly.

**Mirror Assembly**

A set of eight mirrors selectively reflects only those wavelengths used in exciting $SO_2$ molecules. This reflective filtering causes the radiation reaching the detection chamber to be more intense and more stable throughout the lifetime of the instrument.

**Relay Lens**

The relay lens is used to optically couple the primary and secondary monochromaters.

**Light Baffle**

The circular baffle helps keep stray light from entering the detection volume.

## Flash Lamp Trigger Assembly

The flash lamp trigger assembly pulses the UV flash lamp at a rate of 10 times per second for improved signal-to-noise ratio and long term stability.

## Reaction Chamber

In the reaction chamber pulsating light from the flash lamp excites the $SO_2$ molecules. A condenser lens collects and focuses light from fluorescing $SO_2$ molecules onto the mirror assembly.

### Bandpass Filter

The bandpass filter restricts the light reaching the photomultiplier tube to the $SO_2$ fluorescence wavelengths.

## Photomultiplier Tube

The PMT converts optical energy from the reaction to an electrical signal. This signal is sent to the input board which transmits it to the processor.

## Photodetector

The photodetector is located in the fluorescence chamber and continuously monitors the pulsating UV flash lamp. This photodetector is connected to a circuit that automatically compensates for fluctuations in flash lamp output.

## Analyzer Flow Sensor

The analyzer flow sensor is used for measuring the flow of sample gas in the analyzer.

## Analyzer Pressure Transducer

The analyzer pressure transducer or pressure sensor measures the reaction chamber pressure.

## Capillary

The capillary along with the pump is used to control flow in the sample line.

## Analyzer Vacuum Pump

The analyzer vacuum pump draws flow from the sampling system through the converter core to analyzer bench. It also expels the reacted gases out of the analyzer.

## Converter Hardware

The converter consists of two identical semi-circular heater modules that are molded into rectangular sheet metal housings. The two heater modules mount "face to face" and a quartz converter core, that carries the sample, runs down the center. The quartz core contains a reactive metal rod that serves as the reaction surface for conversion of sulfate to sulfur dioxide.

The heater modules are a custom-built ceramic fiber design that uses a long-life iron-chrome-aluminum resistance element embedded in alumina-silica insulation. The heaters are rated for a maximum operating temperature of 1200 degrees centigrade and can be wired in series or in parallel to accommodate 110 or 220-volt power supplies.

Best converter efficiency and longer life is obtained if the converter is run at 950 to 1000 degrees centigrade. Converter temperature is monitored using special high-temperature thermocouple probes that are inserted into holes in the ends of the heater module. One thermocouple monitors the temperature in the annular space around the quartz core and the second monitors the temperature in the insulation, just behind the heater element (BTE).

Although signals from both thermocouples are input to the microcomputer, only the probe that is located in the annular space is involved in the temperature control loop. The signal from that thermocouple is used as the input control to a simplified pulse width modulation temperature control scheme. In this control scheme the heater duty cycle is adjusted up or down depending on the ratio of current temperature to set point. The second thermocouple is used only as an alarm trigger that will shut down operation if an excessive temperature gradient is detected between the annular space and the BTE element.

In addition to the two thermocouple probes, the heater assembly also includes a thermal fuse that will shut off power to the heaters if a temperature over-run is detected. The thermal fuse is mounted on an external wall of the top section of the heater.

As noted above, the converter core is made from a quartz tube with larger diameter quartz positioning rings fused to the outside and a reactive metal rod in the center. The rod is held in place at the center of the core by quartz inserts and high-temperature springs. The springs are intended to prevent breakage during shipping and are expected to corrode during operation. Note that in some units, one end of the core assembly includes a small plug of quartz wool. If the quartz wool is present, the core must be installed with the quartz wool at the downstream end of the converter, or it will prevent sulfate aerosol from reaching the reactive zone.

Model 5020*i* converter hardware components (**Figure 8–1**) include:

- Temperature control board
- Converter interface board

- Converter heaters
- Converter core
- Sample/filter switching valve
- Internal HEPA filter
- Converter vacuum pump
- Converter pressure transducer
- Converter flow sensor
- Outlet filter
- Denuder
- Converter external temperature sensor

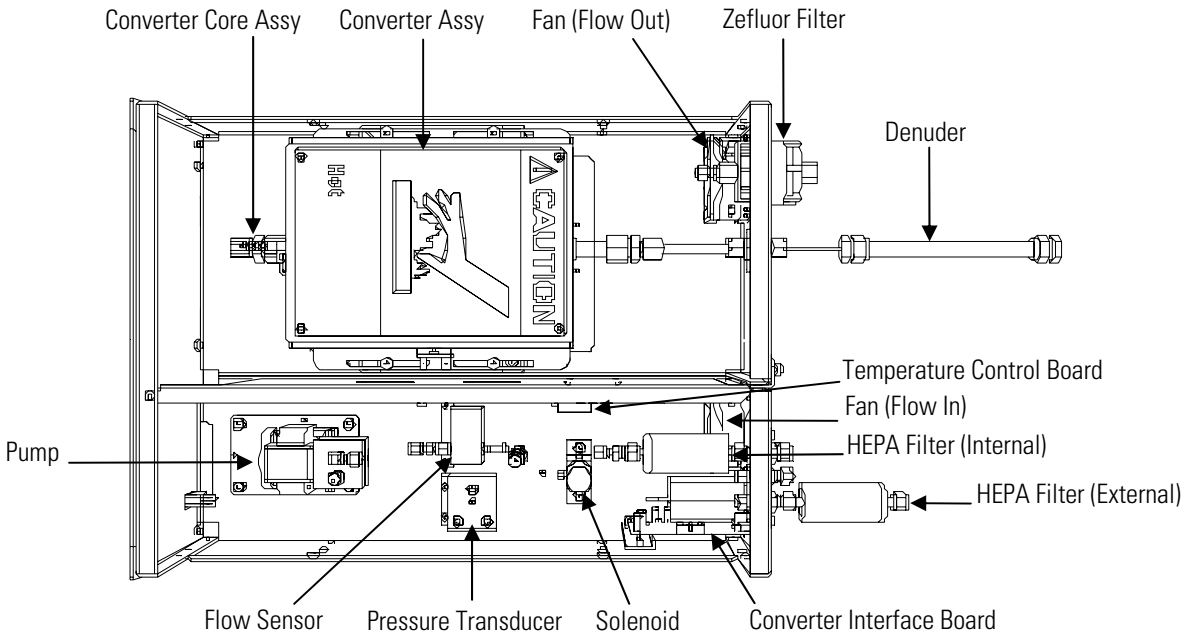


**Figure 8–2.** Converter Hardware Components

### Temperature Control Board

The temperature control board sets and regulates the converter temperature. The converter temperature is measured by a conditioned thermocouple signal and fed back to the main processor to be used to display and control the converter temperature. The temperature control board receives control signals from the main processor software to control the converter heater to the desired set point. Protective circuitry prevents overheating in the event of broken wires to the thermocouple or processor faults.

### Converter Interface Board

The converter interface board controls and monitors the converter temperature.

### Converter Heaters

The converter heaters provide the heat to the converter core. The two converter heaters mount face-to-face in the converter.

### Converter Core

The converter core is a quartz tube that contains a reactive metal rod that serves as the reaction surface for conversion of sulfate to sulfur dioxide.

### Sample/Filter Switching Valve

The sample/filter switching valve directs the converter pump output to vent or sample.

### Internal HEPA Filter

The internal HEPA filter removes sulphate particulates from the filter air stream.

### Converter Vacuum Pump

The converter vacuum pump provides a filtered air stream for the system.

### Converter Pressure Transducer

The converter pressure transducer measures the current ambient atmospheric pressure.

### Converter Flow Sensor

The converter flow sensor is used for measuring the flow of filtered air in the converter.

### Outlet Filter

The outlet filter removes particles coming from the converter core that could contaminate the analyzer optics.

### Denuder

The denuder removes $SO_2$ and other acid gases from the air stream to lower the background signal and improve the detection limit.

### Converter External Temperature Sensor

The converter external temperature sensor is used to sense the ambient temperature outside the converter.

## Software

The processor software tasks are organized into four areas:

- Instrument Control
- Monitoring Signals
- Measurement Calculations
- Output Communication

### Instrument Control

Low-level embedded processors are used to control the various functions on the boards, such as analog and digital I/O, and heater control. These processors are controlled over a serial interface with a single high-level processor that also controls the front-panel user interface. The low-level processors all run common firmware that is bundled with the high-level firmware and loaded on power-up if a different version is detected.

Each board has a specific address that is used to identify to the firmware what functions are supported on that board. This address is also used for the communications between the low-level processors and the high-level processor.

Every tenth of a second the frequency counters, analog I/O, and digital I/O are read and written to by the low-level processor. The counters are accumulated over the past second and the analog inputs are averaged over that second. The high-level processor polls the low-level processors once per second to exchange the measurement and control data.

## Monitoring Signals

Signals are gathered from the low-level processors once per second, and then processed by the high-level processor to produce the final measurement values. The one-second accumulated counts are accumulated and reported for the user-specified averaging time. If this averaging time is greater than ten seconds, the measurement is reported every 10 seconds. The one-second average of the other analog inputs are reported directly (no additional signal conditioning is performed by the high-level processor).

## Measurement Calculations

The calculation begins by flashing the lamp 10 times per second. After the lamp flash, a sample and hold circuit on the input board is used to sample the PMT output. The raw accumulated counts are scaled according to the gain setting of the input board.

Next, the uncorrected values are determined according to a unique averaging algorithm which minimizes errors resulting from rapidly changing gas concentrations. This algorithm results in values which are stored in RAM in a circular buffer that holds all the ten second data from the previous five minutes. This data is averaged over the selected time interval, which can be any multiple of ten between 1 and 300 seconds.

The background values, which are corrected for temperature, are subtracted from their respective averages. The reading is corrected by the stored span factor and by the temperature factor.

## Operating Modes and Data Collection

In order to accommodate the data requirements of different applications, the Model 5020*i* can be run in two operating modes; a cycle based mode, and a continuous, or direct-reading mode.

In the continuous mode, the instrument provides highly time resolved data that can be used to track short-term changes in sulfate concentration. In cycle based mode, the data is stored in the instrument memory and “batch processed’ once every 5 to 60 minutes. For applications that might require real-time tracking of sulfate, the continuous operating mode will likely be selected. But, for applications where highly time-resolved data is not required, the batch oriented cycle mode will provide improved analytical performance. Details of each operating mode are presented below

## Cycle Based Operation

For most routine ambient air applications, the Model 5020*i* will be run in the automatic cycling mode with the instrument switching between the filtered and unfiltered sample streams at a pre-determined interval that is programmed in by the operator. The data will be batch-processed at the end of each filter cycle so that the background compensation can include filter based data taken both before and after the unfiltered sample reading Since ambient sulfate levels usually change slowly, the loss of time resolution will not be critical, and is usually offset by the improved limit of detection. The cycle based sulfate concentration that is reported on the front panel and over the analog output is calculated based on the average $SO_2$ concentration that was measured during the most recent sample period, minus the average background signal that was measured during the two filter periods that bracket that particular sample period. As illustrated in the simulated data tracing on the next page, these two filtered background measurements are referred to in this manual as the pre-sample filter period and the post-sample filter period. Note that because the final sulfate reading cannot be calculated until after the post-sample filter reading is complete, the cycle-based results that appear on the front panel display are typically delayed by several minutes.

When setting the unit up for operation in the automatic mode, it is important that the user understands the timing variables and the method by which the final sulfate reading is generated. Note that in the automatic cycling mode, each filter period serves as the post-sample filter reading for one cycle and as the pre-sample filter reading for the next. Since each filter reading is used in generating two data points, the sulfate reading can be updated at the end of each filter cycle. So, for example, if the sampler period and filter period are both set to 10 minutes, a new sulfate reading will be generated once every 20 minutes.

In addition to setting the filter period and sample period, the operator is also required to enter a “transition time.” The transition time is essentially a stabilization period that is triggered each time the instrument switches between the unfiltered sample mode and filtered background mode. During the transition time, the instrument continues to generate data, but that data is not used in calculating the cycle-based sulfate concentration. For example, if the filter period and sample period are both set to 5 minutes and the transition time is set to 60 seconds, the average $SO_2$ readings calculated at the end of filter period and at the end of each sample period will be based on 4 minutes worth of data. Because the transition period must occur each time the sample stream is switched, it is important not to make the sample or filter periods too short, or to set the transition time any longer than necessary.

For most installations, Thermo Fisher Scientific suggests that the sample period and the filter period should both be set to values between 5 and 10 minutes, and that the transition time should be set to between 60 and 120 seconds. The instrument is shipped with the default sample period and the default filter period both set to 5 minutes, and with the transition time set to 90 seconds. These settings, which provide one data point every 10 minutes, have been shown to provide good results in a suburban location, but the operator should also consider optimizing the settings based on their own experience, data requirements, and conditions in the local area.

In addition to the cycle based sulfate measurement that is reported on the display, and through the analog outputs, the operator should be aware that a more detailed data set, including the average and standard deviation of $SO_2$ readings taken during each measurement period, is stored in the instrument's on-board data logger. This information, which is available for downloading over the RS-232 based serial communication port, may be useful in optimizing instrument setup and timing. For example, if a comparison of the pre and post-sample filter readings indicates significant instability in the background, it maybe helpful to shorten the total cycle time to improve compensation for changes in the background. The structure of the data records and procedures for accessing these reports are described in Appendix B.

## Continuous Operation

In addition to the automated cycling mode described above, the Model 5020*i* also provides a manual-operating mode, which is referred to elsewhere in this manual as "continuous mode." In the manual/continuous operating mode, the unit switches between the filtered and unfiltered sample stream only when the operator presses the RUN button on the front panel, or whenever the unit receives the appropriate command over the RS-232 port such as, Set Filter or Set Sample. Note that the RS-232 based serial communication system does provide the capability to place the instrument under remote control from a computer system or data-logger, and that switching between filtered and unfiltered sample streams could be made contingent on other variables such as time of day, ambient NOx concentrations, or current weather conditions.

When operating in continuous mode, the instrument's internal processor calculates the current sulfate reading based on the difference between current $SO_2$ response and the average $SO_2$ reading during the most recent reading from the filtered stream. Under conditions where the background readings are stable, or at least low relative to the sulfate concentrations, the continuous operating mode can provide accurate "real-time" sulfate measurements. Although the instrument's limit of detection in continuous mode will not be as good as it is in the cycle-based mode, the time resolution will be much better.

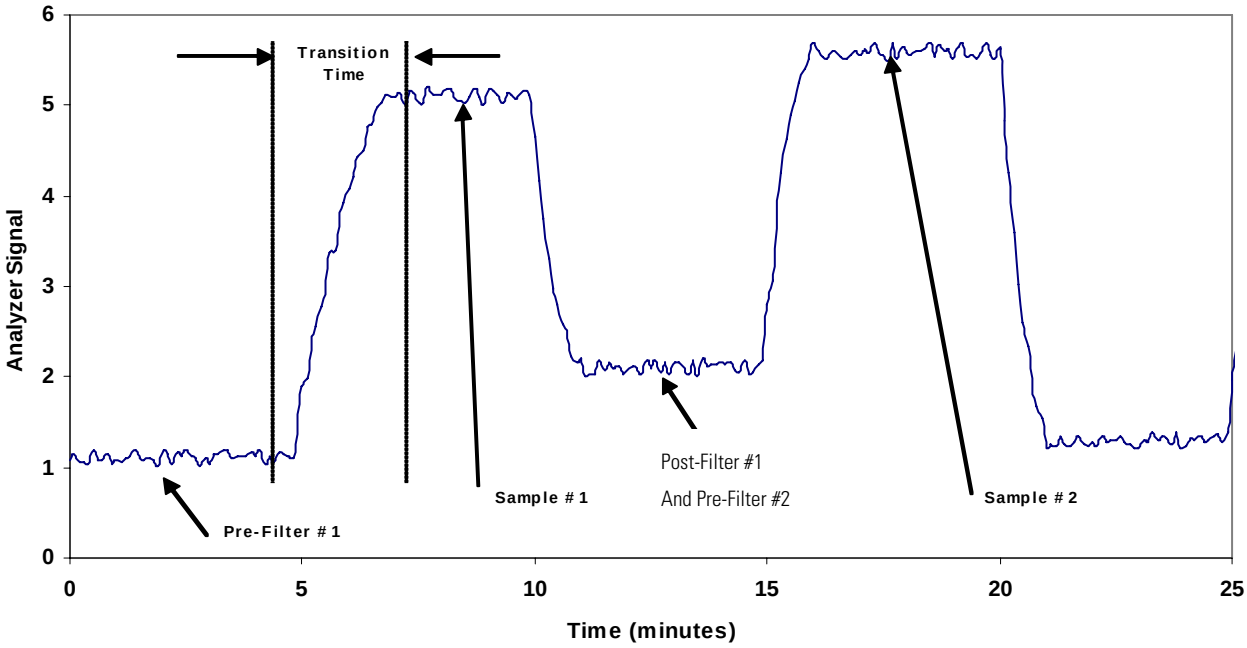


The continuous operating mode is expected to be useful for many research applications and during initial setup or trouble shooting of the instrument.

Although the choice of operating mode and frequency of background measurements will depend to some extent on the specific application, Thermo Fisher Scientific suggests that most ambient monitoring should be done with the instrument set in the automatic cycling mode with both the filter and sample duration set at five to ten minutes and a transition time of 90 seconds.

## Output Communication

The front panel display, serial and Ethernet data ports, and analog outputs are the means of communicating the results of the above calculations. The front panel display presents the $SO_4$ concentrations. The display is updated every 1-10 seconds, depending on the averaging time.

The analog output ranges are user selectable via software. The analog outputs are defaulted based on the measurement range. The defaults are calculated by dividing the data values by the full-scale range for each of the three parameters and then multiplying each result by the user-selected output range. Negative concentrations can be represented as long as they are within -5% of full-scale. The zero and span values may be set by the user to any desired value.

# Electronics

All electronics operate from a universal switching supply, which is capable of auto-sensing the input voltage and working over the entire operating range.

The internal pump and heaters all operate on 110VAC. An optional transformer is required if operating on the 210-250VAC or 90-110VAC ranges.

An on/off switch controls all power to the instrument, and is accessible on the front panel.

## Motherboard

The motherboard contains the main processor, power supplies, a sub-processor and serves as the communication hub for the instrument.

The motherboard receives operator inputs from the front panel mounted function key panel and/or over I/O connections on the rear panel and sends commands to the other boards to control the functions of the instrument and to collect measurement and diagnostic information.

The motherboard outputs instrument status and measurement data to the front-panel mounted graphics display and to the rear-panel I/O.

The motherboard also contains I/O circuitry and the associated connector to monitor external digital status lines and to output analog voltages that represent the measurement data.

Connectors located on the motherboard include:

### External Connectors

External connectors include:

- External Accessory
- RS-232/485 Communications (two connectors)
- Ethernet Communications
- I/O connector with Power Fail Relay, 16 Digital Inputs, and 6 Analog Voltage Outputs.

### Internal Connectors

Internal connectors include:

- Function key panel and Display
- Measurement Interface Board Data
- I/O Expansion Board Data

- Digital Output Board
- AC distribution

## Measurement Interface Board

The measurement interface board serves as a central connection area for all measurement electronics in the instrument. It contains power supplies and interface circuitry for sensors and control devices in the measurement system. It sends status data to the motherboard and receives control signals from the motherboard.

### Measurement Interface Board Connectors

Connectors located on the measurement interface board include:

- Data communication with the motherboard
- 24V and 120VAC power supply inputs
- Fan and solenoid outputs
- 120VAC outputs for the pump and temperature control
- Flow and pressure sensors
- Analyzer internal temperature sensor
- Bench heater
- PMT high voltage supply
- Diagnostic LED
- Input board
- Digital output board
- Front panel connector board
- Flash trigger board
- Flash intensity board

## Flow Sensor Assembly

The flow sensor assembly consists of a board containing an instrumentation amplifier and a flow transducer with input and output gas fittings. The flow transducer output is produced by measuring the pressure difference across a precision orifice. This unit is used for measuring the flow of sample gas in the measurement system.

## Pressure Transducer Assembly

The pressure transducer assembly consists of a board containing an instrumentation amplifier and a pressure transducer with a gas input fitting. The pressure transducer output is produced by measuring the pressure difference between the sample gas pressure and ambient air pressure.

## Analyzer Internal Temperature Sensor

The analyzer internal temperature sensor is used to sense the ambient temperature inside the analyzer cabinet.

## Bench Heater

The fluorescence chamber temperature is measured with a thermistor. The voltage across the thermistor is fed to the main processor for use in calculating and displaying the reaction chamber temperature. The voltage across the thermistor is also compared to a set-point voltage and used to control that the reaction chamber heaters to maintain a constant temperature.

## PMT Power Supply Assembly

The PMT power supply produces high voltage to operate the photomultiplier tube used in the measurement system. The output voltage is adjustable from approximately 600 to 1200 volts under software control.

## Diagnostic LED

The diagnostic LED is used to provide an alternate light source to the PMT to determine if the PMT is operating when the operating condition of the flash lamp is unknown.

## Input Board

The input board accepts the current signal from the PMT and converts it to a voltage, which is scaled by a factor of approximately 1, 10, or 100 depending on the full-scale range of the $SO_2$ channel. The scaled voltage signal is converted to a frequency and sent to the microprocessor.

## Digital Output Board

The digital output board connects to the motherboard and provides solenoid driver outputs and relay contact outputs to a connector located on the rear panel of the instrument. Ten relay contacts normally open (with power off) are provided which are electrically isolated from each other. Eight solenoid driver outputs (open collector) are provided along with a corresponding +24VDC supply pin on the connector.

## Front Panel Connector Board

The front panel connector board interfaces between the motherboard and the front panel mounted function key panel and graphics display. It serves as central location to tie the three connectors required for the function key panel, the graphics display control lines, and the graphics display backlight to a single ribbon cable extending back to the motherboard. This board also includes signal buffers for the graphics display control signals and a high voltage power supply for the graphics display backlight.

## Flash Trigger Board

The flash trigger board is located in the base of the flash lamp assembly. It receives high voltage and the trigger signal from the measurement interface board and uses a small transformer to produce a short, high-voltage pulse to fire the flash lamp.

## Flash Intensity Board

The flash intensity board amplifies the lamp intensity signal detected by the photodetector which is used to control the lamp voltage.

## Converter Interface Board

The converter interface board serves as a central connection area for all measurement electronics in the converter. It contains power supplies and interface circuitry for the converter heater. It sends status data to the motherboard and receives control signals from the motherboard.

### Converter Interface Board Connectors

Connectors located on the converter interface board include:

- External ambient temperature
- Pressure sensor
- Flow sensor
- S/C/Byp solenoid
- Z/S/Cal solenoid

- Fan 1
- Fan 2
- RS-485

## Converter Temperature Control Board

The converter temperature control board regulates and sets the temperature of the converter and provides AC power to the pump.

The converter temperature is measured by two thermocouples. The temperature measurements are feedback to the main processor for use in displaying and controlling the converter temperature. Protective circuitry prevents over heating in the event of broken wires to the thermocouple.

### Converter Temperature Control Board Connectors

Connectors located on the converter temperature control board include:

- Converter temperature bottom temperature/control
- Converter temperature top temperature/control
- Heater 1
- Heater 2
- Thermal fuse
- Pump
- Power switch

## I/O Expansion Board (Optional)

The I/O expansion board connects to the motherboard and adds the capability to input external analog voltage inputs and to output analog currents via a connector located on the rear panel of the instrument. It contains local power supplies, a DC/DC isolator supply, a sub-processor and analog circuits. Eight analog voltage inputs are provided with an input voltage range of 0V to10VDC. Six current outputs are provided with a normal operating range of 0 to 20 mA.

## I/O Components

External I/O is driven from a generic bus that is capable of controlling the following devices:

- Analog output (voltage and current)
- Analog input (voltage)
- Digital output (TTL levels)
- Digital input (TTL levels)

**Note** The instrument has spare solenoid valve drivers and I/O support for future expansion. ▲

## Analog Voltage Outputs

The instrument provides six analog voltage outputs. Each may be software configured for any one of the following ranges, while maintaining a minimum resolution of 12 bits:

- 0-100mV
- 0-1V
- 0-5V
- 0-10V

The user can calibrate each analog output zero and span point through firmware. At least 5% of full-scale over and under range are also supported, but may be overridden in software if required.

The analog outputs may be assigned to any measurement or diagnostic channel with a user-defined range in the units of the selected parameter. The voltage outputs are independent of the current outputs.

## Analog Current Outputs (Optional)

The optional I/O Expansion board includes six isolated current outputs. These are software configured for any one of the following ranges, while maintaining a minimum resolution of 11 bits:

- 0-20 mA
- 4-20 mA

The user can calibrate each analog output zero and span point through firmware. At least 5% of full-scale over and under range are also supported, but may be overridden in software if required.

The analog outputs may be assigned to any measurement or diagnostic channel with a user-defined range in the units of the selected parameter. The current outputs are independent of the voltage outputs. The current outputs are isolated from the instrument power and ground, but they share a common return line (Isolated GND).

## Analog Voltage Inputs (Optional)

Eight analog voltage inputs are used to gather measurement data from third-party devices. The user may assign a label, unit, and a conversion table (2 to 10 points). Each point in the conversion table consists of an analog input voltage value (0-10.5 V) and a corresponding user-defined reading value. Only two points are necessary for linear inputs, however a larger number of points may be used to approximate non-linear inputs. All voltage inputs have a resolution of 12 bits over the range of 0 to 10.5 volts.

## Digital Relay Outputs

The instrument includes one power fail relay on motherboard and ten digital output relays on the digital output board. These are reed relays rated for at least 500 mA @ 200VDC.

The power fail relay is Form C (both normally opened and normally closed contacts). All other relays are Form A (normally opened contacts) and are used to provide alarm status and mode information from the analyzer, as well as remote control to other devices, such as for controlling valves during calibration. The user may select what information is sent out each relay and whether the active state is opened or closed.

## Digital Inputs

Sixteen digital inputs are available which may be programmed to signal instrument modes and special conditions including:

- Zero Gas Mode
- Span Gas Mode
- Set Background
- Analog outputs to zero
- Analog outputs to full scale

The actual use of these inputs will vary based on analyzer configuration.

The digital inputs are TTL level compatible and are pulled up within the analyzer. The active state can be user defined in firmware.

## Serial Ports

Two serial ports allow daisy chaining so that multiple analyzers may be linked using one PC serial port.

The standard bi-directional serial interface can be configured for either RS-232 or RS-485. The serial baud rate is user selectable in firmware for standard speeds from 1200 to 19,200 baud. The user can also set the data bits, parity, and stop bits. The following protocols are supported:

- C-Link
- Streaming Data
- Modbus Slave
- Geysitech (Bayern-Hessen)

The Streaming Data protocol transmits user-selected measurement data via the serial port in real-time for capture by a serial printer, data logger, or PC.

## RS-232 Connection

A null modem (crossed) cable is required when connecting the analyzer to an IBM Compatible PC. However, a straight cable (one to one) may be required when connecting the analyzer to other remote devices. As a general rule, when the connector of the host remote device is female, a straight cable is required and when the connector is male, a null modem cable is required.

Data Format:

1200, 2400, 4800, 9600, 19200, 38400, 57600, or 115200 BAUD

8 data bits

1 stop bit

no parity

All responses are terminated with a carriage return (hex 0D)

Refer to **Table 8–1** for the DB9 connector pin configuration.

**Table 8–1.** RS-232 DB9 Connector Pin Configurations

| DB9 Pin | Function |
|---|---|
| 2 | RX |
| 3 | TX |
| 7 | RTS |
| 8 | CTS |
| 5 | Ground |

## RS-485 Connection

The instrument uses a four wire RS-485 configuration with automatic flow control (SD). Refer to **Table 8–2** for the DB9 connector pin configuration.

**Table 8–2.** RS-485 DB9 Connector Pin Configuration

| DB9 Pin | Function |
|---|---|
| 2 | + receive |
| 8 | - receive |
| 7 | + transmit |
| 3 | - transmit |
| 5 | ground |

## Ethernet Connection

An RJ45 connector is used for the 10Mbs Ethernet connection supporting TCP/IP communications via standard IPV4 addressing. The IP address may be configured for static addressing or dynamic addressing (set using a DHCP server).

Any serial port protocols may be accessed over Ethernet in addition to the serial port. Up to three simultaneous connections are allowed per protocol.

## External Accessory Connector

This port is used to in the analyzer to communicate with the converter. RS-485 signals are used to communicate with the converter interface board to monitor the converter temperature.

# Chapter 9
# Optional Equipment

## Internal Permeation Span Source

The Internal Permeation Span Source option is designed to provide a simple span check. This option is intended as a quick, convenient check to be used between zero and span calibrations for determining instrument malfunction or drift. Because this option does not precisely control dilution gas flow, it should not be used as a basis for instrument zero and span adjustments, calibration updates or adjustment of ambient data.

Whenever there is an indication of possible instrument drift or malfunction, a full zero and multipoint calibration (Level 1) should be performed prior to corrective action. For further information on zero, span and calibration of air pollution monitors, refer to Section 2.0.9 of the US EPA's *Quality Assurance Handbook for Air Pollution Measurement Systems (Volume II)*.

**Figure 9–1** shows how this option is integrated with the Model 5020*i* components. Energizing the sample valve V1 shuts off the sample flow and permits the flow of zero air for analysis. When valves V1 and V2 are energized, the flow of zero air mixes with air containing $SO_2$ from the permeation oven. This mode of operation provides a single point span check.

## Permeation Tube Installation

Use the following procedure to install the permeation tube.

1. Remove the oven cover.

2. Remove the glass chamber assembly by loosening the white plastic retaining collar, loosening (not removing) the knurled screw, and gently pulling the assembly upward. Completely remove the oven.

3. Separate the glass chamber from the top assembly by twisting and gently pulling the glass away from the top.

**Note** Keep the glass clean when handling it. ▲

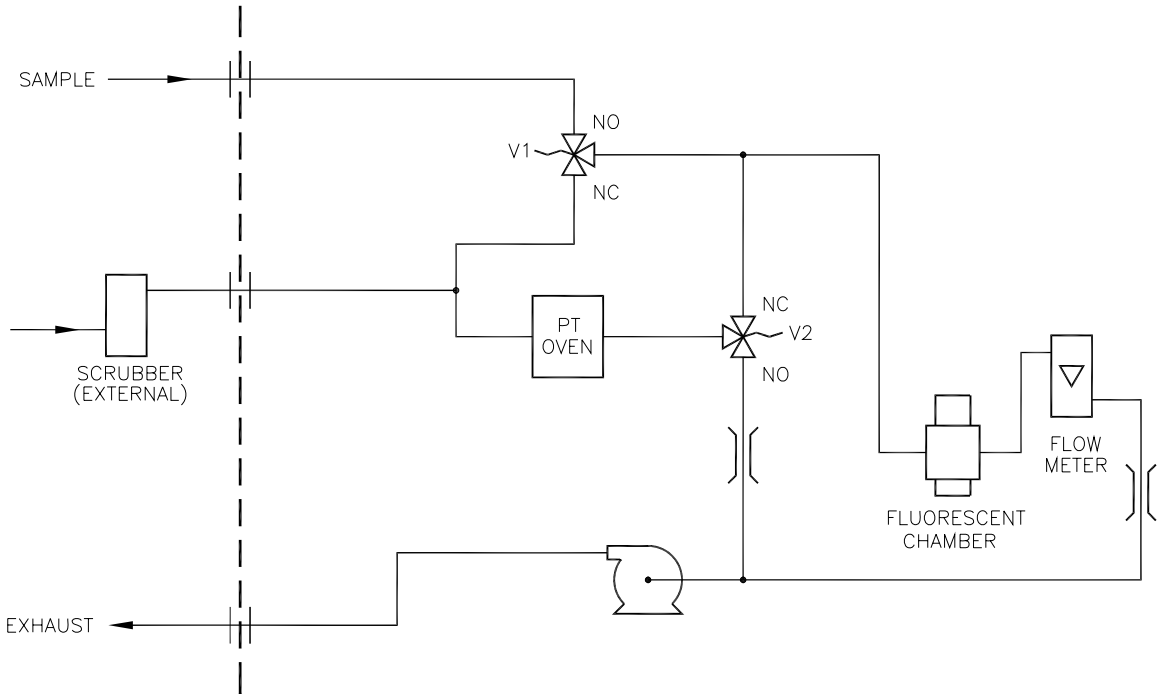


**Figure 9–1.** Internal Permeation Span Source Flow Diagram

4. Place the permeation tube or disk in the glass chamber.

5. Attach the glass chamber to the top assembly by gently pushing the two together with a slight twisting motion.

6. Replace the glass chamber assembly into the oven until the top of the assembly is flush or slightly below the top of the oven.

**Equipment Damage** Do not use tools to tighten the knurled screw in the following step. ▲

7. Tighten the knurled screw finger tight. Do not use tools to tighten.

8. Tighten the white plastic retaining collar.

9. Replace the oven cover being careful to place the tubing and wiring into the cover slot.

## Computation of Concentrations

The computation of $SO_2$ output level is shown in the following information. Note that is assumed that all devices are properly calibrated and that all flows are corrected to 25 °C and 1 atm.

Permeation Tube:

$$Output\ (ppm) = \frac{(R)(K)}{Q_o}$$

Where:

R = permeation rate in ng/min

$Q_0$ = flow rate of gas (scc/min) into the charcoal scrubber during span mode

K = constant for the specific permeant = 24.45 / MW

MW = molecular weight

$K(SO_2) = 0.382$

## Oven Installation and Configuration

Use the following procedure to install and configure the permeation oven.

1. Physically install the permeation oven and valves into the instrument and connect the cables and plumbing.

2. From the Perm Oven Settings menu in the Service menu, select **Perm Oven Selection**, then select **45 °C**.

3. Remove the thermistor from POJ1 on the measurement interface board.

4. Connect a resistance of approximately 4.2 KΩ across pins 1 and 2 of POJ1.

5. Go to the Factory Cal Gas Therm menu from the Perm Oven Settings menu in the Service menu. Select **Low Point**, enter the exact value of the resistor, wait 10 seconds for the reading to stabilize, then press [↵] to calibrate the low resistance point.

6. Press [■] to return to the Factory Cal Gas Therm menu.

7. Connect a resistance of approximately 5.0 KΩ across pins 1 and 2 of POJ1.

8. Go to the **High Point** screen, enter the exact value of the resistor, wait 10 seconds for the reading to stabilize, then press [↵] to calibrate the high resistance point.

9. Press [■] to return to the Factory Cal Gas Therm menu.

10. Remove resistor from POJ1 and re-attach the gas thermistor.

11. Connect a resistance of approximately 4.2 KΩ across pins 3 and 4 of POJ3.

12. Go to the Factory Cal Oven Therm menu from the Perm Oven Settings menu in the Service menu. Select **Low Point**, enter the exact value of the resistor, wait 10 seconds for the reading to stabilize, then press [↵] to calibrate the low resistance point.

13. Press [■] to return to the Factory Cal Oven Therm menu.

14. Connect a resistance of approximately 5.0 KΩ across pins 3 and 4 of POJ3.

15. Go to the **High Point** screen, enter the exact value of the resistor, wait 10 seconds for the reading to stabilize, then press [↵] to calibrate the high resistance point.

16. Press [■] to return to the Factory Cal Oven Therm menu.

17. Remove resistor from POJ3 and re-attach the permeation oven.

18. Perform a thermistor calibration using the “Permeation Tube Oven Calibration” procedure that follows.

## Permeation Tube Oven Calibration

There are two general approaches that can be used to calibrate the permeation tube oven. The first is to calibrate the temperature indicator very accurately (to better than 0.02 °C) and to use a permeation tube whose weight loss has been previously determined at that temperature.

**Note** An error of approximately 0.1 °C corresponds to an error of 1% in release rate. ▲

The second approach is to note that the thermistors used to measure temperature are interchangeable to better than ±0.2 °C. Thus a 1% resistor of the proper value (4.367 KΩ for 45 °C) can be used to set the span on the measurement interface board. The release rate for the permeation tube is then determined by weight loss in the actual oven being used.

### Setting Perm Oven Temperature

You can use either of the two calibration methods presented here. One method involves performing the "Setting Perm Oven Temperature" procedure and then continuing with the "Setting Temperature with Water Bath" procedure.

Alternatively, you can perform the "Setting Perm Oven Temperature" procedure and then continue with the "Setting Temperature with Known Resistance" procedure.

In either case, use the following procedure for setting the perm oven temperature.

1. Unplug POJ3 from the measurement interface board. Place a 4.367 KΩ resistor across pins 3 and 4 on the board.

From the Main Menu select Service > Perm Oven Settings > **Cal Oven Thermistor** (**Figure 9–2**).

```
CAL OVEN THERM (RESISTOR):
 CURRENTLY:      4367 Ohms
    SET TO:     04367 Ohms

        ←→ MOVE CURSOR
 ↑↓ CHANGE VALUE    ↵ SAVE

 RANGE  AVG   DIAGS ALARM
```

**Figure 9–2.** Cal Oven Therm Resistor Screen

2. Enter the exact value of the attached resistor and press [↵] to save the offset.

3. Press [■] to return to the Permeation Oven Settings menu.

4. Remove the resistor and re-attach the permeation oven to POJ3.

## Setting Temperature with Water Bath

Use the following procedure for setting the measure temperature with water bath.

1. Remove the thermistor from the permeation tube oven, but leave the thermistor connected to the measurement interface board. Insert the thermistor into the water bath next to an NIST traceable thermometer (if necessary, use an extension cable to reach).

2. Turn on the power to the water bath. Using an NIST traceable thermometer with a resolution of ±0.01 °C, adjust the water bath to 45 °C.

From the Permeation Oven Settings menu, in the Service menu, select Cal Gas Thermistor > **Water Bath**. Enter the thermistor temperature from the thermometer and press [↵] (

**Figure 9–3**).

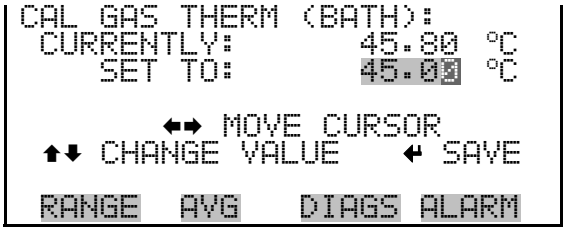


**Figure 9–3.** Cal Gas Therm Bath Screen

4. Remove the thermistor from the water bath, dry, and replace the permeation tube oven.

5. Make sure the charcoal scrubber is connected to the ZERO bulkhead on the rear panel.

6. Wait for the permeation gas temperature reading to stabilize.

## Setting Temperature with Known Resistance

Use the following procedure to set the gas temperature with an accurate known resistance.

1. Remove the thermistor from POJ1 on the measurement interface board.

2. Connect a 4.465 KΩ resistor across pins 1 and 2 of POJ1 (use a resistance substitution box and an accurate meter, if necessary).

3. From the Permeation Oven Settings menu, select **Cal Gas Thermistor**, then select known resistor.

```
CAL GAS THERM (RESISTOR):
 CURRENTLY:     4465 Ohms
    SET TO:    04465 Ohms

        ←→ MOVE CURSOR
 ↑↓ CHANGE VALUE    ↵ SAVE

 RANGE  AVG   DIAGS ALARM
```

**Figure 9–4.** Cal Gas Therm Resistor Screen

4. Enter the exact value of the attached resistor and press [↵] to save the offset.

5. Remove the resistor and reconnect the gas thermistor.

6. Make sure the charcoal scrubber is connected to the ZERO bulkhead on the rear panel.

7. Wait for the permeation gas temperature reading to stabilize.

## Determining Permeation Rate by Weight Loss

Use the following procedure to determine the permeation rate by weight loss.

1. Make sure the oven has been calibrated as described in the "Permeation Tube Oven Calibration" procedure described previously.
2. Insert the permeation tube carefully. Do not touch with fingers.
3. Turn on the instrument.
4. Wait 48-72 hours for the permeation tube to stabilize.
5. Carefully remove the permeation tube from the oven and weigh to an accuracy of 0.1mg. Perform this measurement as quickly as possible.
6. Replace the permeation tube into the oven of the instrument.
7. Repeat Steps 5 and 6 after two weeks.
8. Compute the weight loss of the permeation tube from the values determined in Steps 5 through 7.
9. Repeat Steps 5 through 8 until the weight loss has been determined to a precision of 1-2%.
10. For the most accurate work, use the permeation tube in the same oven that was used to determine the weight loss of permeation tube.

## Determining Release Rate by Transfer Standard

Use the following procedure to determine the release rate by transfer standard.

1. Make sure the oven has been calibrated as described in the "Permeation Tube Oven Calibration" procedure described previously. Also make sure that the Transfer Standard has been properly calibrated.

2. Determine the permeation rate for the permeation tube in the Transfer Standard, or install a certified permeation tube.

3. Allow the permeation tubes in both the 5020*i* and the Transfer Standard to stabilize for at least 48 hours.

4. Carefully calibrate the 5020*i* using the Transfer Standard. The output of the Transfer Standard should be connected to the SAMPLE bulkhead on the rear panel of the 5020*i*.

5. Switch the calibrated 5020*i* into the span mode.

6. Measure the flow rate into the ZERO bulkhead on the rear panel of the 5020*i*. Be sure that the charcoal scrubber is connected. Note the flow and measured $SO_2$ concentration.

7. From the flow and measured concentration, compute the permeation tube release rate.

## I/O Expansion Board Assembly

The I/O expansion board provides six analog current output channels (0-20 mA or 4-20 mA) and eight analog voltage inputs (0-10V). The DB25 connector on the rear panel provides the interface for these inputs and outputs.

### 25-Pin Terminal Board Assembly

The 25-pin terminal board assembly is included with the optional I/O expansion board. Refer to “Terminal Board PCB Assemblies” in the Installation” chapter for information on attaching the cable to the connector board. For associated part numbers, refer to the “Servicing” chapter.

## Terminal Block and Cable Kits

The optional terminal block and cable kits provide a convenient way to connect devices to the instrument. These kits break out the signals on the rear panel connector to individual numbered terminals.

Two types of terminal block and cable kits are available. One kit is for the DB37 connectors and can be used for either the analog output connector or the relay output connector. The other kit is for the DB25 connector and can be used for the optional I/O expansion board. For associated part numbers, refer to the “Servicing” chapter.

Each kit consists of:

- one six-foot cable
- one terminal block
- one snap track

**Note** Supporting all of the connections on units with the optional I/O expansion board requires:

- two DB37 kits
- one DB25 kit

## Cables

**Table 9–1** identifies the optional individual cables that are available for the instrument and **Table 9–2** provides the cable color codes. For associated part numbers, refer to the Servicing chapter.

**Note Table 9–2** provides the color coding for both 25-pin cables and 37-pin cables. Color codes for pins 1-25 are for 25-pin cables; color codes for pins 1-37 are for 37-pin cables. ▲

**Table 9–1.** Cable Options

| Description | Cable Length |
|---|---|
| DB37M to open end | Six feet |
| DB37F to open end | Six feet |
| DB25M to open end | Six feet |
| RS-232 | |

**Table 9–2.** Color Codes for 25-Pin and 37-Pin Cables

| Pin | Color | Pin | Color |
|---|---|---|---|
| 1 | BLACK | 20 | RED/BLACK |
| 2 | BROWN | 21 | ORANGE/BLACK |
| 3 | RED | 22 | YELLOW/BLACK |
| 4 | ORANGE | 23 | GREEN/BLACK |
| 5 | YELLOW | 24 | GRAY/BLACK |
| 6 | GREEN | 25 | PINK/BLACK |
| 7 | BLUE | End color codes for 25-pin cables | |

| Pin | Color | Pin | Color |
|---|---|---|---|
| | | continue for 37-pin cables. | |
| 8 | VIOLET | 26 | PINK/GREEN |
| 9 | GRAY | 27 | PIND/RED |
| 19 | WHITE | 28 | PINK/VIOLET |
| 11 | PINK | 29 | LIGHT BLUE |
| 12 | LIGHT GREEN | 30 | LIGHT BLUE/BROWN |
| 13 | BLACK/WHITE | 31 | LIGHT BLUE/RED |
| 14 | BROWN/WHITE | 32 | LIGHT BLUE/VIOLET |
| 15 | RED/WHITE | 33 | LIGHT BLUE/BLACK |
| 16 | ORANGE/WHITE | 34 | GRAY/GREEN |
| 17 | GREEN/WHITE | 35 | GRAY/RED |
| 18 | BLUE/WHITE | 36 | GRAY/VIOLET |
| 19 | VIOLET/WHITE | 37 | LIGHT GREEN/BLACK |

## Mounting Options

The analyzer can be installed in the configuration described in **Table 9–3** and shown in **Figure 9–5** through **Figure 9–8**.

**Table 9–3.** Mounting Options

| Mounting Type | Description |
|---|---|
| Bench | Positioned on bench, includes mounting feet, and front panel side-trim handles. |
| EIA rack | Mounted in an EIA-style rack, includes mounting slides, and front panel EIA-rack mounting handles. |
| Retrofit rack | This configuration is intended for replacement of a C-Series instrument in an existing rack. The rail mounting location is lower on the case and the front mounting screw slots are in non-standard EIA locations. |

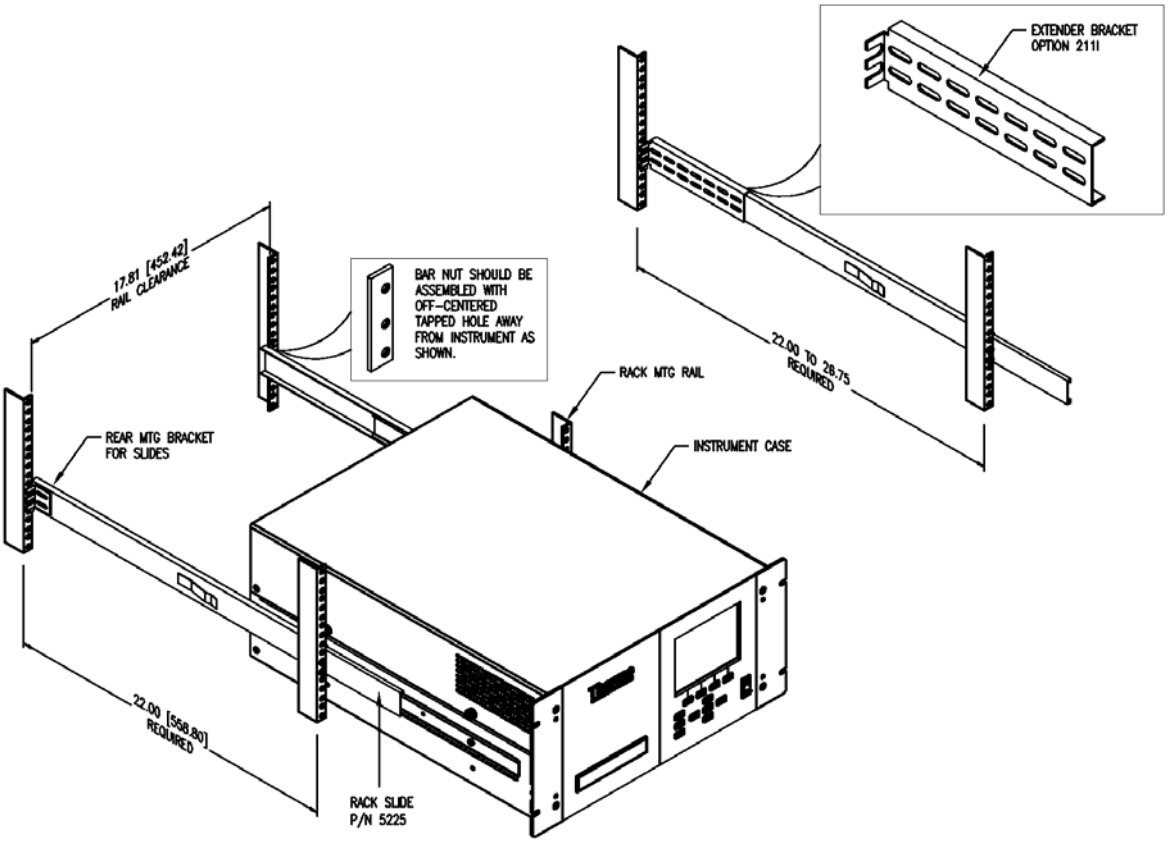


**Figure 9–5.** Rack Mount Option Assembly

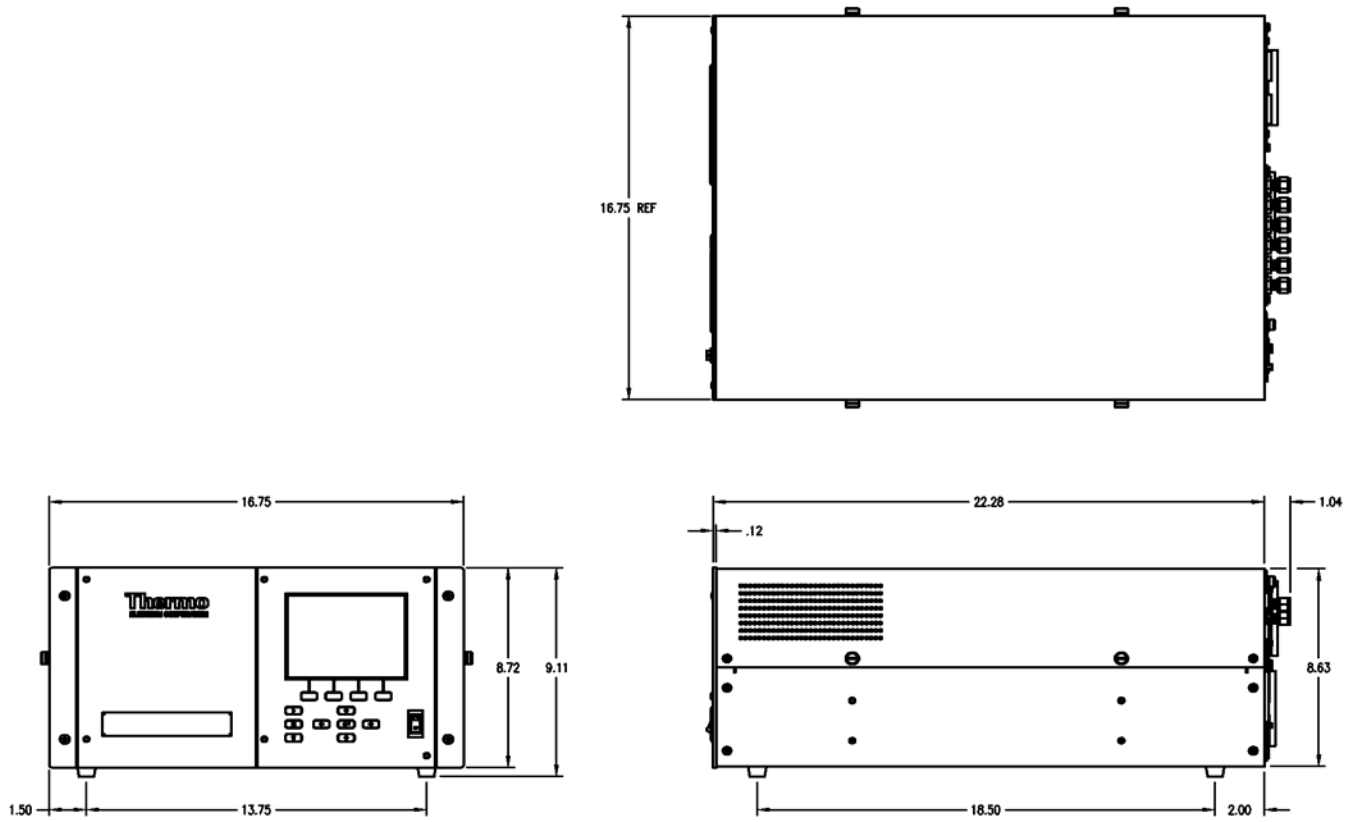


**Figure 9–6.** Bench Mounting

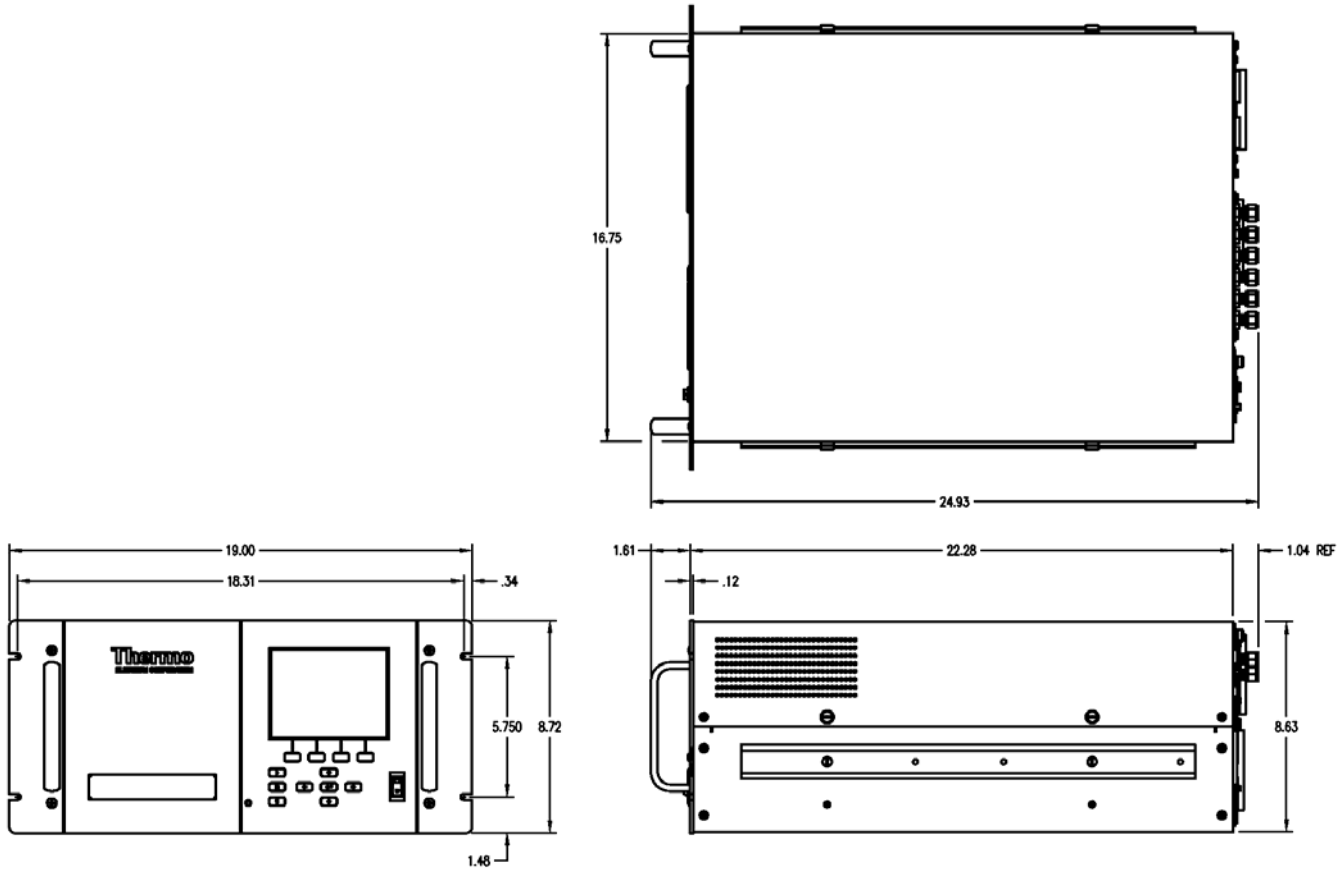


**Figure 9–7.** EIA Rack Mounting

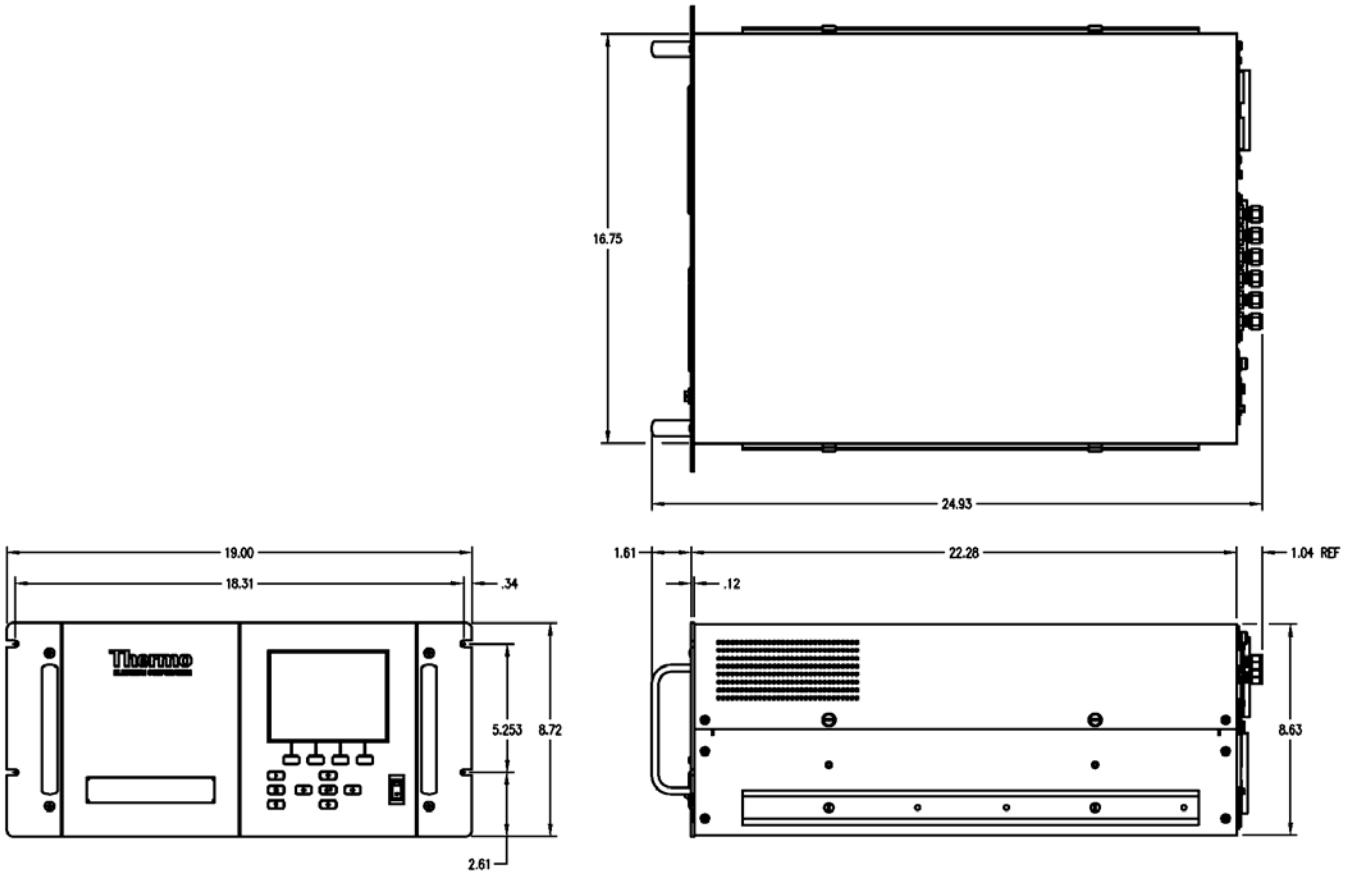


**Figure 9–8.** Retrofit Rack Mounting

# Appendix A
# Warranty

Seller warrants that the Products will operate or perform substantially in conformance with Seller's published specifications and be free from defects in material and workmanship, when subjected to normal, proper and intended usage by properly trained personnel, for the period of time set forth in the product documentation, published specifications or package inserts. If a period of time is not specified in Seller's product documentation, published specifications or package inserts, the warranty period shall be one (1) year from the date of shipment to Buyer for equipment and ninety (90) days for all other products (the "Warranty Period"). Seller agrees during the Warranty Period, to repair or replace, at Seller's option, defective Products so as to cause the same to operate in substantial conformance with said published specifications; provided that (a) Buyer shall promptly notify Seller in writing upon the discovery of any defect, which notice shall include the product model and serial number (if applicable) and details of the warranty claim; (b) after Seller's review, Seller will provide Buyer with service data and/or a Return Material Authorization ("RMA"), which may include biohazard decontamination procedures and other product-specific handling instructions; and (c) then, if applicable, Buyer may return the defective Products to Seller with all costs prepaid by Buyer. Replacement parts may be new or refurbished, at the election of Seller. All replaced parts shall become the property of Seller. Shipment to Buyer of repaired or replacement Products shall be made in accordance with the Delivery provisions of the Seller's Terms and Conditions of Sale. Consumables, including but not limited to lamps, fuses, batteries, bulbs and other such expendable items, are expressly excluded from the warranty under this warranty.

Notwithstanding the foregoing, Products supplied by Seller that are obtained by Seller from an original manufacturer or third party supplier are not warranted by Seller, but Seller agrees to assign to Buyer any warranty rights in such Product that Seller may have from the original manufacturer or third party supplier, to the extent such assignment is allowed by such original manufacturer or third party supplier.

In no event shall Seller have any obligation to make repairs, replacements or corrections required, in whole or in part, as the result of (i) normal wear and tear, (ii) accident, disaster or event of force majeure, (iii) misuse, fault or negligence of or by Buyer, (iv) use of the Products in a manner for which

they were not designed, (v) causes external to the Products such as, but not limited to, power failure or electrical power surges, (vi) improper storage and handling of the Products or (vii) use of the Products in combination with equipment or software not supplied by Seller. If Seller determines that Products for which Buyer has requested warranty services are not covered by the warranty hereunder, Buyer shall pay or reimburse Seller for all costs of investigating and responding to such request at Seller's then prevailing time and materials rates. If Seller provides repair services or replacement parts that are not covered by the warranty provided in this warranty, Buyer shall pay Seller therefor at Seller's then prevailing time and materials rates. ANY INSTALLATION, MAINTENANCE, REPAIR, SERVICE, RELOCATION OR ALTERATION TO OR OF, OR OTHER TAMPERING WITH, THE PRODUCTS PERFORMED BY ANY PERSON OR ENTITY OTHER THAN SELLER WITHOUT SELLER'S PRIOR WRITTEN APPROVAL, OR ANY USE OF REPLACEMENT PARTS NOT SUPPLIED BY SELLER, SHALL IMMEDIATELY VOID AND CANCEL ALL WARRANTIES WITH RESPECT TO THE AFFECTED PRODUCTS.

THE OBLIGATIONS CREATED BY THIS WARRANTY STATEMENT TO REPAIR OR REPLACE A DEFECTIVE PRODUCT SHALL BE THE SOLE REMEDY OF BUYER IN THE EVENT OF A DEFECTIVE PRODUCT. EXCEPT AS EXPRESSLY PROVIDED IN THIS WARRANTY STATEMENT, SELLER DISCLAIMS ALL OTHER WARRANTIES, WHETHER EXPRESS OR IMPLIED, ORAL OR WRITTEN, WITH RESPECT TO THE PRODUCTS, INCLUDING WITHOUT LIMITATION ALL IMPLIED WARRANTIES OF MERCHANTABILITY OR FITNESS FOR ANY PARTICULAR PURPOSE. SELLER DOES NOT WARRANT THAT THE PRODUCTS ARE ERROR-FREE OR WILL ACCOMPLISH ANY PARTICULAR RESULT.

# Appendix B
# C-Link Protocol Commands

This appendix provides a description of the C-Link protocol commands that can be used to remotely control a Model 5020*i* analyzer using a host device such as a PC or a datalogger. C-Link protocol may be used over RS-232, RS-485, or Ethernet. C-Link functions can be accessed over Ethernet using TCP/IP port 9880. Streaming data may be accessed over Ethernet using TCP/IP port 9881. Up to three simultaneous connections per protocol may be made over Ethernet.


- "Instrument Identification Number" on page B-1
- "Commands" on page B-2
- "Accessing Streaming Data" on page B-3
- "Measurements" on page B-9
- "Alarms" on page B-12
- "Diagnostics" on page B-16
- "Datalogging" on page B-19
- "Calibration" on on page B-28
- "Keys/Display" on page B-30
- "Measurement Configuration" on page B-31
- "Hardware Configuration" on page B-36
- "Communications Configuration" on page B-39
- "I/O Configuration" on page B-46
- "Record Layout Definition" on page B-51


## Instrument Identification Number

Each command sent to the analyzer must begin with the American Standard Code for Information Interchange (ASCII) symbol or byte value equivalent of the instrument's identification number plus 128. For example, if the instrument ID is set to 25, then each command must begin with the ACSII character code 153 decimal. The analyzer ignores any

command that does not begin with its instrument identification number. If the instrument ID is set to 0, then this byte is not required. For more information on changing Instrument ID, see Chapter 3, “Operation”.

## Commands

The analyzer must be in the remote mode in order to change instrument parameters via remote. However, the command "set mode remote" can be sent to the analyzer to put it in the remote mode. Report commands (commands that don’t begin with “set”) can be issued either in the remote or local mode. For information on changing modes, see Chapter 3, “Operation.”

The commands can be sent in either uppercase or lowercase characters. Each command must begin with the proper instrument identification number (ASCII) character. The command in the example that follows begins with the ASCII character code 135 decimal, which directs the command to the Model 5020*i,* and is terminated by a carriage return “CR” (ASCII character code 13 decimal).

| | | | | | |
|---|---|---|---|---|---|
| <ASCII 135> | T | I | M | E | <CR> |

If an incorrect command is sent, a “bad command” message will be received. The example that follows sends the incorrect command “set alarm pressure” instead of the correct command “set alarm pressure max.”

```
Send:         set alarm pressure 790
Receive:      set alarm pressure 790 bad cmd
```

**Table B–1** provides a description of the command response errors.

**Table B–1.** Command Response Error Descriptions

| Command Response | Description |
|---|---|
| too high | Supplied value is higher than the upper limit |
| too low | Supplied value is lower than the lower limit |
| invalid string | Supplied string invalid (typically because a letter was detected when the value should be numeric) |
| data not valid | Supplied value is not acceptable for entered command |
| can’t, wrong settings | Command not allowed for current measurement mode |
| can’t, mode is service | Command not allowed while instrument is in service mode |

The "save" and "set save params" commands stores parameters in FLASH. It is important that each time instrument parameters are changed, that this command be sent. If changes are not saved, they will be lost in the event of a power failure.

## Accessing Streaming Data

Streaming data is sent out the serial port or the Ethernet port on a user-defined periodic basis. Streaming data over Ethernet is only generated when a connection is made on TCP port 9881. Up to three simultaneous connections per protocol may be made over Ethernet.

## Entering Units in PPB

When interfacing to an instrument via C-link commands, always enter the concentration values in ppb units. For example, to set a background value to 20 ppm, enter 20000 (ppb) as the value for the set background command.

## Service Mode

If the Service Mode is active, C-Link "set" commands are not allowed. This is to prevent parameters from being changed remotely while the unit is being serviced locally.

## Commands List

**Table B–2** lists the 5020*i* C-Link protocol commands. The interface will respond to the command strings outlined below.

**Table B–2.** C-Link Protocol Commands

| Command | Description | Page |
|---|---|---|
| addr dns | Reports/sets dns address | B-39 |
| addr gw | Reports/sets default gateway address | B-40 |
| addr ip | Reports/sets IP address | B-40 |
| addr nm | Reports/sets netmask address | B-40 |
| addr ntp | Reports the IP address for the NTP time server | B-41 |
| agc int | Reports current AGC intensity | B-16 |
| alarm chamber temp max | Reports/sets chamber temperature alarm maximum value | B-12 |
| alarm chamber temp min | Reports/sets chamber temperature alarm minimum value | B-12 |
| alarm conc so4 max | Reports/sets current $SO_4$ concentration alarm maximum value | B-13 |
| alarm conc so4 | Reports/sets current $SO_4$ concentration alarm minimum value | B-13 |

| Command | Description | Page |
|---|---|---|
| min | | |
| alarm converter flow max | Reports/sets converter flow alarm maximum value | B-15 |
| alarm converter flow min | Reports/sets converter flow alarm minimum value | B-15 |
| alarm converter temp max | Reports/sets converter temperature alarm maximum value | B-13 |
| alarm converter temp min | Reports/sets converter temperature alarm minimum value | B-13 |
| alarm internal temp max | Reports/sets internal temperature alarm maximum value | B-14 |
| alarm internal temp min | Reports/sets internal temperature alarm minimum value | B-14 |
| alarm pressure max | Reports/sets alarm pressure maximum value | B-14 |
| alarm pressure min | Reports/sets alarm pressure minimum value | B-14 |
| alarm sample flow max | Reports/sets sample flow alarm maximum value | B-15 |
| alarm sample flow min | Reports/sets sample flow alarm minimum value | B-15 |
| alarm trig conc so4 | Reports/sets current $SO_4$ concentration alarm trigger sense | B-16 |
| allow mode cmd | Reports/sets the current set allow mode command | B-44 |
| analog iout range | Reports/sets analog current output range per channel | B-46 |
| analog vin | Retrieves analog voltage input data per channel | B-47 |
| analog vout range | Reports/sets analog voltage output range per channel | B-45 |
| auto switching | Reports/sets the status of the sample/filter automatic cycling mode | B-35 |
| avg time | Reports/sets averaging time | B-9 |
| baud | Reports/sets current baud rate | B-41 |
| bte temperature | See conv temp btm | B-19 |
| cal perm gas offset res | Sets/calibrates perm gas temperature sensor offset using a calibrating resistor in ohms | B-29 |
| cal perm gas offset temp | Sets/calibrates perm oven temperature sensor offset to a temperature in degrees C | B-29 |
| cal perm oven offset res | Sets/calibrates perm oven temperature sensor offset using a calibrating resistor in ohms | B-29 |
| cal so2 bkg | Sets/auto-calibrates $SO_2$ background | B-28 |

| Command | Description | Page |
|---|---|---|
| cal so2 coef | Sets/auto-calibrates $SO_2$ coefficient | B-28 |
| cell temperature | Reports the current temperature of the reaction cell | B-18 |
| clr lrecs | Clears away only long records that have been saved | B-19 |
| clr records | Clears away all logging records that have been saved | B-19 |
| clr srecs | Clears away only short records that have been saved | B-19 |
| coef so2 | Reports $SO_2$ coefficients | B-28 |
| contrast | Reports/sets current screen contrast | B-36 |
| conv flow | Reports the converter flow | B-18 |
| conv set temp | Reports/sets converter temperature setpoint | B-37 |
| conv temp | Reports the temperature of the top of the converter | B-10 |
| conv temp btm | Reports the temperature of the bottom of the converter | B-18 |
| conv temp top | Reports the temperature of the top of the converter | B-18 |
| converter oven | Reports whether the converter oven is on or off | B-35 |
| converter temp btm | Reports the temperature of the bottom of the converter | B-18 |
| copy lrec to sp | Sets/copies current lrec selection into the scratch pad | B-26 |
| copy sp to lrec | Sets/copies current selections in scratch pad into lrec list | B-25 |
| copy sp to srec | Sets/copies current selections in scratch pad into srec list | B-25 |
| copy sp to stream | Sets/copies current selections in scratch pad into stream list | B-25 |
| copy srec to sp | Sets/copies current srec selection into the scratch pad | B-26 |
| copy stream to sp | Sets/copies current streaming data selection into the scratch pad | B-26 |
| corrected so2 | Reports the current instrument zero corrected $SO_2$ | B-11 |
| custom | Reports/sets defined custom range concentration | B-32 |
| cycle time | Reports the next time a cycle is scheduled to occur | B-35 |
| data treatment lrec/srec | Reports/sets the current selection of data treatment for concentrations in the lrecs or srecs | B-25 |
| date | Reports/sets current date | B-37 |
| default params | Sets parameters to default values | B-38 |
| dhcp | Reports/sets state of use of DHCP | B-42 |
| diag volt iob | Reports diagnostic voltage level for I/O expansion board | B-17 |
| diag volt mb | Reports diagnostic voltage level for motherboard | B-16 |
| diag volt mib | Reports diagnostic voltage level for measurement interface board | B-17 |
| diag volt xcb | Reports the diagnostic voltage measurements on the external | B-17 |

| Command | Description | Page |
|---|---|---|
| | converter box | |
| dig in | Reports status of the digital inputs | B-48 |
| din | Reports/sets digital input channel and active state | B-48 |
| do (down) | Simulates pressing down pushbutton | B-30 |
| dout | Reports/sets digital output channel and active state | B-48 |
| dtoa | Reports outputs of the digital to analog converters per channel | B-49 |
| en (enter) | Simulates pressing enter pushbutton | B-30 |
| er | Returns a brief description of the main operating conditions in the format specified in the commands | B-21 |
| erec | Returns a snapshot of the main operating conditions (measurements and status) in the specified format | B-21 |
| erec format | Reports/sets erec format (ASCII or binary) | B-22 |
| erec layout | Reports current layout of erec data | B-23 |
| filter | Sets the analyzer sampling mode to the requested state | B-34 |
| filter background | Reports the filter background $SO_2$ ppb value | B-29 |
| filter bkg time | Reports the last filter background reading | B-19 |
| filter time | Reports the filter time | B-34 |
| flags | Reports 8 hexadecimal digits (or flags) that represent the status of the ozonator, PMT, gas mode, and alarms | B-11 |
| flow | Reports current measured sample flow in LPM | B-10 |
| format | Reports/sets current reply termination format | B-42 |
| gas mode | Reports current mode of sample, zero, or span | B-32 |
| he (help) | Simulates pressing help pushbutton | B-30 |
| host name | Reports/sets host name string | B-43 |
| instr name | Reports instrument name | B-43 |
| instrument id | Reports/sets instrument id | B-43 |
| internal temp | Reports current internal instrument temperature | B-10 |
| isc (iscreen) | Retrieves framebuffer data used for the display | B-30 |
| lamp | Sets the lamp on or off | B-38 |
| lamp int | Reports the current flash lamp intensity | B-18 |
| lamp setpoint | Reports/sets flash lamp setpoint | B-17 |
| lamp status | Reports/sets flash lamp status on or off | B-38 |
| lamp voltage | Reports flash lamp voltage | B-18 |
| layout ack | Disables stale layout/layout changed indicator ('*') | B-46 |
| le (left) | Simulates pressing left pushbutton | B-30 |

| Command | Description | Page |
|---|---|---|
| led status (led) | Reports/sets optical test LED status on or off | B-19 |
| list din | Lists current selection for digital input | B-20 |
| list dout | Lists current selection for digital output | B-20 |
| list lrec | Lists current selection lrec logging data | B-20 |
| list sp | Lists current selection in the scratchpad list | B-20 |
| list srec | Lists current selection srec logging data | B-20 |
| list stream | Lists current selection streaming data output | B-20 |
| list var aout | Reports list of analog output, index numbers, and variables | B-50 |
| list var din | Reports list of digital input, index numbers, and variables | B-50 |
| list var dout | Reports list of digital output, index numbers, and variables | B-50 |
| lr | Outputs long records in the format specified in the command | B-21 |
| lrec | Outputs long records | B-22 |
| lrec format | Reports/sets output format for long records (ASCII or binary) | B-22 |
| lrec layout | Reports current layout of lrec data | B-23 |
| lrec mem size | Reports maximum number of long records that can be stored | B-23 |
| lrec per | Reports/sets long record logging period | B-24 |
| malloc lrec | Reports/sets memory allocation for long records | B-24 |
| malloc srec | Reports/sets memory allocation for short records | B-24 |
| me (menu) | Simulates pressing menu pushbutton | B-30 |
| mode | Reports operating mode in local, service, or remote | B-43 |
| no of lrec | Reports/sets number of long records stored in memory | B-24 |
| no of srec | Reports/sets number of short records stored in memory | B-24 |
| perm gas temp | Reports the current permeation gas temperature | B-10 |
| pmt off | Turns the PMT off | B-38 |
| pmt on | Turns the PMT on | B-38 |
| pmt status | Reports/sets PMT on or off | B-38 |
| pmt voltage | Reports current PMT voltage | B-10 |
| power up mode | Reports/sets the power up mode as local or remote | B-45 |
| pres | Reports current reaction chamber pressure | B-11 |
| pres comp | Reports/sets pressure compensation on or off | B-34 |
| program no | Reports analyzer program number | B-45 |
| push | Simulates pressing a key on the front panel | B-30 |
| range | Reports/sets current $SO_4$ range | B-31 |
| react temp | Reports current reaction chamber temperature | B-11 |

| Command | Description | Page |
|---|---|---|
| relay stat | Reports/sets relay logic status to for the designated relay(s) | B-51 |
| ri (right) | Simulates pressing right pushbutton | B-30 |
| ru (run) | Simulates pressing run pushbutton | B-30 |
| sample<br>sample gas | Sets zero/span valves to sample mode | B-33 |
| sample time | Reports the sample time | B-33 |
| save | Stores parameters in FLASH | B-39 |
| save params | Stores parameters in FLASH | B-39 |
| sc (screen) | C-series legacy command that reports a generic response (Use iscreen instead) | B-31 |
| so2 | Reports current $SO_2$ concentration | B-9 |
| so2 bkg | Reports/sets current $SO_2$ background | B-28 |
| so2 coef | Reports/sets current $SO_2$ coefficient | B-28 |
| so4 | Reports the current real time $SO_4$ µg/m$^3$ reading based on the averaging time | B-9 |
| so4 cycle | Reports the current cycle based $SO_4$ µg/m$^3$ | B-10 |
| sp conc | Reports/sets span concentration | B-29 |
| sp field | Reports/sets item number and name in scratch pad list | B-26 |
| span | Sets zero/span valves to span mode | B-34 |
| sr | Reports last short record stored | B-21 |
| srec | Reports maximum number of short records | B-21 |
| srec format | Reports/sets output format for short records (ASCII or binary) | B-23 |
| srec layout | Reports current layout of short record data | B-23 |
| srec mem size | Reports maximum number of short records | B-23 |
| srec per | Reports/sets short record logging period | B-24 |
| stream per | Reposts currently set time interval for streaming data | B-27 |
| stream time | Reports/sets a time stamp to streaming data or not | B-27 |
| synch | Allows the user to re-start the sample/filter swapping periods at whatever time the command is sent to the analyzer | B-38 |
| temp comp | Reports/sets temperature compensation on or off | B-35 |
| time | Reports/sets current time (24-hour time) | B-39 |
| transition time | Reports the transition time in seconds | B-33 |
| tz | Reports the “tz” timezone string for the NTP server | B-46 |
| up | Simulates pressing up pushbutton | B-30 |
| zero | Sets zero/span valves to zero mode | B-33 |

| Command | Description | Page |
|---|---|---|
| zero gas | | |

# Measurements

**avg time**

This command reports the averaging time in seconds. The example that follows shows that the averaging time is 30 seconds, according to **Table B–3**.

```
Send:         avg time
Receive:      avg time 5:30 sec
```

**set avg time** *selection*

This command sets the averaging time according to **Table B–3**. The example that follows sets the low range averaging time to 120 seconds.

```
Send:         set avg time 8
Receive:      set avg time 8 ok
```

**Table B–3.** Averaging Times

| *Selection* | Averaging Time (seconds) |
|---|---|
| 0 | 1 seconds |
| 1 | 2 |
| 2 | 5 |
| 3 | 10 |
| 4 | 20 |
| 5 | 30 |
| 6 | 60 |
| 7 | 90 |
| 8 | 120 |

**so2**

This command reports the measured $SO_2$ concentration. The example that follows shows that the $SO_2$ concentration is 40 ppm.

```
Send:         so2
Receive:      so2 4.000E+04 ppb
```

**so4**

This command reports the current real time $SO_4$ µg/m$^3$ reading based on the averaging time.

```
Send:         so4
Receive:      so4 1.370E+00 ug/m3
```

**so4 cycle**

This command reports the current cycle based $SO_4$ µg/m$^3$.

```
Send:         so4 cycle
Receive:      so4 cycle 3.700E-01 ug/m3
```

**perm gas temp**

This command reports the current permeation gas temperature. The example that follows reports that the permeation gas temperature is 45 °C.

```
Send:         perm gas temp
Receive:      perm gas temp 45 deg C
```

**conv temp**

This command reports the current converter top temperature. The example that follows reports that the current converter temperature is 1001 °C.

```
Send:         conv temp
Receive:      conv temp 1001 deg C
```

**flow**

This command reports the current sample flow. The example that follows reports that the current sample flow is 0.503 liters/minute.

```
Send:         flow
Receive:      flow 0.503 l/m
```

**internal temp**

This command reports the current internal instrument temperature. The first reading is the temperature being used in instrument calculations. The second temperature is the actual temperature being measured. If temperature compensation is on, then both temperature readings are the same. If temperature compensation is off, a temperature of 30 °C is used as the default temperature even though the actual internal temperature is 27.2 °C. The example that follows shows that temperature compensation is on and that the internal temperature is 27.2 °C.

```
Send:         internal temp
Receive:      internal temp 27.2 deg C, actual 27.2 deg C
```

**pmt voltage**

This command reports the current PMT voltage. The example that follows reports that the current PMT voltage is -510 volts.

```
Send:         pmt voltage
Receive:      pmt voltage -510 volts
```

**corrected so2**

This command reports the current instrument zero corrected $SO_2$ in ppb.

```
Send:         corrected so2
Receive:      corrected so2 3.670E+00 ppb
```

**pres**

This command reports the current reaction chamber pressure. The first pressure reading is the pressure reading being used in instrument calculations. The second pressure is the actual pressure reading being measured. If pressure compensation is on, then both pressure readings are the same. If pressure compensation is off, a pressure of 760 mmHg is used as default pressure even though the actual pressure is 753.4 mmHg. The example that follows shows that the actual reaction chamber pressure is 753.4 mmHg and that pressure compensation is on..

```
Send:         pres
Receive:      pres 753.4 mmHg, actual 753.4 mmHg
```

**react temp**

This command reports the current reaction chamber temperature. The example that follows reports that the current reaction chamber temperature is 45.2 °C.

```
Send:         react temp
Receive:      react temp 45.2 deg C
```

**flags**

This reports 8 hexadecimal digits (or flags) that represent the status of the flash lamp, LED, pressure and temperature compensation status, gas units, gas mode, and alarms. To decode the flags, each hexadecimal digit is converted to binary as shown in the **Table B–2.** C-Link Protocol Commands

It is the binary digits that define the status of each parameter. In the example that follows, the instrument is reporting that there is no data warning alarm, it is in remote mode, temperature compensation is on, pressure compensation is off, converter is on, in auto mode, test LED is off, flash lamp is on, chamber temperature is in low alarm, and lamp intensity and lamp voltage are in high alarm.

```
Send:         flags
Receive:      flags 40028000
```

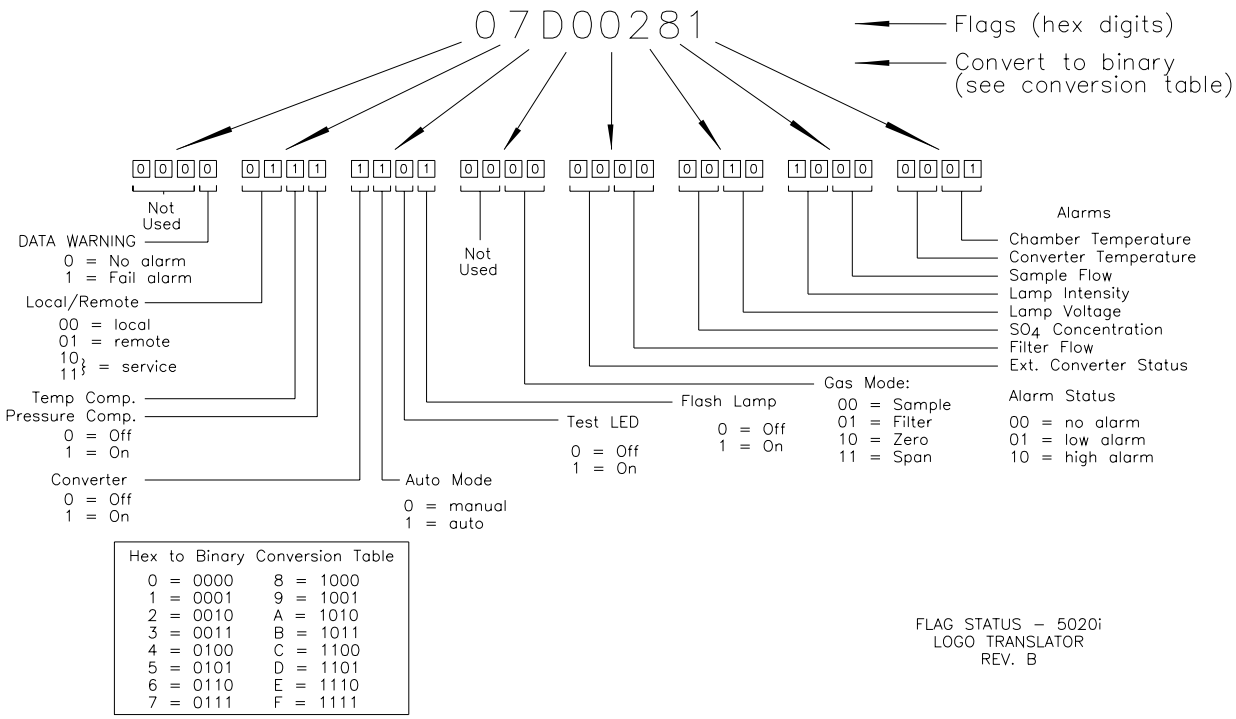


**Figure B–1.** Flags

## Alarms

**alarm chamber temp min**
**alarm chamber temp max**

These commands report the chamber temperature alarm minimum and maximum value current settings. The example that follows reports that the chamber temperature alarm minimum value is 45.0 °C.

```
Send:        alarm chamber temp min
Receive:     alarm chamber temp min 45.0 deg C
```

**set alarm chamber temp min** *value*
**set alarm chamber temp max** *value*

These commands set the chamber temperature alarm minimum and maximum values to *value*, where *value* is a floating-point number representing chamber temperature alarm limits in °C. The example that follows sets the chamber temperature alarm maximum value to 45.0 °C.

```
Send:        set alarm chamber temp max 45.0
Receive:     set alarm chamber temp max 45.0 ok
```

**alarm conc so4 min**
**alarm conc so4 max**
These commands report the $SO_4$ concentration alarm minimum and maximum values current setting. The example that follows reports that the $SO_2$ concentration minimum is 5.2 ppb.

```
Send:         alarm conc so4 min
Receive:      alarm conc so4 min 5.2 ppb
```

**set alarm conc so4 min** *value*
**set alarm conc so4 max** *value*
These commands set the $SO_4$ concentration alarm minimum and maximum values to *value,* where *value* is a floating-point representation of the concentration alarm limits. Values must be in the ppb or µg/m$^3$. Refer to "Entering Units in PPB" in this chapter. The example that follows sets the $SO_4$ concentration alarm maximum value to 80 ppm.

```
Send:         set alarm conc so4 max 80000
Receive:      set alarm conc so4 max 80000 ok
```

**alarm converter temp min**
**alarm converter temp max**
These commands report the converter temperature alarm minimum and maximum value current settings. The example that follows reports that the converter temperature alarm minimum value is 975.0 °C.

```
Send:         alarm converter temp min
Receive:      alarm converter temp min 975.0 deg C
```

**set alarm converter temp min** *value*
**set alarm converter temp max** *value*
These commands set the converter temperature alarm minimum and maximum values to *value*, where *value* is a floating-point number representing converter temperature alarm limits in °C. The example that follows sets the converter temperature alarm maximum value to 1025.0 °C.

```
Send:         set alarm converter temp max 1025
Receive:      set alarm converter temp max 1025 ok
```

**alarm internal temp min**
**alarm internal temp max**
These commands report the internal temperature alarm minimum and maximum value current settings. The example that follows reports that the internal temperature alarm minimum value is 15.0 °C.

```
Send:         alarm internal temp min
Receive:      alarm internal temp min 15.0 deg C
```

**set internal temp alarm min** *value*
**set internal temp alarm max** *value*
These commands set the internal temperature alarm minimum and maximum values to *value*, where *value* is a floating-point number representing internal temperature alarm limits in °C. The example that follows sets the internal temperature alarm maximum value to 45.0 °C.

```
Send:         set alarm internal temp max 45
Receive:      set alarm internal temp max 45 ok
```

**alarm pressure min**
**alarm pressure max**
These commands report the alarm pressure minimum and maximum value current settings. The example that follows reports that the alarm pressure minimum value is 400 mmHg.

```
Send:         alarm pressure min
Receive:      alarm pressure min 400 mmHg
```

**set alarm pressure min** *value*
**set alarm pressure max** *value*
These commands set the alarm pressure minimum and maximum values to *value,* where *value* is a floating-point number representing alarm pressure limits in millimeters of mercury. The example that follows sets the alarm pressure maximum value to 790 mmHg.

```
Send:         set alarm pressure max 790
Receive:      set alarm pressure max 790 ok
```

**alarm converter flow min**
**alarm converter flow max**
These commands report the converter flow alarm minimum and maximum value current settings. The example that follows reports that the sample flow alarm minimum value is 0.600 LPM.

```
Send:         alarm converter flow min
Receive:      alarm converter flow min 0.600 l/min
```

**set alarm converter flow min** *value*
**set alarm converter flow max** *value*
These commands set the converter flow alarm minimum and maximum values to *value,* where *value* is a floating-point number representing sample flow alarm limits in liters per minute. The example that follows sets the sample flow alarm maximum value to 0.850 LPM.

```
Send:         set alarm converter flow max 0.850
Receive:      set alarm converter flow max 0.850 ok
```

**alarm sample flow min**
**alarm sample flow max**
These commands report the sample flow alarm minimum and maximum value current settings. The example that follows reports that the sample flow alarm minimum value is 0.350 LPM.

```
Send:         alarm sample flow min
Receive:      alarm sample flow min 0.350 l/min
```

**set alarm sample flow min** *value*
**set alarm sample flow max** *value*
These commands set the sample flow alarm minimum and maximum values to *value,* where *value* is a floating-point number representing sample flow alarm limits in liters per minute. The example that follows sets the sample flow alarm maximum value to 0.600 LPM.

```
Send:         set alarm sample flow max 0.600
Receive:      set alarm sample flow max 0.600 ok
```

### alarm trig conc so4

This command reports the $SO_4$ concentration alarm trigger action for minimum alarm, current setting, to either floor or ceiling. The example that follows shows the $SO_4$ concentration minimum alarm trigger set to ceiling, according to **Table B–4**.

```
Send:         alarm trig conc so4
Receive:      alarm trig conc so4 1
```

These commands set the $SO_4$ concentration alarm minimum *value,* where *value* is set to either floor or ceiling, according to **Table B–4**. The example that follows sets the $SO_4$ concentration minimum alarm trigger to ceiling.

```
Send:         set alarm trig conc so4 1
Receive:      set alarm trig conc so4 1 ok
```

**Table B–4.** Alarm Trigger Values

| *Value* | Alarm Trigger |
|---|---|
| 00 | Floor |
| 01 | Ceiling |

## Diagnostics

### agc int

This command reports the current of the reference channel AGC circuit. The example that follows reports that the current AGC intensity is 90 percent.

```
Send:         agc int
Receive:      agc int 90 %
```

### diag volt mb

This command reports the diagnostic voltage measurements on the motherboard. The sequence of voltages is: Positive 24, positive 15, positive 5, positive 3.3, and negative 3.3. Each voltage value is separated by a space.

```
Send:         diag volt mb
Receive:      diag volt mb 24.1 14.9 4.9 3.2 -3.2
```

**diag volt mib**

This command reports the diagnostic voltage measurements on the measurement interface board. The sequence of voltages is: Positive 24, positive 15, negative 15, positive 5, and positive 3.3. Each voltage value is separated by a space.

```
Send:         diag volt mib
Receive:      diag volt mib 24.1 14.9 -14.9 4.9 3.2
```

**diag volt xcb**

This command reports the diagnostic voltage measurements on the external converter box. The sequence of voltages is: Negative 15, positive 15, and positive 24. Each voltage value is separated by a space.

```
Send:         diag volt xcb
Receive:      diag volt xcb -14.9 14.9 24.1
```

**diag volt iob**

This command reports the diagnostic voltage measurements on the I/O expansion board. The sequence of voltages is: Positive 24, positive 5, positive 3.3, and negative 3.3. Each voltage value is separated by a space.

```
Send:         diag volt iob
Receive:      diag volt iob 24.1 4.9 3.2 -3.2
```

**lamp setpoint**

This command reports the set lamp setpoint. The example that follows reports the lamp setpoint is 1000 counts.

```
Send:         lamp setpoint
Receive:      lamp setpoint 1000 counts
```

**set lamp setpoint** *value*

*value* = $0 < value < 4095$

These commands set the lamp setpoint in counts. The example that follows sets the lamp setpoint to 100 counts.

```
Send:         set lamp setpoint 100
Receive:      set lamp setpoint 100 ok
```

### lamp int

This command reports the current flash lamp intensity. The example that follows reports that the current flash lamp intensity is 3867 Hz.

```
Send:         lamp int
Receive:      lamp int 3867 Hz
```

### lamp voltage

This command reports the current flash lamp voltage. The example that follows reports that the current flash lamp voltage is -810 volts.

```
Send:         lamp voltage
Receive:      lamp voltage -810 V
```

### led

Refer to led status.

### conv temp btm
### converter temp btm

These commands report the temperature of the bottom of the converter.

```
Send:         conv temp btm
Receive:      conv temp btm 1000 deg c
```

### conv temp top
### conv temp

These commands report the temperature of the top of the converter.

```
Send:         conv temp top
Receive:      conv temp top 1000 deg c
```

### conv flow

This command reports the converter flow in liters per minute.

```
Send:         conv flow
Receive:      conv flow 0.802 l/m
```

### cell temperature

This command reports the current temperature of the reaction cell in degrees Celsius.

```
Send:         cell temperature
Receive:      cell temperature 45.2 deg C
```

**filter background time**

This command reports the last filter background reading as *ddmmmyy hh:mm*.

```
Send:         filter background time
Receive:      filter background time 21jun06 14:22
```

**bte temperature**

This command is the same as conv temp btm.

**led status**
**led**

These commands report the status of the optical test LED as on or off. The example that follows reports that the optical test LED is on.

```
Send:         led status
Receive:      led status on
```

**set led** *onoff*

These commands set the optical test LED *on* or *off*. The example that follows turns the optical test LED off.

```
Send:         set led off
Receive:      set led off ok
```

## Datalogging

**clr records**

This command will clear all long and short records that have been saved.

```
Send:         clr records
Receive:      clr records ok
```

**set clr lrecs**
**set clr srecs**

These commands will clear only the long records or only the short records that have been saved. The example that follows clears short records.

```
Send:         set clr srecs
Receive:      set clr srecs ok
```

**list din**
**list dout**

These commands report the current selection for the digital outputs in the format. Output no Index number variable name active state. The active state for digital outputs is open or closed. The active state for digital inputs is high or low.

```
Send:         list dout
Receive:      list dout
              output index variable state
              1 8 SO4 CONC MAX closed
              2 2 ZERO MODE open
              3 7 GEN ALARM closed
              4 11 CHAMB TEMP open
              7 7 SAMPLE MODE open
              8 21 FLASH VOLTS open
```

**list lrec**
**list srec**
**list stream**
**list sp**

These commands report the list of current selections for long record logging data, short record logging data, streaming data output, or the scratch pad (sp) list.

The scratch pad is a temporary memory area which is used to set up lists of selections for lrec, srec, or streaming data items. The user can copy any of these lists to the scratch pad, modify individual elements in the list, then save the scratch pad back to the original list. Refer to the “sp field” command for information on how to edit the scratch pad.

The example that follows shows the list for streaming data output.

```
Send:         list stream
Receive:      list stream
              field index variable
              x x time
              1 2 so4c
              2 22 pmtv
```

**er** *xy*
**lr** *xy*
**sr** *xy*
*x* = | 0 | 1 | : Reply termination format (see "set format *format*" command)
*y* = | 0 | 1 | 2 | : Output format (see "set erec/lrec/srec format *format*" command)

These commands report the last long or short records stored and dynamic data. In the example that follows, the command requests a long record with no checksum, in ASCII format with text. For details on how to decode the flag fields within these records, see the "flags" command.

```
Send:         lr01
Receive:      lr01
                  15:32 06-22-06  flags 3919156 so2 0.000 so4c 0.000
                  so4b 0.000 f0avg 0.000 f0pts 0.000 f1avg 0.000
                  f1pts 0.000 savg 0.000 spts 0.000 intt 112.190 rctt
                  116.643 cnvtp 0.000 cnvbt 0.000 pres 0.000 smplfl
                  0.000
```

**erec**
This command returns a snapshot of the main operating conditions (measurements and status) at the time the command is issued. The example that follows shows a typical response.

The format is defined by the current settings of the "format" and "erec format" commands. For details on erec formatting, see the "Record Layout Definition" section at the end of this appendix. For details on how to decode the flag fields within these records, see the "flags" command.

```
Send:         erec
Receive:      erec
                  16:18 06-22-06 flags 3909156 so2 0.000  1 loso2
                  0.000  1 pmtv 0.000 FlshV 0.000 Intt 112.190 Rctt
                  116.643 PGast 0.000 Smpfl 0.000 Pres 0.000 avgt 0
                  lo avgt 10 SO2bkg 0.000 SO2 coef 1.000 lo SO2 coef
                  1.000 SO2range 75.000 SO4range 75.000 Lmpi 0.000
                  fltbkg 0.000 cflow 0.000 ctmp 0.000 tamb -45.000
                  pamb 0.000 so4c 0.000 so4b 0.000
```

**lrec**
**srec**
**lrec** *xxxx yy*
**srec** *xxxx yy*
**lrec** *aa:bb oo-pp-qq yy*
**srec** *aa:bb oo-pp-qq yy*
*xxxx* = the number of past records
*yy* = the number of records to return (1 to 10)
*aa* = hours (01 to 24)
*bb* = minutes (01 to 59)
*oo* = month (01 to 12)
*pp* = day (01 to 31)
*qq* = year

These commands output long or short records. The output format is determined by the "set lrec format" and "set srec format" commands. The logging time is determined by the "set lrec per" and "set srec per" commands.

In the following example, there are 740 long records currently stored in memory. When the command lrec 100 5 is sent, the instrument counts back 100 records from the last record collected (record 740), and then returns 5 records: 640, 641, 642, 643, and 644. For details on how to decode the flag fields within these records, see the "flags" command.

```
Send:         lrec 4 2
Receive:      lrec 4 2
                      15:33 06-22-06 flags 3919156 so2 0.000 so4c
                      0.000 so4b 0.000 f0avg 0.000 f0pts 0.000 f1avg
                      0.000 f1pts 0.000 savg 0.000 spts 0.000 intt
                      112.190 rctt 116.643 cnvtp 0.000 cnvbt 0.000
                      pres 0.000 smplfl 0.000 16:18 06-22-06  flags
                      3909156 so2 0.000 so4c 0.000 so4b 0.000 f0avg
                      0.000 f0pts 0.000 f1avg 0.000 f1pts 0.000 savg
                      0.000 spts 0.000 intt 0.000 smplfl 0.000*
```

**erec format**
**lrec format**
**srec format**
These commands report the output format for long and short records, and dynamic data in various formats such as ASCII without text, ASCII with text, or binary. The example that follows shows the output format for long records is ASCII with text, according to **Table B–5**.

```
Send:         lrec format
Receive:      lrec format 01
```

**set erec format** *format*
**set lrec format** *format*
**set srec format** *format*
These commands set the output format for long and short records, and dynamic data, according to **Table B–5**. The example that follows sets the long record output format to ASCII with text.

```
Send:         set lrec format 1
Receive:      set lrec format 1 ok
```

**Table B–5.** Record Output Formats

| *Format* | **Output Format** |
|---|---|
| 0 | ASCII no text |
| 1 | ASCII with text |
| 2 | binary data |

**erec layout**
**lrec layout**
**srec layout**
These commands reports the layout (string indicating the data formats) for data that is sent out in response to the erec, lrec, srec, and related commands The example that follows shows a typical response. For details on how to interpret the strings, see “Record Layout Definition” later in this appendix.

```
Send:         lrec layout
Receive:      lrec layout %s %s %lx %f %f %f %f %f %f %f %f %f %f %f
                          %f %f %f %f t D L f f f f f f f f f f f f f
                          f f flags so2 so4c so4b f0avg f0pts f1avg
                          f1pts savg spts intt rctt cnvtp cnvbt pres
                          smplfl
```

**lrec mem size**
**srec mem size**
These commands report the number of lrecs and srecs that can be stored with the current settings and the number of blocks reserved for lrecs and srecs. The example that follows shows that 1075 blocks were reserved for lrecs and the maximum number of lrecs that can be stored in memory is 241979. Memory allocation can be changed using the malloc command.

```
Send:         lrec mem size
Receive:      lrec mem size 241979 recs, 1075 blocks
```

**lrec per**
**srec per**
These commands report the long and short records logging period. The example that follows shows that the short record logging period is 5 minutes.

```
Send:         srec per
Receive:      srec per 5 min
```

**set srec per** *value*
**set srec per** *value*
*value* = | 1 | 5 | 15 | 30 | 60 |

These commands set the long and short records logging period to *value* in minutes. The example that follows sets the long record logging period to 15 minutes.

```
Send:         set lrec per 15
Receive:      set lrec per 15 ok
```

**no of lrec**
**no of srec**
These commands report the number of long and short records stored in the long and short records memory. The example that follows shows that 50 long records have been stored in the memory.

```
Send:         no of lrec
Receive:      no of lrec 50 recs
```

**malloc lrec**
**malloc srec**
These commands report the currently set memory allocation for long and short records in percent of total memory.

```
Send:         malloc lrec
Receive:      malloc lrec 10%
```

**set malloc lrec** *value*
**set malloc srec** *value*
*value* = 0 to 100
These commands set the percent of memory space allocated for long and short records to *value*, where *value* is a floating-point number representing

percent. The example that follows sets the memory allocation for long records to 10.

**Note** Issuing these commands will clear all the logging data memory. All the existing records should be retrieved using appropriate commands, if required. ▲

```
Send:         set malloc lrec 10
Receive:      set malloc lrec 10 ok
```

---

**data treatment lrec**
**data treatment srec**
These commands report the current selection of data treatment for concentrations in the long records (lrecs) or short records (srecs). The example that follows reports the data treatment for concentrations in lrec is minimum.

```
Send:         data treatment lrec
Receive:      data treatment lrec min
```

**set data treatment lrec** *string*
**set data treatment srec** *string*
*string* = | cur | avg | min | max |
These commands set the data treatment to *string*, where *string* is current, average, minimum, or maximum for the concentration values recorded in the long records (lrecs) or short records (srecs). The example that follows sets the data treatment for concentrations in lrec to minimum.

```
Send:         set data treatment lrec min
Receive:      set data treatment lrec min ok
```

---

**set copy sp to lrec**
**set copy sp to srec**
**set copy sp to stream**
These commands copy the current selections in scratch pad (sp) into the long record, short record, or streaming data list.

The scratch pad is a temporary memory area which is used to set up lists of selections for lrec, srec, or streaming data items. The user can copy any of these lists to the scratch pad, modify individual elements in the list, then save the scratch pad back to the original list. Refer to the “sp field” command for information on how to edit the scratch pad.

The example that follows copies the current list in scratch pad into the long records list.

```
Send:         set copy sp to lrec
Receive:      set copy sp to lrec ok
```

---

**set copy lrec to sp**
**set copy srec to sp**
**set copy stream to sp**
These commands copy the current contents of the long record, short record, or streaming data list into the scratch pad (sp). These commands are useful in easy modification of current long record, short record, or streaming data lists.

The scratch pad is a temporary memory area which is used to set up lists of selections for lrec, srec, or streaming data items. The user can copy any of these lists to the scratch pad, modify individual elements in the list, then save the scratch pad back to the original list. Refer to the "sp field" command for information on how to edit the scratch pad.

The example that follows copies the current list of long records into the scratch pad.

```
Send:         set copy lrec to sp
Receive:      set copy lrec to sp ok
```

---

**sp field** *number*
This command reports the variable *number* and name stored at index in the scratch pad list.

The scratch pad is a temporary memory area which is used to set up lists of selections for lrec, srec, or streaming data items. The user can copy any of these lists to the scratch pad, modify individual elements in the list, then save the scratch pad back to the original list.

The example that follows shows that the field 1 in the scratch pad is set to index number 2, which is for the variable $SO_4$ concentration.

```
Send:         sp field 1
Receive:      sp field 1 1 so4c
```

**set sp field** *number value*
*number* = 1-32 is the maximum number of fields in long and short record lists.
*number* = 1-8 is for streaming data lists.
This command sets the scratch pad field *number* (item number in scratch pad list) to *value*, where v*alue* is the index number of a variable in the analog out variable list. Available variables and their corresponding index numbers may be obtained using the command "list var aout". The "set sp field" command is used to create a list of variables which can then be

transferred into the long record, short record, or streaming data lists, using the “set copy sp to lrec”, “set copy sp to srec”, or “set copy sp to stream” commands.

```
Send:         set sp field 1 1
Receive:      set sp field 1 1 ok
```

---

**stream per**
This command reports the currently set time interval in seconds for streaming data.

```
Send:         stream per
Receive:      stream per 10
```

**set stream per** *number value*
*number value* = | 1 | 2 | 5 | 10 | 20 | 30 | 60 | 90 |120 | 180 | 240 | 300 |

This command sets the time interval between two consecutive streaming data strings to *number value* in seconds. The example that follows sets the number value to 10 seconds.

```
Send:         set stream per 10
Receive:      set stream per 10 ok
```

---

**stream time**
This command reports if the streaming data string will have a time stamp attached to it or not, according to **Table B–6**.

```
Send:         stream time
Receive:      stream time 0
```

**set stream time** *value*
This command enables *value,* where *value* is to attach or disable time stamp to streaming data string, according to **Table B–6**. The example that follows attaches a time stamp to streaming data.

```
Send:         set stream time 0
Receive:      set stream time 0 ok
```

**Table B–6.** Stream Time Values

| *Value* | **Stream Time** |
|---|---|
| 00 | Attaches time stamp to streaming data string |
| 01 | Disables time stamp to streaming data string |

# Calibration

**set cal so2 coef**

This command will auto-calibrate $SO_2$ coefficients based on $SO_2$ span gas concentrations. The example that follows shows a successful auto-calibration of the $SO_2$ coefficient.

```
Send:         set cal so2 coef
Receive:      set cal so2 coef ok
```

**set cal so2 bkg**

This command will auto-calibrate the $SO_2$ background. The example that follows shows a successful auto-calibration of the $SO_2$ background.

```
Send:         set cal so2 bkg
Receive:      set cal so2 bkg ok
```

**so2 coef**
**coef so2**

These commands report $SO_2$ coefficients. The example that follows reports that the $SO_2$ coefficient is 1.200.

```
Send:         so2 coef
Receive:      so2 coef 1.200
```

**set so2 coef** *value*
**set coef so2** *value*

These commands set the $SO_2$ coefficients to user-defined values to *value*, where *value* is a floating-point representation of the coefficient. The example that follows sets the $SO_2$ coefficient to 1.200.

```
Send:         set so2 coef 1.200
Receive:      set so2 coef 1.200 ok
```

**so2 bkg**

This command reports the current $SO_2$ backgrounds. The example that follows reports that the $SO_2$ background is 2.1 ppb.

```
Send:         so2 bkg
Receive:      so2 bkg 2.1 ppb
```

**set so2 bkg** *value*

This command is used to set $SO_2$ backgrounds to user-defined values to *value*, where *value* is a floating-point representation of the background in current selected units. The example that follows sets the $SO_2$ background to 2.1 ppb.

```
Send:         set so2 bkg 2.1
Receive:      set so2 bkg 2.1 ok
```

**sp conc**

This command reports span concentration in single range mode, or the high and low span concentrations in dual or auto range mode. The example that follows reports the span gas concentration.

```
Send:         sp conc
Receive:      sp conc 20
```

**set sp conc** *value*

This command sets the span concentrations to user-defined values to *value*, where *value* is a floating-point representation of the span concentration in current selected units. The example that follows sets the span concentration to 20 ppb.

```
Send:         set sp conc 20
Receive:      set sp conc 20 ok
```

**set cal perm gas offset res** *res*

This command calibrates the permeation gas temperature sensor offset using a calibrating resistor of value *res* in ohms.

```
Send:         set cal perm gas offset res 5000
Receive:      set cal perm gas offset res 5000 ok
```

**set cal perm gas offset temp**

This command calibrates the permeation gas temperature sensor offset to a temperature of *temp* in degrees C.

```
Send:         set cal perm gas offset temp 34.5
Receive:      set cal perm gas offset temp 34.5 ok
```

**set cal perm oven offset res**

This command calibrates the permeation oven temperature sensor offset using a calibrating resistor of value *res* in ohms.

```
Send:         set cal perm oven offset res 5000
Receive:      set cal perm oven offset res 5000 ok
```

**filter background**

This command reports the filter background $SO_2$ ppb value.

```
Send:         filter background
Receive:      filter background 1.020E+00 ppb
```

**set filter background** *d.dd*
This command sets the filter background to the value *d.dd*.

```
Send:         set filter background 1.54
Receive:      set filter background 1.54 ok
```

## Keys/Display

**push** *button*
*button* = | do | down | en | enter | he | help | le | left | me | menu | ri | right | ru | run | up | 1 | 2 | 3 | 4 |

These commands simulates pressing the front panel pushbuttons. The numbers represent the front-panel soft keys, from left to right.

```
Send:         push enter
Receive:      push enter ok
```

**isc**
**iscreen**
This command retrieves the framebuffer data used for the display on the iSeries instrument. It is 19200 bytes in size, 2-bits per pixel, 4 pixels per byte arranged as 320 by 240 characters. The data is sent in RLE encoded form to save time in transmission. It is sent as a type '5' binary c_link response with no checksum.

The RLE encoding consists of a 0 followed by an 8-bit count of consecutive 0xFF bytes. The following 'c' code will expand the incoming data.

```
void      unpackDisplay ( void far* tdib, unsigned char far* rlescreen )
{
int i,j,k;
unsigned char far *sc4bpp, *sc2bpp, *screen, *ptr;

   ptr = screen = (unsigned char far *)malloc(19200);
   //RLE decode the screen
   for (i=0; i<19200 && (ptr - screen) < 19200; i++)
   {
      *(ptr++) = *(rlescreen + i);
      if (*(rlescreen + i) == 0)
      {
         unsigned char rlecount = *(unsigned char *)(rlescreen + ++i);
```

```
            while (rlecount)
            {
               *(ptr++) = 0;
               rlecount--;
            }
         }
         else if (*(rlescreen + i) == 0xff)
         {
            unsigned char rlecount = *(unsigned char *)(rlescreen + ++i);

            while (rlecount)
            {
               *(ptr++) = 0xff;
               rlecount--;
            }
         }
      }
   }
```

To convert this data into a BMP for use with windows, it needs to be turned into a 4BPP as that is the smallest windows can display. Also note that BMP files are upside down relative to this data, i.e. the top display line is the last line in the BMP.

---

**sc**

**screen**

This command is meant for backward compatibility on the C series. Screen information is reported using the "iScreen" command above.

```
Send:         screen
Receive:      screen
              This is an I series
              Instrument. Screen
              Information not
              Available
```

---

## Measurement Configuration

**range**

This command reports $SO_2$ range in single range mode, or the high and low ranges in dual or auto range mode. The example that follows reports that the $SO_4$ full-scale range is 10 µg/m$^3$, according to **Table B–7**.

```
Send:         range
Receive:      range 0: 1.000E+01 ug/m3
```

**set range** *Selection*
This command selects the $SO_2$ full-scale ranges, according to **Table B–7**. The example that follows sets the $SO_4$ full-scale range to 75 µg/m³.

```
Send:         set range 1
Receive:      set range 1 ok
```

**Table B–7.** Standard Ranges

| *Selection* | µg/m³ |
|---|---|
| 0 | 10.0 |
| 1 | 75.0 |

---

**custom** *range*
*range* = | 1 | 2 | 3 |

This command reports the user-defined value of custom *range* 1, 2, or 3. The example that follows reports that custom range 1 is defined to 5.5 µg/m³.

```
Send:         custom 1
Receive:      custom 1 5.500E+00 ug/m3
```

**set custom** *range* **range** *value*
**set custom 1 range** *value*
**set custom 2 range** *value*
**set custom 3 range** *value*
These commands are used to set the maximum concentration for any of the three custom *ranges* 1, 2, or 3 to range *value*, where *value* is a floating-point number representing concentration in µg/m³. The example that follows sets the custom 1 range to 55.5 µg/m³.

```
Send:         set custom 1 range 5.55
Receive:      set custom 1 range 5.55 ok
```

---

**gas mode**
This command reports the current mode of sample, zero, or span. The example that follows reports that the gas mode is sample.

```
Send:         gas mode
Receive:      gas mode sample
```

**sample time**
This command reports the sample time.

```
Send:         sample time
Receive:      sample time 7 minutes
```

**set sample time** *d*
This command sets the sample time to the value d in minutes. Values outside the allowable range of 1 to 600 minutes will be rejected. The example that follows sets the sample time to 10 minutes.

```
Send:         set sample time 10
Receive:      set sample time 10 ok
```

**transition time**
This command reports the transition time in seconds.

```
Send:         transition time
Receive:      transition time 60
```

**set transition time** *ddd*
This command sets the transition time to the value *ddd* in seconds. Values outside the allowed range of 2 to 999 seconds will be rejected. The example that follows sets the transition time to 120 seconds.

```
Send:         set transition time 120
Receive:      set transition time 120 ok
```

**set sample**
This command sets the zero/span valves to the sample mode. The example that follows sets the instrument to sample mode, that is, the instrument is reading the sample gas.

```
Send:         set sample
Receive:      set sample ok
```

**set zero**
This command sets the zero/span valves to the zero mode. The example that follows sets the instrument to zero mode that is, the instrument is reading the sample gas.

```
Send:         set zero
Receive:      set zero ok
```

**set filter**

This command changes the analyzer sampling mode to the requested state. This command has no effect if the analyzer is cycling automatically.

```
Send:         set filter
Receive:      set filter ok
```

**set span**

This command sets the zero/span valves to the span mode. The example that follows sets the instrument to span mode that is, the instrument is sampling span gas.

```
Send:         set span
Receive:      set span ok
```

**pres comp**

This command reports whether pressure compensation is on or off. The example that follows shows that pressure compensation is on.

```
Send:         pres comp
Receive:      pres comp on
```

**set pres comp** *onoff*

These commands turn the pressure compensation *on* or *off*. The example that follows turns pressure compensation off.

```
Send:         set pres comp off
Receive:      set pres comp off ok
```

**filter time**

This command reports the filter time.

```
Send:         filter time
Receive:      filter time 30 min
```

**set filter time** *d*

This command sets the filter time to the value d in minutes. Values outside the allowed range of 1 to 240 minutes will be rejected. The example that follows sets the filter time to 60 minutes.

```
Send:         set filter time 60
Receive:      set filter time 60 ok
```

**cycle time**
This command reports the next time a cycle is scheduled to occur as *hh:mm:ss dd-mm-yyyy*.

```
Send:         cycle time
Receive:      cycle time 06:14:35 06-21-06
```

**set cycle time** *hh:mm:ss dd-mm-yyyy*
This command sets the time for the cycle to start. The example that follows shows a cycle time setting.

```
Send:         cycle time 06:14:35 06-21-06
Receive:      cycle time 06:14:35 06-21-06 ok
```

**converter oven**
This command reports whether the converter oven is on or off

```
Send:         converter oven
Receive:      converter oven on
```

**set converter** *onoff*
These commands turn the converter oven *on* or *off*. The example that follows turns converter oven off.

```
Send:         set converter oven off
Receive:      set converter oven off ok
```

**auto switching**
This command reports the status of the sample/filter automatic cycling mode.

```
Send:         auto switching
Receive:      auto switching on
```

**set auto switching** *onoff*
These commands set the sample filter auto switching on or off. The example that follows sets auto switching off.

```
Send:         set auto switching off
Receive:      set auto switching off ok
```

**temp comp**
This command reports whether temperature compensation is on or off. The example that follows shows the temperature compensation is off.

```
Send:         temp comp
Receive:      temp comp off
```

**set temp comp** *onoff*
These commands turn the temperature compensation *on* or *off*. The example that follows turns temperature compensation off.

```
Send:         set temp comp off
Receive:      set temp comp off ok
```

## Hardware Configuration

**contrast**
This command reports the screen's level of contrast. The example that follows shows the screen contrast is 50%, according to **Table B–8**.

```
Send:         contrast
Receive:      contrast 10:50%
```

**set contrast** *level*
This command sets the screen's *level* of contrast, according to **Table B–8**. The example that follows sets the contrast level to 50%.

```
Send:         set contrast 10
Receive:      set contrast 10 ok
```

**Table B–8.** Contrast Levels

| *Level* | Contrast Level |
|---|---|
| 0 | 0% |
| 1 | 5% |
| 2 | 10% |
| 3 | 15% |
| 4 | 20% |
| 5 | 25% |
| 6 | 30% |
| 7 | 35% |
| 8 | 40% |
| 9 | 45% |
| 10 | 50% |
| 11 | 55% |
| 12 | 60% |
| 13 | 65% |

| *Level* | Contrast Level |
|---|---|
| 14 | 70% |
| 15 | 75% |
| 16 | 80% |
| 17 | 85% |
| 18 | 90% |
| 19 | 95% |
| 20 | 100% |

**conv set temp**

This command reports the temperature that the converter is set to. The example that follows reports that the converter temperature is set to 975 °C.

```
Send:         conv set temp
Receive:      conv set temp 975 deg C
```

**set conv set temp** *value*

This command sets the temperature that the converter is set to *value*, where *value* is an integer representing °C. The example that follows sets the converter temperature to 1005 °C.

```
Send:         set conv set temp 1005
Receive:      set conv set temp 1005 ok
```

**date**

This command reports the current date. The example that follows reports the date as May 4, 2007.

```
Send:         date
Receive:      date 5-04-07
```

**set date** *mm-dd-yy*

*mm* = month
*dd* = day
*yy* = year

This command sets the date of the analyzer's internal clock. The example that follows sets the date to December 1, 2004.

```
Send:         set date 12-01-04
Receive:      set date 12-01-04 ok
```

**set default params**

This command sets all the parameters to their default values. This does not affect the factory-calibrated parameters.

```
Send:         set default params
Receive:      set default params ok
```

**lamp status**

This command reports the status of the flash lamp on or off. The example that follows reports the flash lamp is on.

```
Send:         lamp status
Receive:      lamp status on
```

**set lamp** *onoff*
**lamp**

These commands set the flash lamp *on* or *off*. The example that follows turns the flash lamp off.

```
Send:         set lamp off
Receive:      set lamp off ok
```

**pmt status**

This command reports the status of the PMT on or off. The example that follows reports that the PMT is on.

```
Send:         pmt status
Receive:      pmt status on
```

**set pmt** *onoff*
**pmt on**
**pmt off**

These commands set the PMT *on* or *off*. The example that follows turns the PMT off.

```
Send:         set pmt off
Receive:      set pmt off ok
```

**synch**

This command allows the user to re-start the sample/filter swapping periods at whatever time the command is sent to the analyzer. The command causes the analyzer to reset the cycle-based data collectors if the analyzer is in the auto mode.

```
Send:         set synch
Receive:      set synch ok
```

**save**
**set save params**
This command stores all current parameters in FLASH memory. It is important that each time instrument parameters are changed, that this command be sent. If changes are not saved, they will be lost in the event of a power failure. The example that follows saves the parameters to FLASH memory.

```
Send:         set save params
Receive:      set save params ok
```

**time**
This command reports the current time (24-hour time). The example that follows reports that the internal time is 2:15:30 pm.

```
Send:         time
Receive:      time 14:15:30
```

**set time** *hh:mm:ss*
*hh* = hours
*mm* = minutes
*ss* = seconds
This command sets the internal clock (24-hour time). The example that follows sets the internal time to 2:15 pm.

**Note** If seconds are omitted, the seconds default to 00. ▲

```
Send:         set time 14:15
Receive:      set time 14:15 ok
```

## Communications Configuration

**addr dns**
This command reports the TCP/IP address for the domain name server.

```
Send:         addr dns
Receive:      addr dns 192.168.1.1
```

**set addr dns** *address*
This command sets the dns *address*, where *address* consists of four numbers ranging from 0-255 inclusive, separated by ".".

```
Send:         set addr dns 192.168.1.1
Receive:      set addr dns 192.168.1.1 ok
```

---

**addr gw**
This command reports the default TCP/IP gateway address.

```
Send:         addr gw
Receive:      addr gw 192.168.1.1
```

**Note** This command cannot be used when DHCP is on. Refer to the DHCP command that follows for additional information. ▲

**set addr gw** *address*
This command sets the default gateway *address*, where *address* consists of four numbers ranging from 0-255 inclusive, separated by ".".

```
Send:         set addr gw 192.168.1.1
Receive:      set addr gw 192.168.1.1 ok
```

---

**addr ip**
This command reports the IP address of the analyzer.

```
Send:         addr ip
Receive:      addr ip 192.168.1.200
```

**Note** This command cannot be used when DHCP is on. Refer to the DHCP command that follows for additional information. ▲

**set addr ip** *address*
This command sets the analyzer's IP *address*, where *address* consists of four numbers ranging from 0-255 inclusive, separated by ".".

```
Send:         set addr ip 192.168.1.200
Receive:      set addr ip 192.168.1.200 ok
```

---

**addr nm**
This command reports the IP netmask.

```
Send:         addr nm
Receive:      addr nm 255.255.255.0
```

**Note** This command cannot be used when DHCP is on. Refer to the DHCP command that follows for additional information. ▲

**set addr nm** *address*
This command sets the nm *address*, where *address* consists of four numbers ranging from 0-255 inclusive, separated by ".".

```
Send:         set addr nm 255.255.255.0
Receive:      set addr nm 255.255.255.0 ok
```

---

**addr ntp**
This command reports the IP address for the NTP time server. See "Network Time Protocol Server" in the "Communications Settings" section of the "Operation" chapter for more information.

```
Send:         addr ntp
Receive:      addr ntp 192.168.1.2
```

**set addr ntp** *address*
This command sets the NTP time server *address*, where *address* consists of four numbers ranging from 0-255 inclusive, separated by ".".

```
Send:         set addr ntp 192.168.1.2
Receive:      set addr ntp 192.168.1.2 ok
```

---

**baud**
This command reports the current baud rate for the serial port (RS232/RS485). The example that follows reports that the current baud rate is 9600 baud.

```
Send:         baud
Receive:      baud 9600
```

**set baud** *rate*
*rate* = | 1200 | 2400 | 4800 | 9600 | 19200 | 38400 | 57600 | 115200 |
This command sets the instrument baud *rate*. The example that follows sets the instrument's baud rate to 9600.

**Note** After the command is sent, the baud rate of the sending device must be changed to agree with the instrument. ▲

```
Send:         set baud 9600
Receive:      set baud 9600 ok
```

**dhcp**

This command reports the current state of use of DHCP on or off. DHCP is used to assign an IP address to the analyzer automatically. The example that follows shows that DHCP is on.

```
Send:         dhcp
Receive:      dhcp on
```

**set dhcp** *onoff*

This command enables (*on*) and disables (*off*) the DHCP service. When DHCP is set to on, the instrument gets the IP address, the netmask address, and the gateway address from a DHCP server. When DHCP is set to off, the instrument gets these addresses from system memory.

**Note** When changing the IP address, the netmask address, or the gateway address, you must cycle power to the instrument before the change takes effect. Until you cycle power, the address assigned by the DHCP server will still be used and reported as the current address. ▲

```
Send:         set dhcp on
Receive:      set dhcp on ok
```

**format**

This command reports the current reply termination format. The example that follows shows that the reply format is 00, which means reply with no checksum, according to **Table B–9**.

```
Send:         format
Receive:      format 00
```

**set format** *format*

This command sets the reply termination *format*, where *format* is set according to **Table B–9**. The example that follows sets the reply termination format to checksum.

```
Send:         set format 01
Receive:      set format 01 ok
```

**Table B–9.** Reply Termination Formats

| *Format* | Reply Termination |
|---|---|
| 00 | <CR> |
| 01 | <NL> sum xxxx <CR> |

where xxxx = 4 hexadecimal digits that represent the sum of all the characters (bytes) in the message

---

**host name**
This command reports the host name string.

```
Send:         host name
Receive:      host name analyzer01
```

**set host name** *string*
This command sets the host name *string*, where *string* is 1-13 alphanumeric characters.

```
Send:         set host name analyzer01
Receive:      set host name analyzer01 ok
```

---

**instr name**
This command reports the instrument name.

```
Send:         instr name
Receive:      instr name
              SO4 Analyzer
              SO4 Analyzer
```

---

**instrument id**
This command reports the instrument id.

```
Send:         instrument id
Receive:      instrument id 7
```

**set instrument id** *value*
This command sets the instrument id to *value,* where *value* is a decimal number between 0 and 127 inclusive.

**Note** Sending this command via RS-232 or RS-485 will require the host to use the new id for subsequent commands. ▲

```
Send:         set instrument id 7
Receive:      set instrument id 7 ok
```

---

**mode**
This command reports what operating mode the instrument is in: local, service, or remote. The example that follows shows that the instrument is in the remote mode.

```
Send:         mode
Receive:      mode remote
```

**set mode local**
**set mode remote**
These commands set the instrument to local or remote mode. The example that follows sets the instrument to the local mode.

```
Send:         set mode local
Receive:      set mode local ok
```

---

**allow mode cmd**
This command reports the current allow mode setting: 1 = allow "set mode local" or "set mode remote" commands; 0 = ignore "set mode local" or "set mode remote" commands. Refer to **Table B–10**. The default value is 0; ignore the commands. The example that follows shows that the instrument is configured to ignore "set mode local" or "set mode remote" commands.

```
Send:         allow mode cmd
Receive:      allow mode cmd 0
```

**set allow mode cmd** *value*
This command is used to configure the instrument to *value,* where *value* is either 1 = accept or 0 = ignore the "set mode local" and "set mode remote" commands. Refer to **Table B–10**.

If the instrument is set to accept the commands (*value* = 1), the "set mode local" command will unlock the instrument and the keypad can be used to make changes via the front panel.

If the instrument is set to ignore the commands (*value* = 0), the instrument will respond with "ok" as if the command has been accepted and acted upon, **but will not change the instrument lock status** (this is for compatibility with systems expecting an "ok" response).

**Note** The instrument will always respond to the command "mode" with the status of the password lock as "mode local" or "mode remote" regardless of the above setting. ▲

The example that follows sets the instrument to accept the "set mode local" or "set mode remote" commands.

```
Send:         set allow mode cmd 1
Receive:      set allow mode cmd 1 ok
```

**Table B–10.** Allow Mode Command Values

| *Value* | Allow Mode Command |
|---|---|
| 0 | Ignore (default) |
| 1 | Accept |

**power up mode**

This command reports the current power up mode setting, where *value,* is either 0 = local/unlocked or 1 = remote/locked. The default value is 0; power up in local/unlocked mode. The example that follows shows that the instrument is configured to power up in the remote/locked mode.

```
Send:         power up mode
Receive:      power up mode 1
```

**set power up mode** *value*

This command is used to configure the instrument to power up in the local/unlocked mode (*value* = 0) or the remote/locked mode (*value* = 1).

If the instrument is set to power up in the local/unlocked mode, the keypad can be used to make changes via the front panel. If the instrument is set to power up in the remote/locked mode, changes can not be made from the front panel. The example that follows sets the instrument to power up in remote/locked mode.

```
Send:         set power up mode 1
Receive:      set power up mode 1 ok
```

**Table B–11.** Power Up Mode Command Values

| *Value* | Power Up Mode Command |
|---|---|
| 0 | Local/Unlocked (default) |
| 1 | Remote/Locked Mode |

**program no**

This command reports the analyzer's model information and program version number, which will be dependant on the current version.

```
Send:         program no
Receive:      program no iSeries 5020 01.01.10.003
```

**set layout ack**
This command disables the stale layout/layout change indicator (*) that is attached to each response if the erec layout has changed since the last time erec layout was requested. Refer to **Table B–12**.

The example that follows sets the instrument to.append the stale layout/layout change indicator (*).

```
Send:         set layout ack 1
Receive:      set layout ack 1 ok
```

**Table B–12.** Set Layout Ack Values

| *Value* | Function |
|---|---|
| 0 | Do nothing (default) |
| 1 | Append "*" |

**tz**
This command reports the "tz" timezone string for the NTP server. See "Network Time Protocol Server" in the "Communications Settings" section of the "Operation" chapter for more information.

```
Send:         tz
Receive:      tz EST+5EDT
```

**set tz** *string*
This command sets the timezone *string* for the instrument for use with the NTP time server, where *string* is a standard timezone string. Common strings are listed in the timezone screen description in the "Operation" chapter.

```
Send:         set tz EST+5EDT
Receive:      set tz EST+5EDT ok
```

## I/O Configuration

**analog iout range** *channel*
This command reports the analog current output range setting for *channels*, where *channel* must be between 1 and 6, inclusive. The example that follows reports current output channel 4 to the 4-20 mA range, according to **Table B–13**. This command responds with "feature not enabled" if the I/O expansion board is not detected.

```
Send:         analog iout range 4
Receive:      analog iout range 4 2
```

**set analog iout range** *channel range*
This command sets analog current output *channel* to the *channel range* where *channel* is between 1 and 6 inclusive, and *range* is set according to **Table B–13**. The example that follows sets current output channel 4 to the 0-20 mA range. This command responds with "feature not enabled" if the I/O expansion board is not detected.

```
Send:         set analog iout range 4 1
Receive:      set analog iout range 4 1 ok
```

**Table B–13.** Analog Current Output Range Values

| *Range* | **Output Range** |
|---|---|
| 1 | 0-20 mA |
| 2 | 4-20 mA |
| 0 [cannot be set to this, but may report] | Undefined |

**analog vin** *channel*
This command retrieves the analog voltage input *channel* data, both the calculated value and the actual voltage. In the example that follows, the "calculated" value of channel 1 is 75.325 °F, volts are 2.796. This command responds with "feature not enabled" if the I/O expansion board is not detected.

```
Send:         analog vin 1
Receive:      analog vin 1 75.325 2.796
```

**analog vout range** *channel*
This command reports the analog voltage output *channel* range, where *channel* is between 1 and 6 inclusive, according to Table B-11.

```
Send:         analog vout range 2
Receive:      analog vout range 2 3
```

**set analog vout range** *channel range*
This command sets analog voltage output *channel* to the range, where *channel* is between 1 and 6 inclusive, and *range* is set according to **Table B–14**. The example that follows sets channel 2 to the 0-10 V range.

```
Send:         set analog vout range 2 3
Receive:      set analog vout range 2 3 ok
```

**Table B–14.** Analog Voltage Output Range Values

| *Range* | **Output Range** |
|---|---|
| 1 | 0-1 V |
| 2 | 0-100 mV |
| 3 | 0-10 V |
| 4 | 0-5 V |
| 0 [cannot be set to this, but may report] | Undefined |

**dig in**

This command reports the status of the digital inputs as a 4-digit hexadecimal string with the most significant bit (MSB) being input 16.

```
Send:         dig in
Receive:      dig in 0xff7f
```

**din** *channel*

This command reports the action assigned to input *channel* and the corresponding active state. The example that follows reports the input 1 to be assigned an index number 3 corresponding to action of $SO_2$ mode with the active state being high.

```
Send:         din 1
Receive:      din 1 3 SO2 MODE high
```

**set din** *channel index state*

This command assigns digital input *channel* (1-16) to activate the action indicated by *index* (1-35), when the input transitions to the designated *state* (high or low). Use “list din var” command to obtain the list of supported *index* values and corresponding actions.

```
Send:         set din 5 9 high
Receive:      set din 1 9 high ok
```

**dout** *channel*

This command reports the index number and output variable and the active state assigned to output *channel.* The example that follows reports the input 4 to be assigned an index number 11 corresponding to general alarm with the active state being open.

```
Send:         dout 4
Receive:      dout 4 11 GEN ALARM open
```

**set dout** *channel index state*
This command assigns digital output *channel* to be assigned to the action associated with *index*, and assigns it an active state of *state* (open or closed).

```
Send:         set dout 4 11 open
Receive:      set dout 4 11 open ok
```

**dtoa** *channel*
This reports the outputs of the 6 or 12 Digital to Analog converters, according to **Table B–15**. The example that follows shows that the D/A #1 is 97.7% full-scale.

```
Send:         dtoa 1
Receive:      dtoa 1 97.7%
```

**Note** All channel ranges are user definable. If any customization has been made to the analog output configuration, the default selections may not apply. ▲

**Table B–15.** Default Output Assignment

| D to A | Function | Single Range |
|---|---|---|
| 1 | Voltage Output | Cont $SO_2$ |
| 2 | Voltage Output | Cont $SO_4$ |
| 3 | Voltage Output | Batch $SO_4$ |
| 4 | Voltage Output | ? |
| 5 | Voltage Output | ? |
| 6 | Voltage Output | Not Assigned |
| 7 | Current Output | Cont $SO_2$ |
| 8 | Current Output | Cont $SO_4$ |
| 9 | Current Output | Batch $SO_4$ |
| 10 | Current Output | ? |
| 11 | Current Output | ? |
| 12 | Current Output | Not Assigned |

**list var aout**
**list var dout**
**list var din**

These commands report the list of index numbers, and the variables (associated with that index number) available for selection in the current mode (determined by single/dual/auto, gas mode) for analog output, digital output and digital inputs. The index number is used to insert the variable in a field location in a list using "set sp *field index*". The example that follows reports the list of analog output, index numbers, and variables.

```
Send:         list var aout
Receive:      list var aout
index variable  0 none
                1 so2
                2 so4c
                3 so4b
                4 f0avg
                5 f0sd
                6 f0pts
                7 f1avg
                8 f1sd
                9 f1pts
               10 savg
               11 ssd
               12 spts
               13 fbkg
               14 intt
               15 rctt
               16 cnvtp
               17 cnvbt
               20 pres
               21 smplfl
               22 pmtv
               23 lmpv
               24 lmpi
               25 ain1
               26 ain2
               27 ain3
               28 ain4
               29 ain5
               30 ain6
               31 ain7
               32 ain8
               33 cnvfl
               34 amtmp
               35 ambpr
```

**relay stat**
This command reports the current relay logic normally "open" or normally "closed," if all the relays are set to same state, that is all open or all closed. The example that follows shows that the status when all the relays logic is set to normally "open".

```
Send:         relay stat
Receive:      relay stat open
```

**Note** If individual relays have been assigned different logic then the response would be a 4-digit hexadecimal string with the least significant byte (LSB) being relay no 1. ▲

For example:

```
Receive:      relay stat 0x0001 (indicates relay no 1 is set to
              normally open logic, all others are normally closed)
Receive:      relay stat 0x0005 (indicates relay no 1 and 3 are
              set to be  normally open logic, all others are normally
               closed)
```

**set relay open**
**set relay open** *value*
**set relay closed**
**set relay closed** *value*
These commands set the relay logic to normally open or closed for relay number *value*, where *value* is the relay between 1 and 16. The example that follows sets the relay no 1 logic to normally open.

**Note** If the command is sent without an appended relay number then all the relays are assigned the set logic of normally open/closed. ▲

```
Send:         set relay open 1
Receive:      set relay open 1 ok
```

## Record Layout Definition

The Erec, Lrec Srec  layouts contain the following:

- A format specifier for parsing ASCII responses
- A format specifier for parsing binary responses

In addition to these the Erec Layout contains:

- A format specifier for producing the front-panel displays.

In operation, values are read in using either the ASCII or binary format specifiers and converted to uniform internal representations (32-bit floats or 32-bit integers). These values are converted into text for display on the screen using the format specifier for the front-panel display. Normally, the specifier used to parse a particular datum from the input stream will be strongly related to the specifier used to display it (e.g., all of the floating point inputs will be displayed with an 'f' output specifier, and all of the integer inputs will be displayed with a 'd' specifier).

## Format Specifier for ASCII Responses

The first line of the Layout response is the scanf-like parameter list for parsing the fields from an ASCII ERec response. Parameters are separated by spaces and the line is terminated by a \n (the normal line separator character). Valid fields are:

```
%s  - parse a string
%d  - parse a decimal number
%ld - parse a long (32-bit) decimal number
%f  - parse a floating point number
%x  - parse a hexadecimal number
%lx - parse a long (32-bit) hex number
%*  - ignore the field
```

**Note** Signed versus unsigned for the integer values does not matter; it is handled automatically. ▲

## Format Specifier for Binary Responses

The second line of the Layout response is the binary parameter list for parsing the fields from a binary response. Parameters MUST be separated by spaces, and the line is terminated by a '\n'. Valid fields are:

```
t - parse a time specifier (2 bytes)
D - parse a date specifier (3 bytes)
i - ignore one 8-bit character (1 byte)
e - parse a 24-bit floating point number (3 bytes: n/x)
E - parse a 24-bit floating point number (3 bytes: N/x)
f - parse a 32-bit floating point number (4 bytes)

c - parse an 8-bit   signed number (1 byte)
C - parse an 8-bit unsigned number (1 byte)
n - parse a 16-bit   signed number (2 bytes)
N - parse a 16-bit unsigned number (2 bytes)
m - parse a 24-bit   signed number (3 bytes)
M - parse a 24-bit unsigned number (3 bytes)
l - parse a 32-bit   signed number (4 bytes)
L - parse a 32-bit unsigned number (4 bytes)
```

There is an optional single digit *d* which may follow any of the numeric fields which indicates that after the field has been parsed out, the resulting

value is to be divided by 10^*d*. Thus the 16-bit field 0xFFC6 would be interpreted with the format specifier 'n3' as the number -0.058.

## Format Specifier for Front-Panel Layout

The subsequent lines in the ERec Layout response describe the appearance of the full panel. The full instrument panel as it appears on the screen has two columns of lines. Each line is composed of three major components: (1) a text field, (2) a value field, and (3) a button. None of these three components is required. The text field contains statically displayed text.

The value field displays values which are parsed out of the response to a DATA/ERec command. It also displays, though background changes, alarm status. The button, when pressed, triggers input from either a dialog box or a selection list. There are five kinds of buttons, B, I, L, T, and N.

Each line in the layout string corresponds to one line on the display. The layout string describes each of the three major fields as well as translation mechanisms and corresponding commands.

### Text

The first field in the layout string is the text. It is delimited by a ':'. The string up to the first ':' will be read and inserted in the text field of the line.

### Value String

This is followed by a possible string, enclosed in quotes. This is used to place a string into the value field.

### Value Source

The value source, which is the item (or word) number in the DATA/ERec response, appears next. This is followed by an optional bitfield designator. The datum identified by the value source can be printed as a string 's', hexadecimal 'x', decimal 'd', or floating point 'f', or binary 'b' number. Typically, bitfield extractions are only done for decimal or hexadecimal numbers.

Floating-point numbers can be followed with an optional precision specifier which will be used as an argument to printf's %f format (e.g., a field of '4' would be translated into the printf command of '%.3f'). Alternately, the special character '*' can precede the precision specifier; this causes an indirection on the precision specifier (which now becomes a field number).

This is useful when formatting, for example, numbers which have varying precision depending on the mode of the instrument.

Binary numbers can also have an optional precision specifier which is used to determine how many bits to print. For example, the specifier 'b4' will print the lowest four bits of the parsed number.

There are serious restrictions on where an 's' field may appear: currently sources 1 and 2 must be 's', and no others may be 's'.

### Alarm Information

The value source is followed by optional alarm information, indicated by a commercial at sign '@' with a source indicator and a starting bit indicator. All alarm information is presumed to be two bits long (low and high). The bitfield extraction is performed on the integer part of the source. Typical alarm information would appear as '@6.4'.

### Translation Table

Then, there appears an optional translation table within braces '{}'. This is a string of words separated by spaces. An example translation table would be '{Code_0 Code_1 Code_2 Code_3}'. The value, once extracted is used as a zero-based index into the translation table to determine the string to display.

### Selection Table

Then there appears an optional selection table within parentheses '(...)'. This is a string of numbers separated by spaces '(0 1)'. The selection table lists the translation table entries which the user may select from when setting the parameter. This is not necessarily the same as the entries which may be displayed.

### Button Designator

Then there appears an optional button designator. This will be one of 'B', 'I', 'L', 'T', or 'N'.

B- Indicates a button which pops up an input dialog prompting the user for a new value using the designated input format. The input format is specified from the 'B' through the subsequent semicolon.

I—Indicates a button which pops up a selection list with input translation. That is, the values read are translated before they are compared to the selection list options.

L—Indicates a button which pops up a selection list without any translation. The output value is number of the selected option.

T—Indicates a button which pops up a selection list with output translation. The number of the option selected is used as an index into the translation table to generate an output string.

N—Indicates a button which only sends the subsequent command to the instrument. No user-prompting happens.

## Examples

Some examples ('\n' is the C syntax for an end-of-line character):

```
'Concentrations\n'
```

This is a single text-only line.

```
'\n'
```

This is a single blank line.

```
' NO:3s\n'
```

This is a line which appears slightly indented. The text field is 'NO', the value is taken from the third element of the data response, and interpreted as a string.

```
' NO:18sBd.ddd;set no coef %s\n'
```

This is a line which also appears slightly indented. The next field is also 'NO', but the value is taken from the eighteenth element of the data response, again interpreted as a string. A button appears on this line which, when pressed, pops up an input dialog which will state "Please enter a new value for NO using a d.ddd format." The string entered by the user is used to construct the output command. If the user enters, for example, '1.234', the constructed command will be 'set no coef 1.234'.

```
' NO:21f{Code_0 Code_1 Code_2 Code_3 Code_4 Code_5 Code_6 Code_7
Code_8 Code_9 Code_10 Code_11}Lset range no %d\n'
```

This is a line which appears slightly indented, the title is again 'NO', and the value the twenty-first element of the data response, interpreted as a floating-point number. There is a no-translation button which creates a selection list of twelve "Code nn" options. The number of the user selection is used to create the output command.

```
'Mode:6.12-13x{local remote service service}(0 1)Tset mode %s\n'
```

This is a line which has a title of 'Mode', and value taken from the sixth field of the data response. There is a bitfield extraction of bits 12 through 13 from the source (the value type is not important here because the value is being translated to an output string). Once the bits have been extracted, they are shifted down to the bit-zero position. Thus, the possible values of this example will be 0 through 3. The translation list shows the words which correspond to each input value, the zeroth value appearing first (0 -> local, 1 -> remote, etc.). The selection list shows that only the first two values, in this case, are to be shown to the user when the button is pressed. The 'T' button indicates full translation, input code to string, and user selection number to output string.

```
'\xC'
```

This is a line that starts a new column (the \xC or ^L),

```
' Comp:6.11x{off on}Tset temp comp %s\n'
```

This shows that the bitfield end (the second part of a bitfield specification) is optional. The bitfield will be one bit long, starting in this case at the eleventh bit.

```
'Background:7f*8Bd.ddd;set o3 bkg %s\n'
```

This shows the use of indirect precision specifiers for floating point displays. The background value is taken from the 7th element, and the precision specifier is taken from the 8th. If the asterisk were not present, it would indicate instead that 8 digits after the decimal point should be displayed.

# Appendix C
# MODBUS Protocol

This appendix provides a description of the MODBUS Protocol Interface and is supported both over RS-232/485 (RTU protocol) as well as TCP/IP over Ethernet.

The MODBUS Commands that are implemented are explained in detail in this document. The MODBUS protocol support for the iSeries enables the user to perform the functions of reading the various concentrations and other analog values or variables, read the status of the digital outputs of the analyzer, and to trigger or simulate the activation of a digital input to the instrument. This is achieved by using the supported MODBUS commands listed below.

For details of the Model 5020*i* MODBUS Protocol specification, see the following topics:


- "Serial Communication Parameters" on page C-2
- "TCP Communication Parameters" on page C-2
- "Application Data Unit Definition" on page C-2
- "Function Codes" on page C-3
- "MODBUS Addresses Supported" on page C-9


Additional information on the MODBUS protocol can be obtained at http://www.modbus.org. References are from MODBUS Application Protocol Specification V1.1a MODBUS-IDA June 4, 2004.

## Serial Communication Parameters

The following are the communication parameters that are used to configure the serial port of the *i*Series to support MODBUS RTU protocol.

| | |
|---|---|
| Number of Data bits | : 7 or 8 |
| Number of Stop bits | : 1or 2 |
| Parity | : None, Odd, or Even |
| Data rate | : 1200-115200 Baud (9600 is default) |

## TCP Communication Parameters

*i*Series instruments support the MODBUS/TCP protocol. The register definition is the same as for the serial interface. Up to three simultaneous connections are supported over Ethernet.

TCP connection port for MODBUS: 502

## Application Data Unit Definition

Here are the MODBUS ADU (Application Data Unit) formats over serial and TCP/IP:

| | | | | |
|---|---|---|---|---|
| Serial: | Slave Address | Function Code | Data | Error Check |
| TCP/IP: | MBAP Header | Function Code | Data | |

### Slave Address

The MODBUS slave address is a single byte in length. This is the same as the instrument ID used for C-Link commands and can be between 1 and 127 decimal (i.e. 0x01 hex to 0x7F hex). This address is only used for MODBUS RTU over serial connections.

**Note** Device ID ‘0’ used for broadcast MODBUS commands, is not supported. Device IDs 128 through 247 (i.e. 0x80 hex to 0xF7 hex) are not supported because of limitations imposed by C-Link. ▲

### MBAP Header

In MODBUS over TCP/IP, a MODBUS Application Protocol Header (MBAP) is used to identify the message. This header consists of the following components:

| | | |
|---|---|---|
| Transaction Identifier | 2 Bytes | 0x0000 to 0xFFFF (Passed back in response) |
| Protocol Identifier | 2 Bytes | 0x00 (MODBUS protocol) |
| Length | 2 Bytes | 0x0000 to 0xFFFF (Number of following bytes) |
| Unit Identifier | 1 Byte | 0x00 to 0xFF (Passed back in response) |

A Slave address is not required in MODBUS over TCP/IP because the higher-level protocols include device addressing. The unit identifier is not used by the instrument.

### Function Code

The function code is a single byte in length. The following function codes are supported by the instrument:

| | | |
|---|---|---|
| Read Coils | : | 0x01 |
| Read Inputs | : | 0x02 |
| Read Holding Registers | : | 0x03 |
| Read Input Registers | : | 0x04 |
| Force (Write) Single Coil | : | 0x05 |
| Read Exception Status | : | 0x07 |

If a function code is received that is not in this list, and invalid function exception is returned.

### Data

The data field varies depending on the function. For more description of these data fields, see “Function Codes” below.

### Error Check

In MODBUS over Serial an error check is included in the message. This is not necessary in MODBUS over TCP/IP because the higher-level protocols ensure error-free transmission. The error check is a two-byte (16-bit) CRC value.

## Function Codes

This section describes the various function codes that are supported by the Model 5020*i*.

### (0x01/0x02) Read Coils / Read Inputs

Read Coils/Inputs reads the status of the digital outputs (relays) in the instrument. Issuing either of these function codes will generate the same response.

These requests specify the starting address, i.e. the address of the first output specified, and the number of outputs. The outputs are addressed starting at zero. Therefore, outputs numbered 1–16 are addressed as 0–15.

The outputs in the response message are packed as one per bit of the data field. Status is indicated as 1 = Active (on) and 0 = Inactive (off). The LSB of the first data byte contains the output addressed in the query. The other outputs follow toward the high order end of this byte, and from low order

to high order in subsequent bytes. If the returned output quantity is not a multiple of eight, the remaining bits in the final data byte will be padded with zeros (toward the high order end of the byte). The Byte Count field specifies the quantity of complete bytes of data.

**Note** The values reported may not reflect the state of the actual relays in the instrument, as the user may program these outputs for either active closed or open. ▲

**Request**

| | | |
|---|---|---|
| Function code | 1 Byte | 0x01 or 0x02 |
| Starting Address | 2 Bytes | 0x0000 to maximum allowed by instrument |
| Quantity of outputs | 2 Bytes | 1 to maximum allowed by instrument |
| Unit Identifier | 1 Byte | 0x00 to 0xFF (Passed back in response) |

**Response**

| | | |
|---|---|---|
| Function code | 1 Byte | 0x01 or 0x02 |
| Byte count | 1 Byte | N* |
| Output Status | n Byte | N = N or N+1 |

*N = Quantity of Outputs / 8, if the remainder not equal to zero, then N=N+1

**Error Response**

| | | |
|---|---|---|
| Function code | 1 Byte | 0x01 or 0x02 |
| Exception code | 1 Byte | 01=Illegal Function, 02=Illegal Address, 03=Illegal Data, 04=Slave Device Failure |

Here is an example of a request and response to read outputs 2–15:

**Request**

| *Field Name* | *(Hex)* |
|---|---|
| Function | 0x01 |
| Starting Address Hi | 0x00 |
| Starting Address Lo | 0x02 |
| Quantity of Outputs Hi | 0x00 |
| Quantity of Outputs Lo | 0x0D |

**Response**

| *Field Name* | *(Hex)* |
|---|---|
| Function | 0x01 |
| Byte Count | 0x03 |
| Output Status 2–10 | 0xCD |
| Output Status 11–15 | 0x0A |

The status of outputs 2–10 is shown as the byte value 0xCD, or binary 1100 1101. Output 10 is the MSB of this byte, and output 2 is the LSB. By convention, bits within a byte are shown with the MSB to the left, and the LSB to the right. Thus the outputs in the first byte are '10 through 2', from left to right. In the last data byte, the status of outputs 15-11 is shown as the byte value 0x0A, or binary 0000 1010. Output 15 is in the fifth bit position from the left, and output 11 is the LSB of this byte. The four remaining high order bits are zero filled.

## (0x03/0x04) Read Holding Registers / Read Input Registers

Read holding/input registers reads the measurement data from the instrument. Issuing either of these function codes will generate the same response. These functions read the contents of one or more contiguous registers.

These registers are 16 bits each and are organized as shown below. All of the values are reported as 32-bit IEEE standard 754 floating point format. This uses 2 sequential registers, least significant 16 bits first.

The request specifies the starting register address and the number of registers. Registers are addressed starting at zero. Therefore registers numbered 1–16 are addressed as 0–15. The register data in the response message are packed as two bytes per register, with the binary contents right justified within each byte. For each register, the first byte contains the high order bits and the second contains the low order bits.

The status of outputs 2–10 is shown as the byte value 0xCD, or binary 1100 1101. Output 10 is the MSB of this byte, and output 2 is the LSB. By convention, bits within a byte are shown with the MSB to the left, and the LSB to the right. Thus, the outputs in the first byte are '10 through 2', from left to right. In the last data byte, the status of outputs 15-11 is shown as the byte value 0x0A, or binary 0000 1010. Output 15 is in the fifth bit position from the left, and output 11 is the LSB of this byte. The four remaining high order bits are zero filled.

## (0x03/0x04) Read Holding Registers / Read Input Registers

Read holding / input registers reads the measurement data from the instrument. Issuing either of these function codes will generate the same response. These functions read the contents of one or more contiguous registers.

These registers are 16 bits each and are organized as shown below. All of the values are reported as 32-bit IEEE standard 754 floating point format. This uses 2 sequential registers, least significant 16 bits first.

The request specifies the starting register address and the number of registers. Registers are addressed starting at zero. Therefore, registers numbered 1–16 are addressed as 0–15. The register data in the response message are packed as two bytes per register, with the binary contents right justified within each byte. For each register, the first byte contains the high order bits and the second contains the low order bits.

**Request**

| | | |
|---|---|---|
| Function code | 1 Byte | 0x03 or 0x04 |
| Starting Address | 2 Bytes | 0x0000 to maximum allowed by instrument |
| Quantity of Registers | 2 Bytes | 1 to maximum allowed by instrument |

**Response**

| | | |
|---|---|---|
| Function code | 1 Byte | 0x03 or 0x04 |
| Byte count | 1 Byte | 2 x N* |
| Register value | N* x 2 Bytes | N = N or N+1 |

*N = Quantity of Registers

**Error Response**

| | | |
|---|---|---|
| Function code | 1 Byte | Function code + 0x80 |
| Exception code | 1 Byte | 01=Illegal Function, 02=Illegal Address, 03=Illegal Data, 04=Slave Device Failure |

Here is an example of a request and response to read registers 10–13:

**Request**

| *Field Name* | *(Hex)* |
|---|---|
| Function | 0x03 |
| Starting Address Hi | 0x00 |
| Starting Address Lo | 0x09 |

| | |
|---|---|
| No. of Registers Hi | 0x00 |
| No. of Registers Lo | 0x04 |

**Response**

| *Field Name* | *(Hex)* |
|---|---|
| Function | 0x03 |
| Byte Count | 0x06 |
| Register value Hi (10) | 0x02 |
| Register value Lo (10) | 0x2B |
| Register value Hi (11) | 0x00 |
| Register value Lo (11) | 0x00 |
| Register value Hi (12) | 0x00 |
| Register value Lo (12) | 0x64 |
| Register value Hi (13) | 0x00 |
| Register value Lo (13) | 0x64 |

The contents of register 10 are shown as the two byte values of 0x02 0x2B. Then contents of registers 11–13 are 0x00 0x00, 0x00 0x64 and 0x00 0x64 respectively.

## (0x05) Force (Write) Single Coil

The force (write) single coil function simulates the activation of the digital inputs in the instrument, which triggers the respective action.

This function code is used to set a single action to either ON or OFF. The request specifies the address of the action to be forced. Actions are addressed starting at zero. Therefore, action number 1 is addressed as 0. The requested ON/OFF state is specified by a constant in the request data field. A value of 0xFF00 requests the action to be ON. A value of 0x0000 requests it to be OFF. All other values are illegal and will not affect the output. The normal response is an echo of the request, returned after the state has been written.

**Note** This function will not work if the instrument is in service mode. ▲

**Request**

| | | |
|---|---|---|
| Function code | 1 Byte | 0x05 |
| Starting Address | 2 Bytes | 0x0000 to maximum allowed by instrument |
| Output Value | 2 Bytes | 0x0000 or 0xFF00 |

**Response**

| | | |
|---|---|---|
| Function code | 1 Byte | 0x05 |
| Starting Address | 2 Bytes | 0x0000 to maximum allowed by instrument |
| Output Value | 2 Bytes | 0x0000 or 0xFF00 |

**Error Response**

| | | |
|---|---|---|
| Function code | 1 Byte | Function code + 0x80 |
| Exception code | 1 Byte | 01=Illegal Function, 02=Illegal Address, 03=Illegal Data, 04=Slave Device Failure |

Here is an example of a request to write Coil 5 ON:

**Request**

| *Field Name* | *(Hex)* |
|---|---|
| Function | 05 |
| Output Address Hi | 00 |
| Output Address Lo | 05 |
| Output Value Hi | FF |
| Output Value Lo | 00 |

**Response**

| *Field Name* | *(Hex)* |
|---|---|
| Function | 05 |
| Output Address Hi | 00 |
| Output Address Lo | 05 |
| Output Value Hi | FF |
| Output Value Lo | 00 |

## MODBUS Addresses Supported

Tables C1 through C3 list the MODBUS addresses supported for the Model 5020*i*.

**IMPORTANT NOTE** The addresses in the following tables are Protocol Data Unit (PDU) addresses. Verify the coil number on your MODBUS master to ensure that it matches the coil number on the instrument. ▲

**Note** Coil status 1 indicates active state. ▲

**Table C–1.** Read Coils for Model 5020*i*

| Coil Number | Status |
|---|---|
| 0 | Invalid |
| 1 | SERVICE |
| 2 | ZERO MODE |
| 3 | SPAN MODE |
| 4 | SAMPLE MODE |
| 5 | FILTER MODE |
| 6 | PURGE MODE |
| 7 | GEN ALARM |
| 8 | SO4 CONC ALARM (MAX) |
| 9 | SO4 CONC ALARM (MAX) |
| 10 | INT TEMP ALARM |
| 11 | CHAMB TEMP ALARM |
| 12 | CONV TEMP ALARM |
| 13 | CONV TEMP DIFF ALARM |
| 14 | PGAS TEMP ALARM |
| 15 | AMB TEMP ALARM |
| 16 | AMB PRESSURE ALARM |
| 17 | CHAMB PRESSURE ALARM |
| 20 | SAMPLE FLOW ALARM |
| 21 | CONVERTER FLOW ALARM |
| 22 | FLASH REF ALARM |
| 23 | FLASH VOLTAGE ALARM |
| 24 | AUTO TIMING ALARM |

| Coil Number | Status |
|---|---|
| 25 | DATA WARNING ALARM |
| 26 | ZERO CHK/CAL ALARM |
| 27 | SPAN CHK/CAL ALARM |
| 28 | MB STATUS ALARM |
| 29 | MIB STATUS ALARM |
| 30 | I/OBD STATUS ALARM |
| 31 | EXT CONV BD STATUS ALARM |

**IMPORTANT NOTE** The addresses in the following tables are Protocol Data Unit (PDU) addresses. Verify the register number on your MODBUS master to ensure that it matches the register number on the instrument. ▲

**Note** For additional information on how to read registers and interpret the data, refer to the "(0x03/0x04) Read Holding Registers / Read Input Registers" section in this appendix. ▲

**Table C–2.** Read Registers for 5020i

| Register Number | Variable |
|---|---|
| 0 | Invalid |
| 1&2 | CONTINUOUS SO2 |
| 3&4 | CONTINUOUS SO4 |
| 5&6 | BATCH SO4 |
| 7&8 | F0 AVERAGE |
| 9&10 | F0 STD DEV |
| 11&12 | F0 POINTS |
| 13&14 | F1 AVERAGE |
| 15&16 | F1 STD DEV |
| 17&18 | F1 POINTS |
| 19&20 | SMP AVERAGE |
| 21&22 | SMP STD DEV |
| 23&24 | SMP POINTS |
| 25&26 | FILTER BKG |
| 27&28 | INT TEMP |
| 29&30 | CHAMBER TEMP |

| Register Number | Variable |
|---|---|
| 31&32 | CNV TEMP TOP |
| 33&34 | CNV TEMP BTM |
| 35&36 | PERM OVEN GAS |
| 37&38 | PERM OVEN HTR |
| 39&40 | CHAMBER PRESSURE |
| 41&42 | SAMPLE FLOW |
| 43&44 | PMT VOLTS |
| 45&46 | FLASH VOLTS |
| 47&48 | FLASH REF |
| 49&50 | ANALOG IN 1 (I/O Expansion Board installed) |
| 51&52 | ANALOG IN 2 (I/O Expansion Board installed) |
| 53&54 | ANALOG IN 3 (I/O Expansion Board installed) |
| 55&56 | ANALOG IN 4 (I/O Expansion Board installed) |
| 57&58 | ANALOG IN 5 (I/O Expansion Board installed) |
| 59&60 | ANALOG IN 6 (I/O Expansion Board installed) |
| 61&62 | ANALOG IN 7 (I/O Expansion Board installed) |
| 63&64 | ANALOG IN 8 (I/O Expansion Board installed) |
| 65&66 | CONV FLOW |
| 67&68 | AMBIENT TEMP |
| 69&70 | AMBIENT PRES |

**IMPORTANT NOTE** The addresses in the following tables are Protocol Data Unit (PDU) addresses. Verify the coil number on your MODBUS master to ensure that it matches the coil number on the instrument. ▲

**Note** Writing 1 to the coil number shown in the following table will initiate the "action triggered" listed in the table. This state must be held for at least 1 second to ensure the instrument detects the change and triggers the appropriate action. ▲

**Note** The coils within each coil group in the following table are mutually exclusive and will not be triggered if there is a conflict. Before you assert (1) one coil in a group, make sure the other coils in the group are de-asserted (0). ▲

**Table C–3.** Write Coils for 5020*i*

| Coil Number | Action Triggered |
|---|---|
| 100 | Invalid |
| 101 | ZERO MODE |
| 102 | SPAN MODE |
| 103 | SAMPLE MODE |
| 104 | FILTER MODE |
| 105 | SET BACKGROUND |
| 106 | CAL TO SPAN |
| 107 | AOUTS TO ZERO |
| 108 | AOUTS TO FS |

# Appendix D
# Geysitech (Bayern-Hessen) Protocol

This appendix provides a description of the Geysitech (Bayern-Hessen or BH) Protocol Interface and is supported both over RS-232/485 as well as TCP/IP over Ethernet.

The Geysitech Commands that are implemented are explained in detail in this document. The Geysitech protocol support for the *i*Series enables the user to perform the functions of reading the various concentrations and to trigger the instrument to be in sample/zero/span mode if valid for that instrument. This is achieved by using the supported Geysitech commands listed below.

For details of the Model 5020*i* Geysitech Protocol specification, see the following topics:


- "Serial Communication Parameters" on page D-1
- "TCP Communication Parameters" on page D-2
- "Instrument Address" on page D-2
- "Abbreviations Used" on page D-2
- "Basic Command Structure" on page D-2
- "Block Checksum" on page D-3
- "Geysitech Commands" on page D-3


## Serial Communication Parameters

The following are the communication parameters that are used to configure the serial port of the *i*Series to support Geysitech protocol.

| | |
|---|---|
| Number of Data bits | : 7or 8 |
| Number of Stop bits | : 1 or 2 |
| Parity | : None, Odd, or Even |
| Data rate | : 1200 to 115200 Baud (9600 is default) |

## TCP Communication Parameters

*i*Series Instruments support the Geysitech/TCP protocol over TCP/IP. The register definition is the same as for the serial interface. Up to three simultaneous connections are supported over Ethernet.

TCP connection port for Geysitech: 9882

## Instrument Address

The Geysitech instrument address has a value between 0 and 127 and is represented by 3 digit ASCII number with leading zeros or leading spaces if required (e.g. Instrument address of 1 is represented as 001 or <SP><SP>1)

The instrument Address is the same as the Instrument ID used for C-Link and MODBUS commands. This can be set via the front panel.

The Instrument Address is represented by <address> in the examples throughout this document.

**Note** Device IDs 128 through 247 are not supported because of limitations imposed by the C-Link protocol. ▲

## Abbreviations Used

The following is a list of abbreviations used in this document:

<CR> is abbreviation for Carriage Return (ASCII code 0x0D)

<STX> is abbreviation for Start of Text (ASCII code 0x02)

<ETX> is abbreviation for End of Text (ASCII code 0x03)

<SP> is abbreviation for space (ASCII code 0x20)

## Basic Command Structure

The following is the basic structure of a Geysitech command:

<STX>Command text<ETX><BCC>

OR

<STX>Command text<CR>

Each Command is framed by control characters, <STX> at the start and terminated with either <ETX> or <CR>.

If a command is terminated with <ETX> then additional two characters <BCC> is attached after <ETX>, this is the block checksum.

Block Check Characters <BCC> may be added to the command to prevent processing invalid commands.

## Block Checksum Characters <BCC>

The block checksum characters are calculated beginning with a seed value of 00000000, binary (0x00), and bitwise exclusive ORing with each of the characters of the command string (or response) including the framing characters <STX> and <ETX>. The checksum works as an error check. The command terminator determines the presence or absence of <BCC>.

If a command is terminated by <ETX> then the next two characters are the checksum, if the command is terminated with <CR> no checksum is attached

The block checksum is represented by two characters, which represent a 2 digit hex number (1byte). (e.g. 1 byte 0xAB hex checksum will be represented by the two characters 'A' & 'B')

The checksum is referred to as <BCC> throughout this document.

## Geysitech Commands

The following commands are supported by the Geysitech protocol:

- Instrument Control Command (ST)
- Data Sampling/Data Query Command (DA)

### Instrument Control Command (ST)

There are three control commands supported by the Geysitech protocol.

This <control command> is a single letter, which triggers an action in the instrument. These commands are active only when service mode is inactive and the zero/span option is present.

Command 'N' switches the instrument gas mode to Zero mode.

Command 'K' switches the instrument gas mode to Span mode.

Command 'M' switches the instrument gas mode to Sample mode.

The following are the different acceptable formats of the ST command:

<STX>ST<address><control command><ETX><BCC>

OR

<STX>ST<address><control command><CR>

OR

<STX>ST<address><SP><control command><CR>

OR

<STX>ST<address><SP><control command><ETX><BCC>

The <address> is optional, which means it can be left out completely. The <address> if present must match the Instrument Address. Additional space can be present after the <address>.

If the received command does not satisfy the above formats or if the <address> does not match the Instrument Address the command is ignored.

This is a sample command to switch the instrument to zero mode, instrument id 5:

<STX>ST005<SP>N<CR>

## Data Sampling/Data Query Command (DA)

This command DA initiates a data transfer from the instrument. The instrument responds with measurement data, which depends on the range mode and is listed in "Measurements reported in response to DA command" below.

The command structure for a data query command is as follows:

<STX>DA<address><ETX><BCC>

The <address> is optional, which means it can be left out completely. The <address> if present must match the Instrument Address. Additional space can be present after the <address>.

If the <address> is left out then no space is allowed in the query string.

A command with no address is also a valid command.

The following are the different acceptable formats of the DA command with Instrument Address 5:

<STX>DA<CR>

<STX>DA005<CR>

<STX>DA<SP><SP>5<ETX><BCC>

<STX>DA<ETX><BCC>

The data query string is valid and will be answered with data transmission only if the command starts with <STX> which is followed by the characters DA, and the <address> (if present) matches the Instrument Address, and the command is terminated with either <CR> with no checksum or <ETX> followed by the correct checksum <BCC>.

**Sample Data Reply String in response to Data Query Command (DA):**

In response to a valid data query command (DA) the instrument responds in the following format:

<STX>MD02<SP><address><SP><measured value1><SP><status><SP><SFKT><SP><address+1><SP><measured value2><SP ><status><SP><SFKT><ETX><BCC>

The response uses the same command terminators as used by the received command i.e. if the received command was terminated with a <CR> the response is terminated with <CR> and if the command was terminated with a <ETX><BCC> the response is terminated with<ETX> and the computed checksum <BCC>.

The 02 after the MD indicates, that two measurements are present in the reply string, (a 03 for three measurements and so on, this will also determine the length of the reply string).

<address> is the Instrument Address. Each subsequent measurement attached to the response will have the <address + X> where X keeps incrementing by 1 for each measurement included.

<measured value> is the concentration value in currently selected gas units represented as exponential representation with 4 characters mantissa and 2 characters exponent, each with sign.

Mantissa: sign and 4 digits. The decimal point is assumed to be after the first digit and is not transmitted.

Exponent: sign and 2 digits.

**Example:**

-5384000.0 is represented as -5384+06

+0.04567 is represented as +4567-02

<status>: is formed by < operating status > and < error status > and separated by a space i.e.

<operating status><SP><error status>

Each of the two (<operating status> and <error status>) are formed by two characters each representing a 2 digit hex number which is one byte (8 Bits) operation status and one byte (8 Bits) error status.

These two bytes contain the information about the main operating conditions of the instrument at that instant. For details on how to interpret the status bytes refer to Table D–1 and Table D–2 below.

<SFKT>: is the space provided for future use for special function, it currently contains a string of ten 0's i.e. <0000000000>.

**Example:**

Geysitech Protocol with transmission of three concentrations (Instrument ID is 1, Operation Status is 03, Error Status is 04):

Data Query String: `<STX>DA<CR>`

Reply String:

```
<STX>MD03<SP>001<SP>+2578+01<SP>03 <SP>04<SP>0000000000 <SP>002 <SP>
                ↑          ↑                                    ↑
             Address  First Concentration(E-format)=25.78     Address+1

+5681+00<SP>03<SP>04<SP>0000000000<SP>003<SP>+1175+01<SP>03<SP>04<SP
  ↑                                     ↑        ↑
 Second Concentration = 5.681        Address+2  Third Concentration=11.75

0000000000<SP><CR>
```

The attached concentrations are in the selected gas units. The measurements that are attached to the response if not valid in a particular mode then a value of 0.0 will be reported.

## Measurements reported in response to DA command

The following measurements reported in response to DA command are for the Model 5020*i*.

The three measurements reported include:

- Cont $SO_4$
- Batch $SO_4$
- Cont $SO_2$

## Operating and Error Status

See Table D–1 for operating status and Table D–2 for error status for the Model 5020*i*.

**Table D–1.** Operating Status for Model 5020*i*

| | D7 | D6 | D5 | D4 | | D3 | D2 | D1 | D0 |
|---|---|---|---|---|---|---|---|---|---|
| **→ Bit** | **8** | **7** | **6** | **5** | | **4** | **3** | **2** | **1** |
| → Hex-value | 80 | 40 | 20 | 10 | | 08 | 04 | 02 | 01 |
| | MSB | | | | | LSB | | | |
| **Operating status:** | | | | | | | | | |
| Service Mode (On) | 0 | 0 | 0 | 0 | | 0 | 0 | 0 | 1 |
| Maintenance (Local) | 0 | 0 | 0 | 0 | | 0 | 0 | 1 | 0 |
| Zero gas (On) | 0 | 0 | 0 | 0 | | 0 | 1 | 0 | 0 |

| | D7 | D6 | D5 | D4 | | D3 | D2 | D1 | D0 |
|---|---|---|---|---|---|---|---|---|---|
| Span gas (On) | 0 | 0 | 0 | 0 | | 1 | 0 | 0 | 0 |
| Filter Mode / (Sample Mode, 0) | 0 | 0 | 0 | 1 | | 0 | 0 | 0 | 0 |
| Test LED (ON) | 0 | 0 | 1 | 0 | | 0 | 0 | 0 | 0 |
| Flash Lamp (OFF) | 0 | 1 | 0 | 0 | | 0 | 0 | 0 | 0 |
| Not used | 1 | 0 | 0 | 0 | | 0 | 0 | 0 | 0 |

**Table D–2.** Error Status for Model 5020*i*

| | D7 | D6 | D5 | D4 | | D3 | D2 | D1 | D0 |
|---|---|---|---|---|---|---|---|---|---|
| **→ Bit** | **8** | **7** | **6** | **5** | | **4** | **3** | **2** | **1** |
| → Hex-value | 80 | 40 | 20 | 10 | | 08 | 04 | 02 | 01 |
| | MSB | | | | | LSB | | | |
| **Error status:** | | | | | | | | | |
| Internal Temperature Alarm | 0 | 0 | 0 | 0 | | 0 | 0 | 0 | 1 |
| Reaction Chamber Temp Alarm | 0 | 0 | 0 | 0 | | 0 | 0 | 1 | 0 |
| Lamp Intensity Alarm | 0 | 0 | 0 | 0 | | 0 | 1 | 0 | 0 |
| Lamp Voltage Alarm | 0 | 0 | 0 | 0 | | 1 | 0 | 0 | 0 |
| Pressure Alarm | 0 | 0 | 0 | 1 | | 0 | 0 | 0 | 0 |
| Sample Flow Alarm | 0 | 0 | 1 | 0 | | 0 | 0 | 0 | 0 |
| Converter Temperature Alarm | 0 | 1 | 0 | 0 | | 0 | 0 | 0 | 0 |
| Converter Temp Diff Alarm | 1 | 0 | 0 | 0 | | 0 | 0 | 0 | 0 |