CAT 657E FRONT DPF
CLEAN DIESSEL TECHNOLOGIES

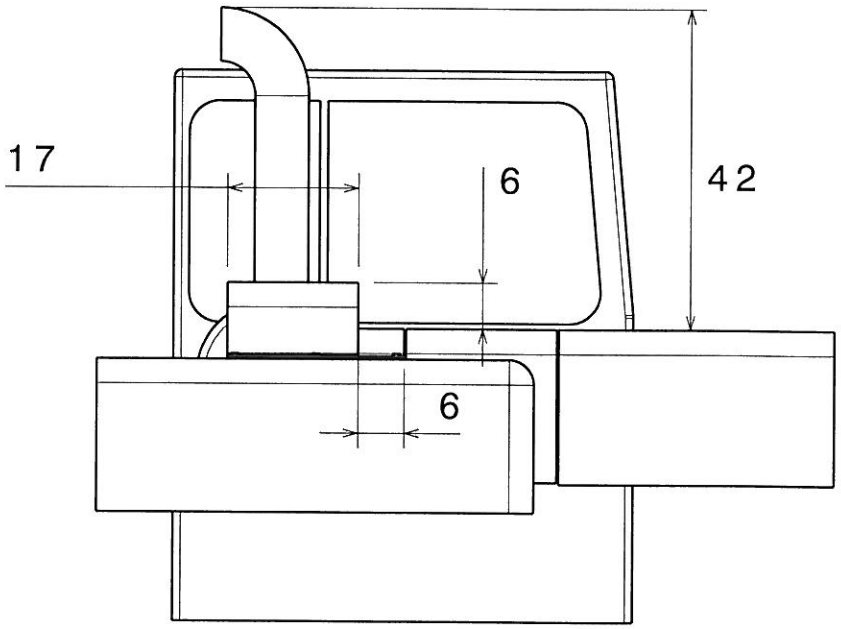

NOTE: DPF IS TO BE LOCATED AS A REPLACMENT FOR EXISTING CAT MUFFLER - THE INCREASED DIAMETER OF THE DPF WILL REQUIRE A SLIGHT MODIFICATION TO THE ENGINE COVER.

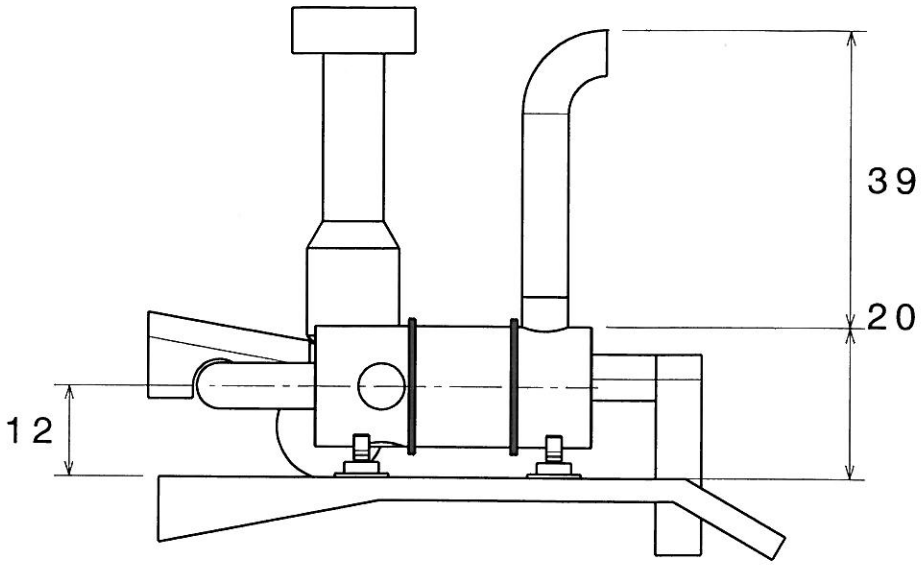

CAT 657E REAR DPF

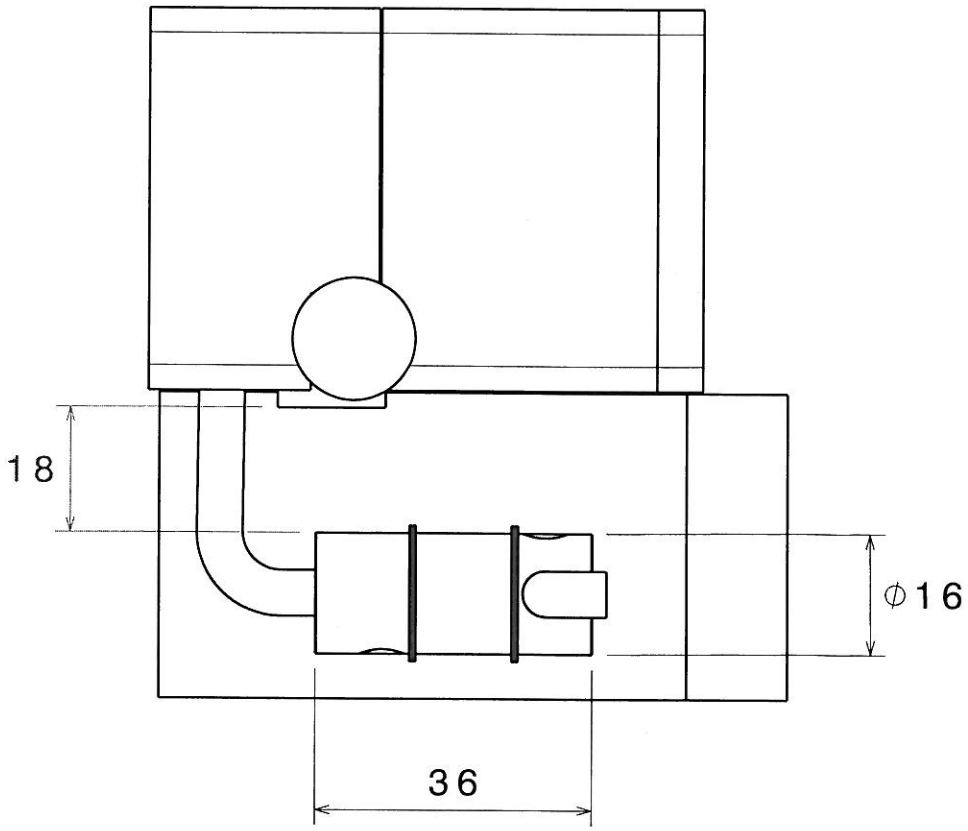

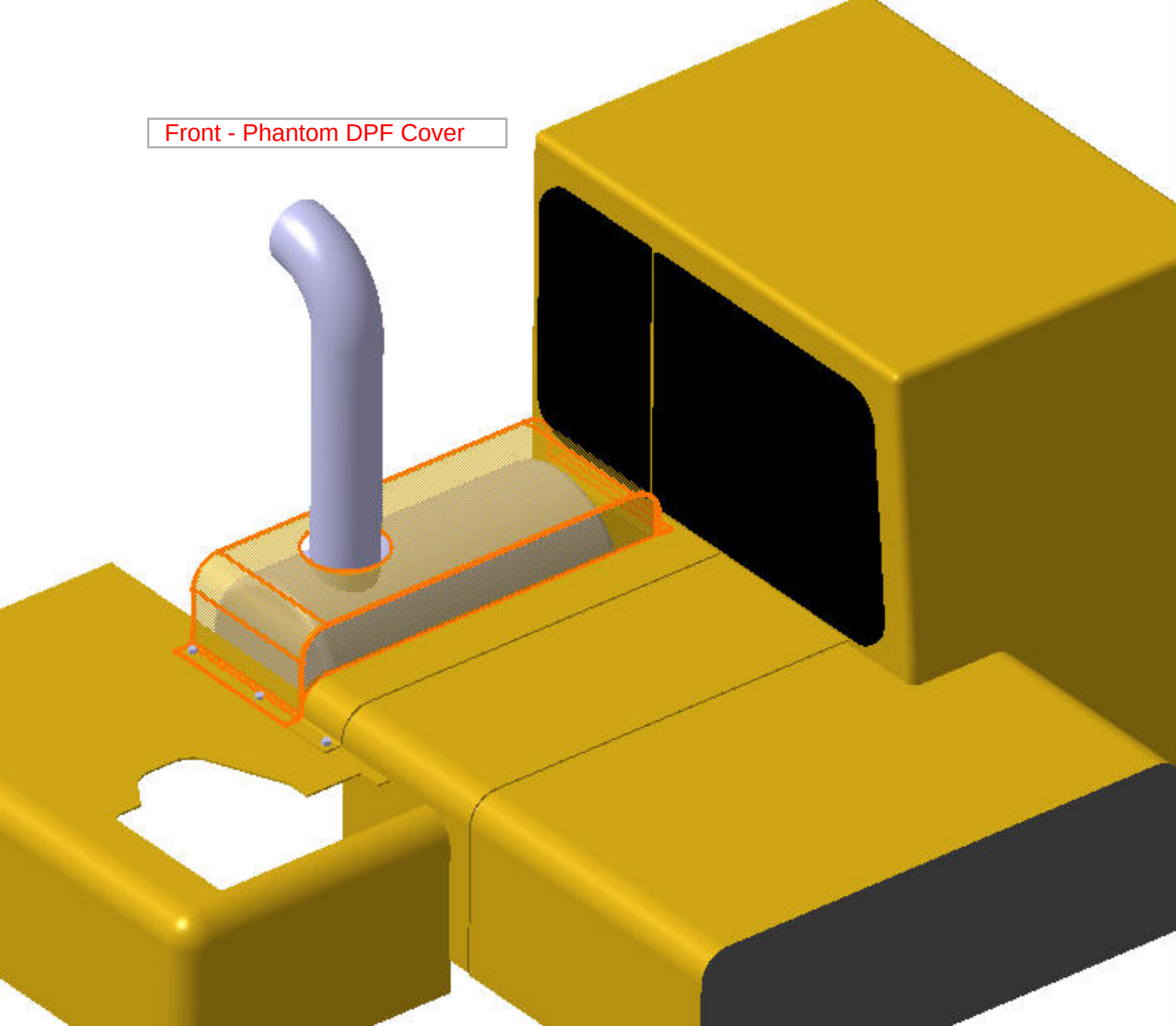
Front - Phantom DPF Cover

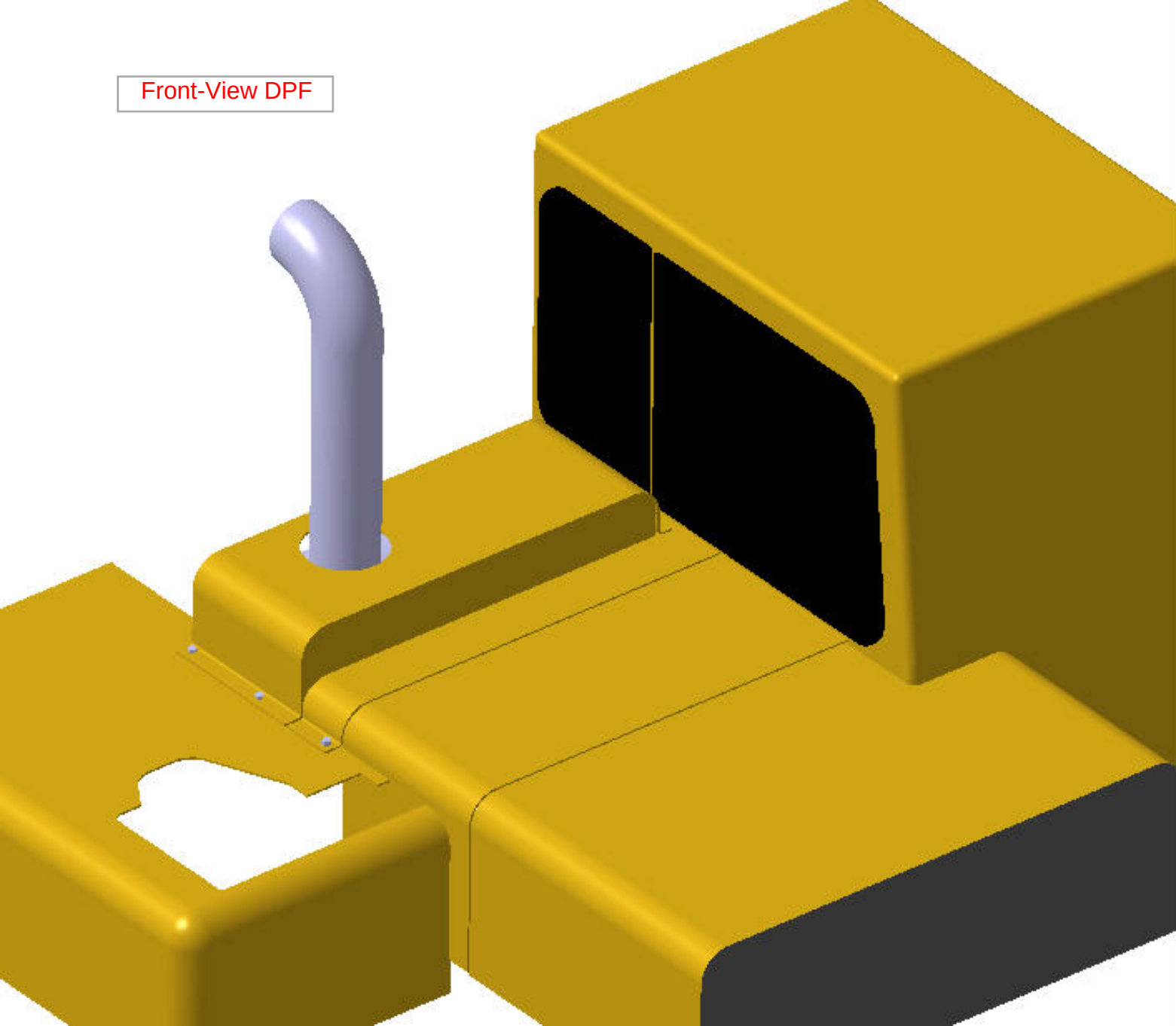
Front-View DPF

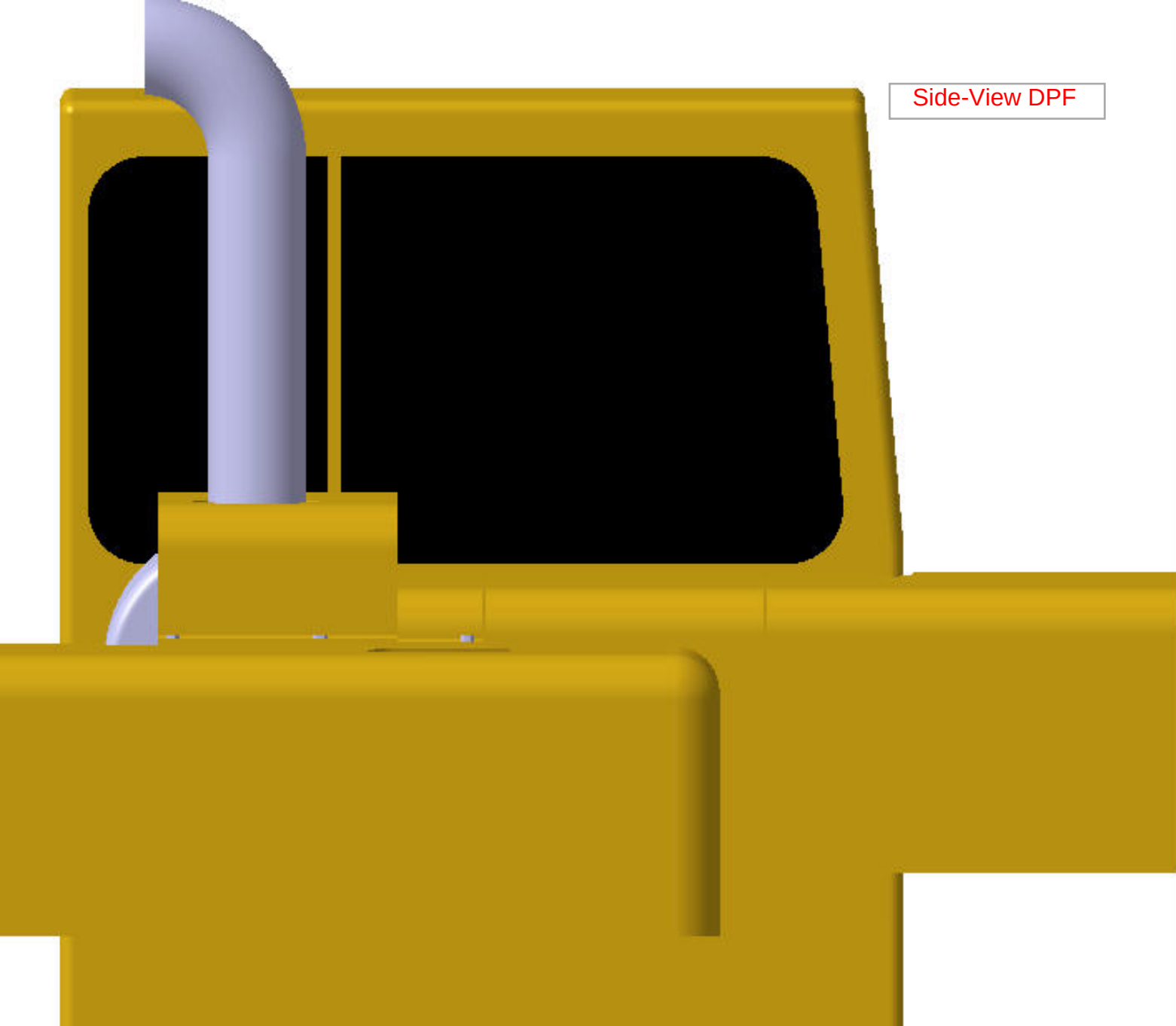
Side-View DPF

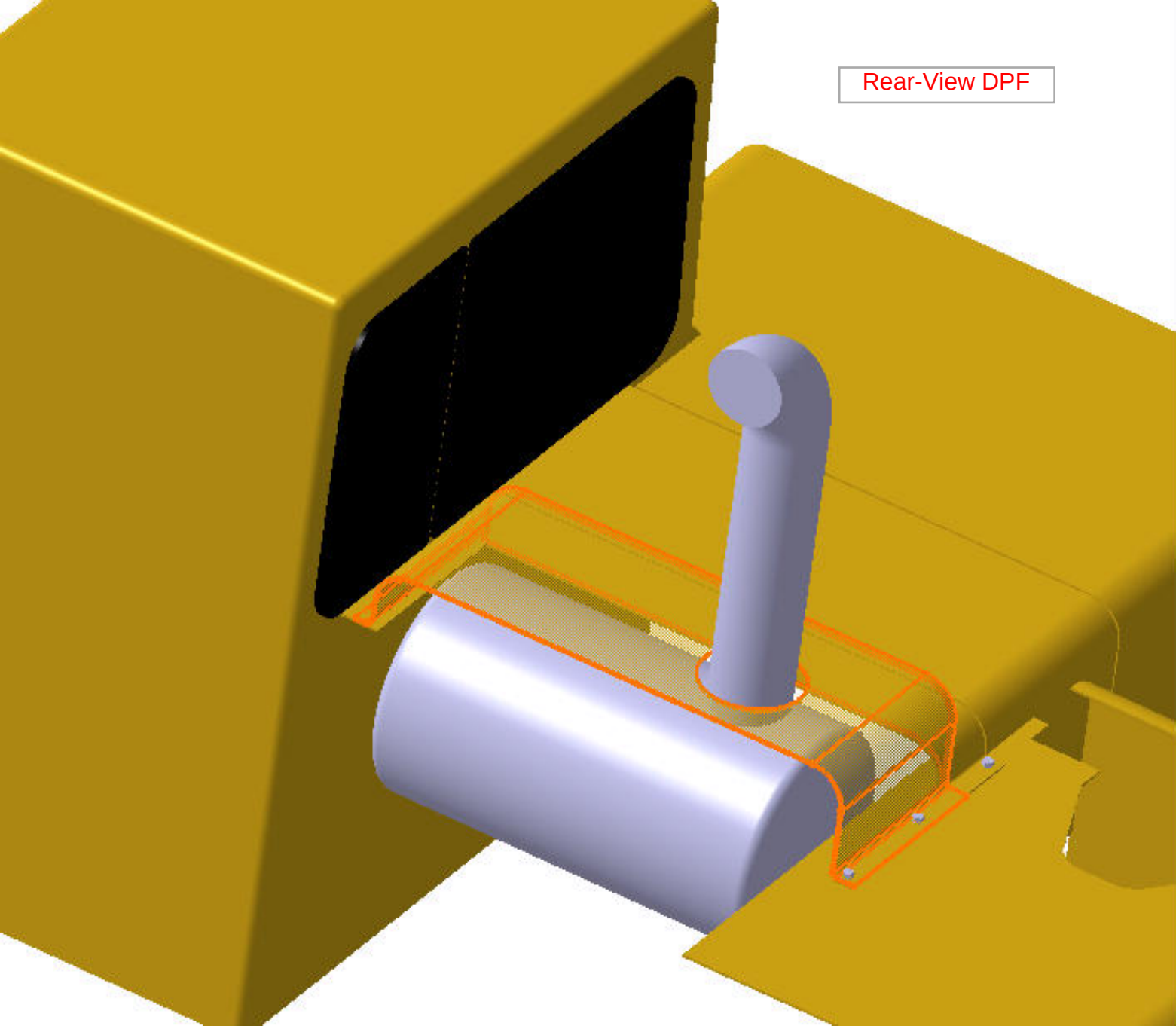
Rear-View DPF