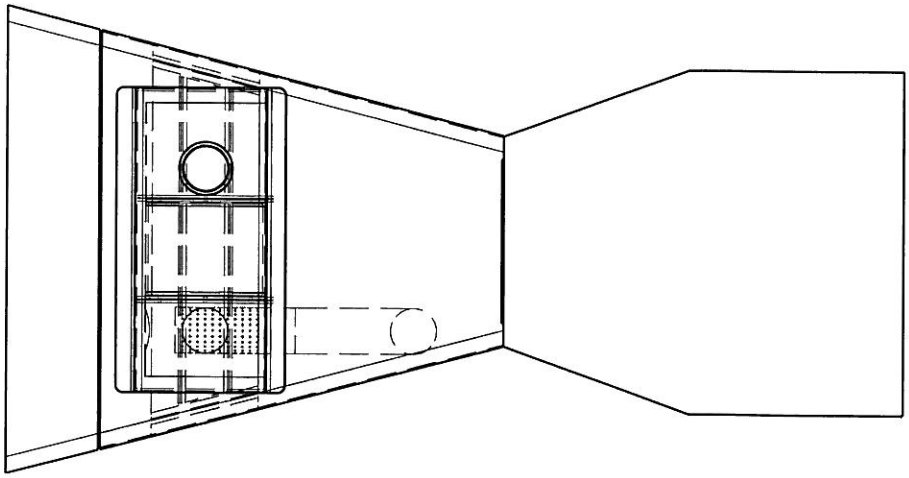

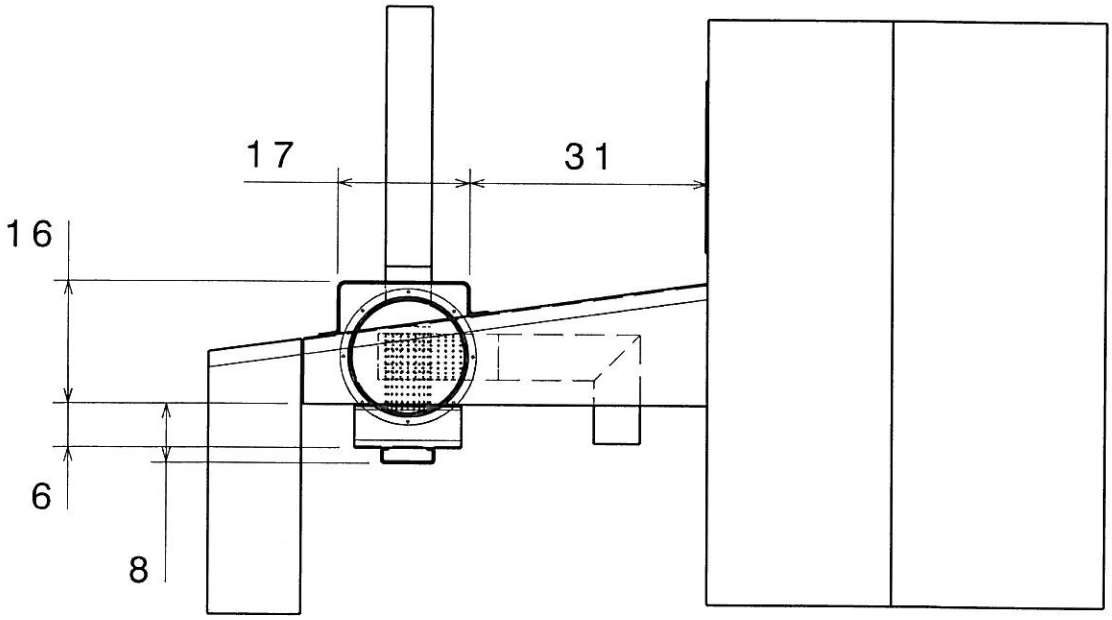
17
31
16
6
8

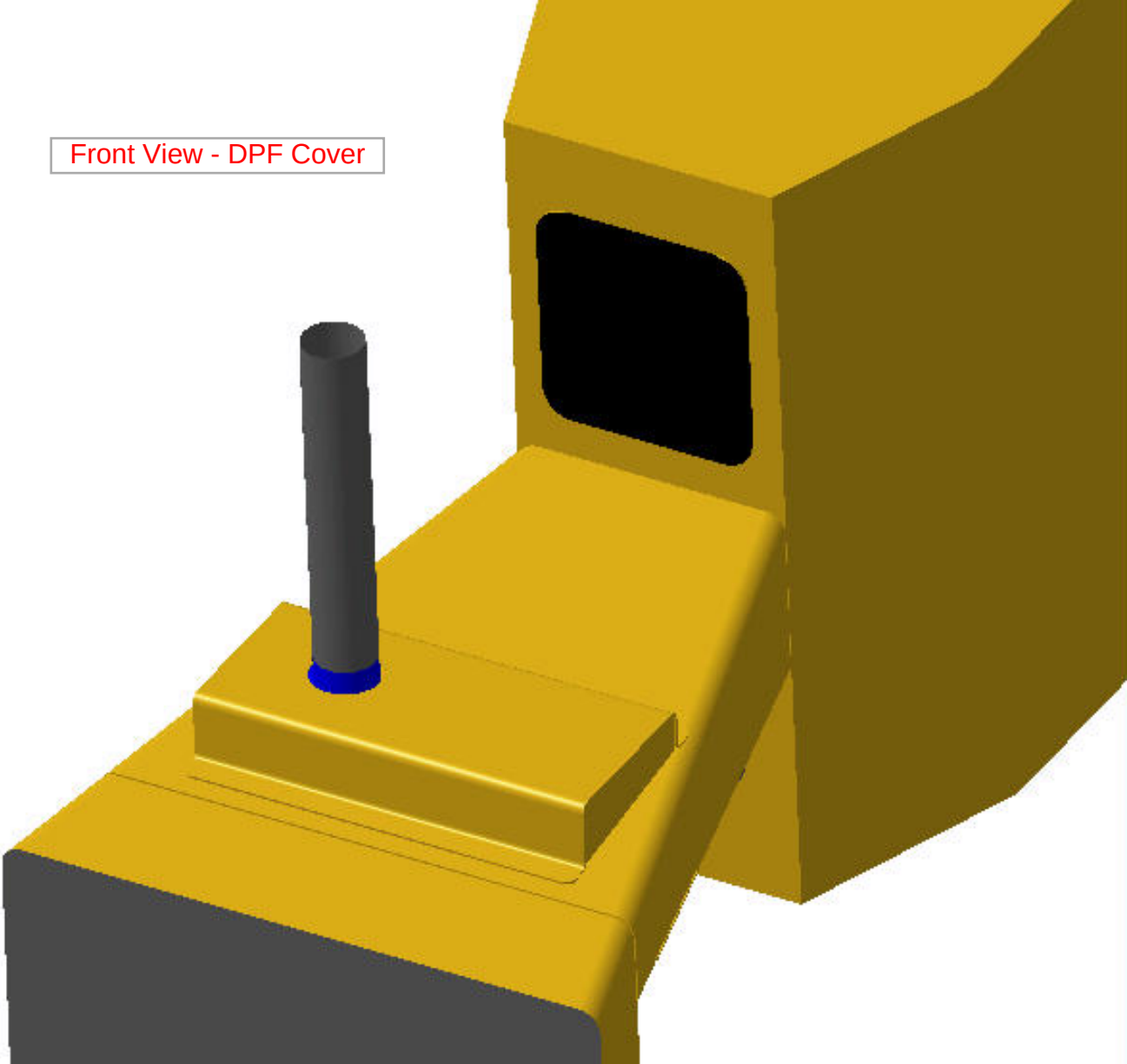
Front View - DPF Cover

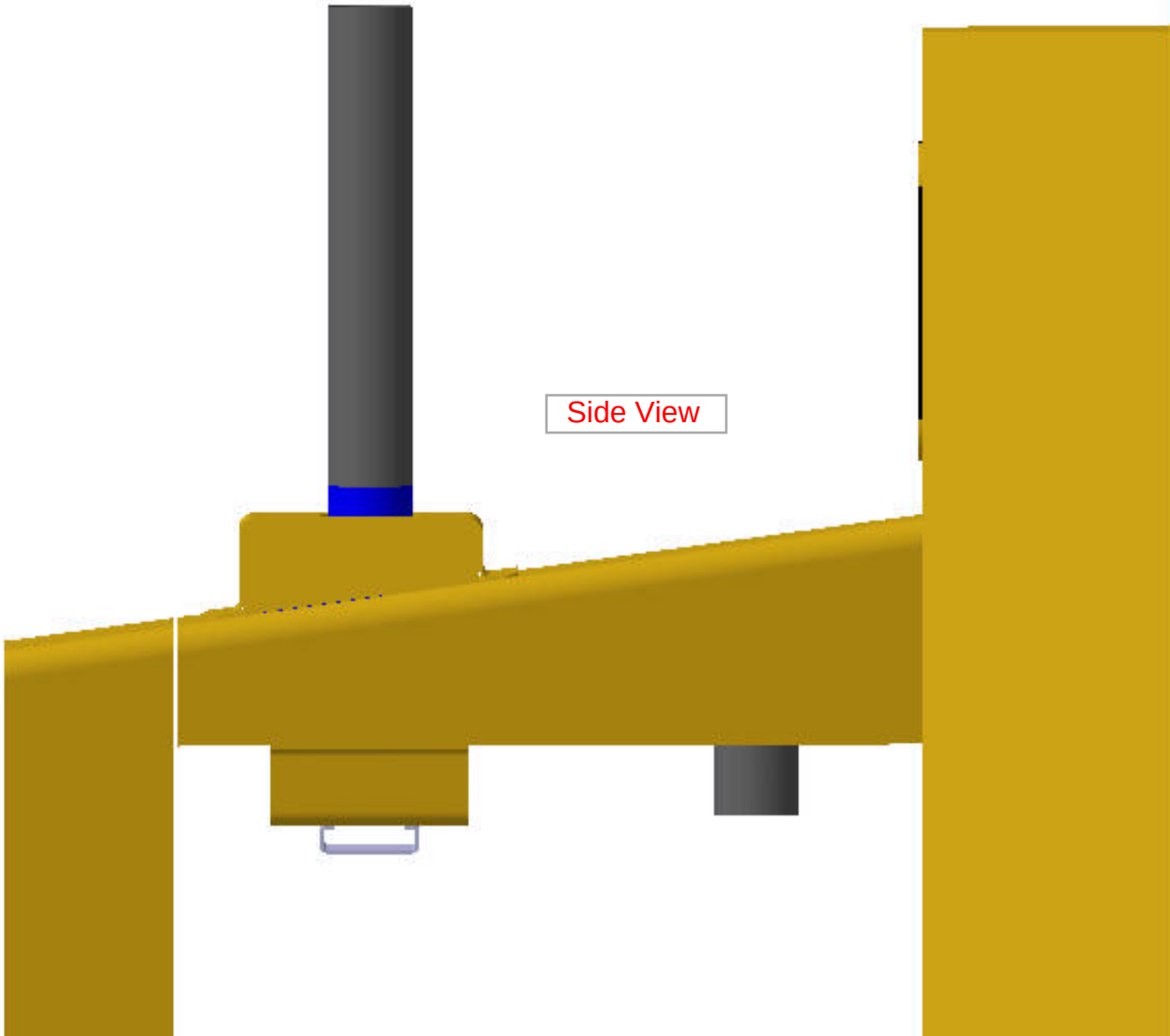
Side View

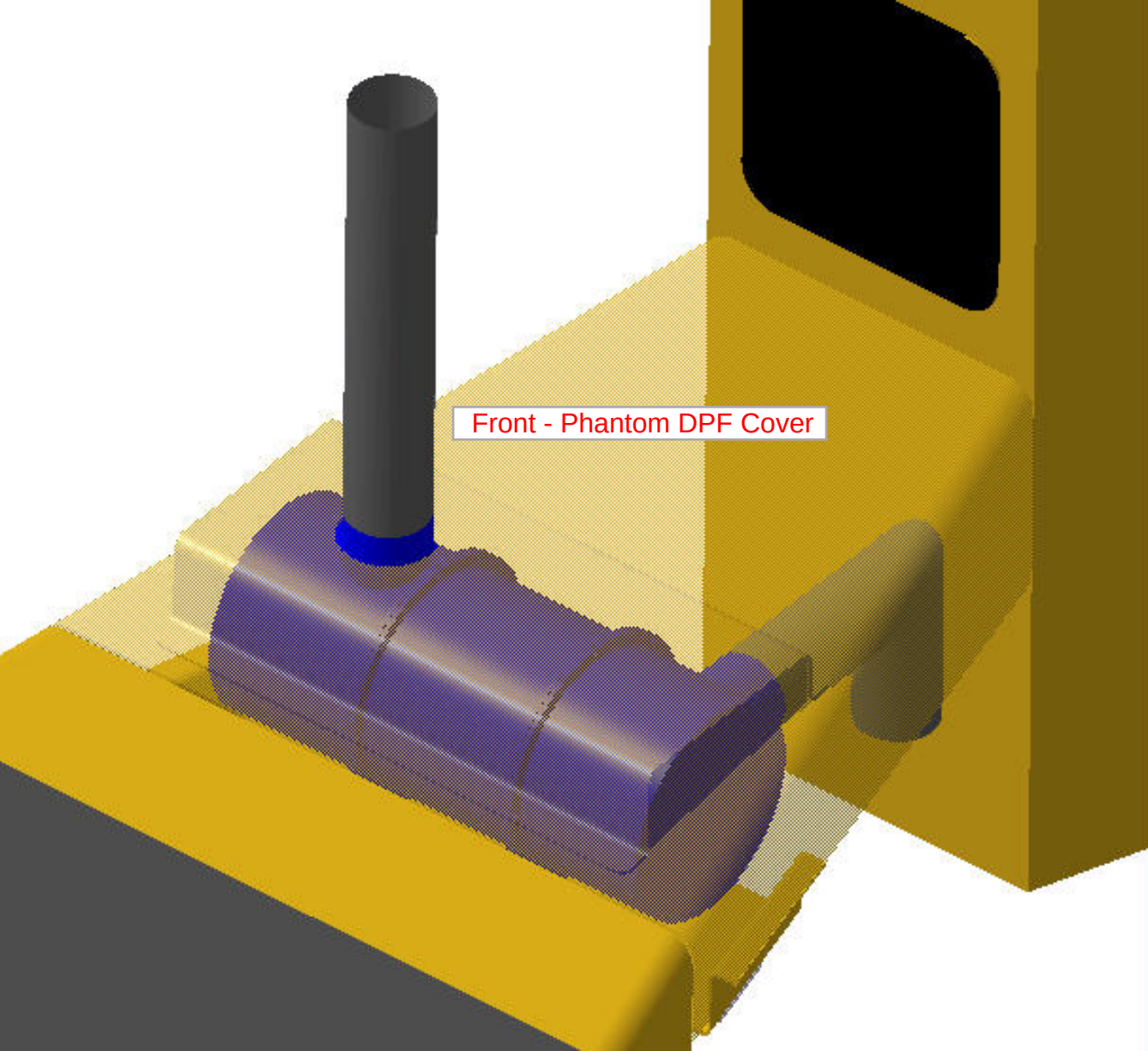
Front - Phantom DPF Cover

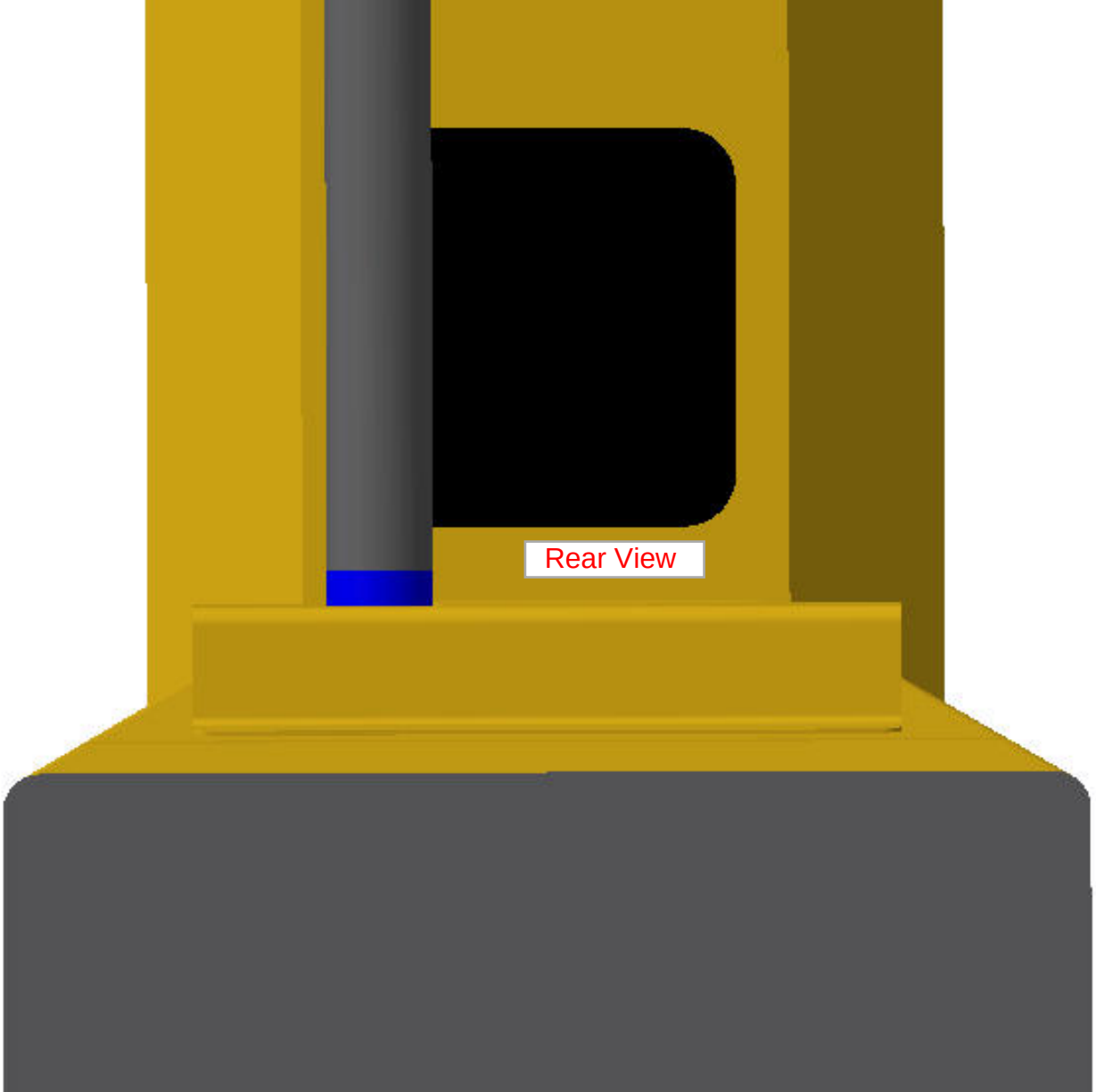
Rear View