 E.O. Book

State of California
AIR RESOURCES BOARD

EXECUTIVE ORDER A-6-128
Relating to Certification of New Motor Vehicles

GENERAL MOTORS CORPORATION

Pursuant to the authority vested in the Air Resources Board by Health and Safety Code Sections 43100, 43102, 43103, and 43835; and

Pursuant to the authority vested in the undersigned by Health and Safety Code Sections 39515 and 39516 and Executive Orders G-45-3 and G-45-4;

IT IS ORDERED AND RESOLVED: That General Motors Corporation exhaust emission control systems for 1978 model-year passenger cars are certified for the vehicles described below:

Engine Family: 820X6EU
Engine: 151 CID
Transmission: 3-Speed automatic
Exhaust Emission Control System: Three-Way Catalyst, Exhaust Gas Recirculation, Early Fuel Evaporation

Models and Engine Codes as listed in attachment.

The following are the recommended values to be listed on the window decal required by California Assembly-Line Test Procedures for 1978 model-year vehicles:

Engine Family	Hydrocarbons Grams per Mile	Carbon Monoxide Grams per Mile	Nitrogen Oxides Grams per Mile
820X6EU	.38	5.7	1.2

BE IT FURTHER RESOLVED: That the above models also comply with the Board's "Specifications for Fill Pipes and Openings of Motor Vehicle Fuel Tanks" (13 California Administrative Code, Section 2290) for the aforementioned model year, or have been granted a temporary exemption from the aforementioned "Specifications" by Executive Order AA-6 series.

BE IT FURTHER RESOLVED: That the above models also comply with "California Evaporative Emission Standards and Test Procedures for 1978 and Subsequent Model Gasoline-powered Motor Vehicles except Motorcycles".

Vehicles certified under this Executive Order must conform to all applicable California emission regulations.

The Department of Motor Vehicles, the California Highway Patrol, and the Bureau of Automotive Repair will be notified by copy of this order and attachment.

Executed at El Monte, California, this 27 day of September, 1977.

G. C. Hass, Chief
Vehicle Emissions Control Division

GO BOOK

State of California
AIR RESOURCES BOARD

EXECUTIVE ORDER A-6-128-1
Relating to Certification of New Motor Vehicles

GENERAL MOTORS CORPORATION

Pursuant to the authority vested in the Air Resources Board by Health and Safety Code Sections 43100, 43102, 43103, and 43835; and

Pursuant to the authority vested in the undersigned by Health and Safety Code Sections 39515 and 39516 and Executive Orders G-45-3 and G-45-4;

IT IS ORDERED AND RESOLVED: That General Motors Corporation exhaust emission control systems for 1978 model-year passenger cars are certified for the vehicles described below:

Engine Family: 820X6EU
Engine: 151 CID
Transmission: 4-Speed Manual
Exhaust Emission Control System: Three-Way Catalyst, Exhaust Gas Recirculation, Early Fuel Evaporation

Models and Engine Codes as listed in attachment.

The following are the recommended values to be listed on the window decal required by California Assembly-Line Test Procedures for 1978 model-year vehicles:

Engine Family	Hydrocarbons Grams per Mile	Carbon Monoxide Grams per Mile	Nitrogen Oxides Grams per Mile
820X6EU	.38	5.7	1.2

BE IT FURTHER RESOLVED: That the above models also comply with the Board's "Specifications for Fill Pipes and Openings of Motor Vehicle Fuel Tanks" (13 California Administrative Code, Section 2290) for the aforementioned model year, or have been granted a temporary exemption from the aforementioned "Specifications" by Executive Order AA-6 series.

BE IT FURTHER RESOLVED: That the above models also comply with "California Evaporative Emission Standards and Test Procedures for 1978 and Subsequent Model Gasoline-powered Motor Vehicles except Motorcycles".

These vehicles are in addition to those previously certified for this engine family.

Vehicles certified under this Executive Order must conform to all applicable California emission regulations.

The Department of Motor Vehicles, the California Highway Patrol, and the Bureau of Automotive Repair will be notified by copy of this order and attachment.

Executed at El Monte, California, this 16 day of January, 1978.

G. C. Hass

G. C. Hass, Chief
Vehicle Emissions Control Division

1978 AIR RESOURCES BOARD SUPPLEMENTAL DATA SHEET-GM FORMAT

Manufacturer GENERAL MOTORS CORPORATION Executive Order No. A-6-128 Page 1

Engine Family 820X6EU Engine (CID) 151

ABBREVIATIONS

Distributor
C-Centrifugal Advance
V-Vacuum Advance
VR-Vacuum Retard
HEI-High Energy Ignition

Fuel System
EFI
nV-nVenturi Carburetor

Exhaust Emission Control
AI-Air Injection
CAI-Catalyst Air Injection
EFI-Electronic Fuel Injection
EGR-Exhaust Gas Recirculation
EM-Engine Modification
EFE-Early Fuel Evaporation

ESAC-Electronic Spark Advance Control
OC-Oxidation Catalyst
OS-Oxygen Sensor
PAI-Pulse Air Injection
TC-Turbo Charged
TWC-Three Way Catalyst

DIVISION	BASIC BODY	TRIM	BODY TYPE	
1				CHEVROLET
	H	M	07	Monza 2 + 2 Hatchback Coupe
	H	R	07	Monza 2 + 2 Sport Hatchback Coupe
	H	M	15	Monza Station Wagon
	H	M	27	Monza Coupe
	H	R	27	Monza Sport Coupe
	H	M	77	Monza "S" Hatchback Coupe
2				PONTIAC
	H	M	07	Sunbird Sport Hatchback Coupe
	H	M	15	Sunbird Sport Safari Station Wagon
	H	E	27	Sunbird Coupe
	H	M	27	Sunbird Sport Coupe
3				OLDSMOBILE
	H	D	07	Starfire SX
	H	T	07	Starfire

ISSUED 092777.

1978 AIR RESOURCES BOARD SUPPLEMENTAL DATA SHEET - GM FORMAT

Passenger Cars

Manufacturer: General Motors Corporation Executive Order No. A-6-128 Pg. 2

Engine Family 820X6EU Engine (CID) 151 Transm. _____

Exhaust Emission Control System EGR,TWC,EFE +10% (A/C) Yes ☐ No ☒

Eng. Code	Air Cond.	Distrib. Type HEI C,V Mfgr. Part No.	Fuel System 2V Mfgr. Part No.	EGR System Part No. Service	Inertia Wt. Class	Divisions	Basic Body	Trim	Body Type	Trans-mission	Tune-up Label & Page No.	Rev. Notes
1	W	Delco Remy 1103365	Holley 10001056	17057175 No Service	3000	123 12 12 1	H H H H		07 15 27 77	A-3	RK 3	
2	W/O		10001058			123 12 12 1	H H H H		07 15 27 77		RJ 3	
3	W		10005604	17061701		123 1 12 1	H H H H		07 15 27 77	M-4	TL 4 or TN	A
4	W/O		10005603			123 12 12 1	H H H H		07 15 27 77		TK 4 or TM	A

Comments Some models have special road load HP settings. See page one for abbreviations.

Date of Issue: 092777. Revisions: A. E.C. 3 & 4 added by RC82-135, on 010978.

RJ 151 CU. IN. 820X6EU 8BEV

VEHICLE EMISSION CONTROL INFORMATION
GENERAL MOTORS CORPORATION

GM

LOW ALTITUDE CERTIFICATION

SET PARKING BRAKE AND BLOCK DRIVE WHEELS. REMOVE AIR CLEANER, PLUG THERMAC VACUUM SOURCE, AND START ENGINE. MAKE ALL ADJUSTMENTS WITH ENGINE AT NORMAL OPERATING TEMPERATURE, CHOKE OPEN, MANUAL TRANSMISSION IN NEUTRAL, AUTOMATIC TRANSMISSION IN DRIVE- UNLESS OTHERWISE NOTED.

1. DISCONNECT AND PLUG THE VACUUM ADVANCE HOSE AT DISTRIBUTOR.
2. SET TO SPECIFIED TIMING AT OR BELOW RECOMMENDED IDLE SPEED.
3. RECONNECT VACUUM ADVANCE HOSE EXCEPT 400 CU.IN. MANUAL TRANS. VEHICLES.
4. DISCONNECT PURGE HOSE AT CANISTER (PLUG HOSE ON 151 CU.IN. ENGINE).
5. DISCONNECT IDLE SOLENOID, IF SO EQUIPPED. SET CARB SCREW TO OBTAIN SPECIFIED RPM- SOLENOID INACTIVE.
6. IF SOLENOID EQUIPPED: CONNECT SOLENOID AND OPEN THROTTLE MOMENTARILY TO ASSURE SOLENOID IS FULLY EXTENDED. SET SOLENOID SCREW TO OBTAIN SPECIFIED RPM - SOLENOID ACTIVE.
7. RECONNECT DISTRIBUTOR VACUUM HOSE ON 400 CU.IN. ENGINE MANUAL TRANS. VEHICLES.
8. PLACE AUTOMATIC TRANSMISSION IN PARK.
9. DISCONNECT AND PLUG EGR VACUUM HOSE AT EGR VALVE.
10. ADJUST FAST IDLE SCREW ON TOP CAM STEP TO OBTAIN SPECIFIED RPM.
11. STOP ENGINE. REMOVE HOSE PLUGS, REPLACE AIR CLEANER, RECONNECT ALL HOSES.

CATALYST

EGR EFE	AUTO. TRANSMISSION
TIMING (°B.T.D.C. @ RPM)	14° @ 1000 MAX.
SPARK PLUG GAP	.060 INCH
SOL'D. SCREW (RPM) SOLENOID ACTIVE	650 IN DRIVE
CARB. SCREW (RPM) SOLENOID INACTIVE	500 IN DRIVE
CHOKE SETTING	1 NOTCH RICH
FAST IDLE SCREW (RPM)	2400 IN PARK
VACUUM BREAK SETTING REAR	—

IDLE MIXTURE SCREWS ARE PRESET AND CAPPED AT FACTORY. DO NOT BREAK CAPS. ADJUSTMENT DURING TUNE-UP NOT RECOMMENDED.

FOR MAJOR REPAIR, ADJUSTING MIXTURE SETTING BY OTHER THAN APPROVED SERVICE MANUAL PROCEDURE MAY VIOLATE FEDERAL AND/OR CALIFORNIA OR OTHER STATE LAWS.

SEE SERVICE MANUAL AND MAINTENANCE SCHEDULE II FOR ADDITIONAL INFORMATION.

Part No. 10002733

VACUUM HOSE ROUTING

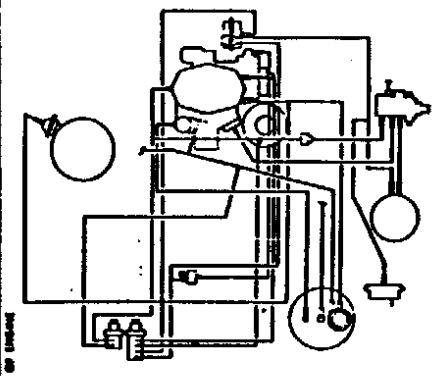

THIS VEHICLE CONFORMS TO U.S. EPA & CALIFORNIA REGULATIONS APPLICABLE TO 1978 MODEL YEAR NEW MOTOR VEHICLES.

RK 151 CU. IN. 820X6EU 8BEV

VEHICLE EMISSION CONTROL INFORMATION
GENERAL MOTORS CORPORATION

GM

LOW ALTITUDE CERTIFICATION

SET PARKING BRAKE AND BLOCK DRIVE WHEELS. DISCONNECT A C COMP. CLUTCH CONNECTOR. REMOVE AIR CLEANER, PLUG THERMAC VACUUM SOURCE, AND START ENGINE. MAKE ALL ADJUSTMENTS WITH ENGINE AT NORMAL OPERATING TEMPERATURE, CHOKE OPEN, A C OFF, MANUAL TRANSMISSION IN NEUTRAL, AUTOMATIC TRANSMISSION IN DRIVE - UNLESS OTHERWISE NOTED.

1. DISCONNECT AND PLUG THE VACUUM ADVANCE HOSE AT DISTRIBUTOR.
2. SET TO SPECIFIED TIMING AT OR BELOW RECOMMENDED IDLE SPEED.
3. RECONNECT VACUUM ADVANCE HOSE EXCEPT 400 CU.IN. MANUAL TRANS. VEHICLES.
4. DISCONNECT PURGE HOSE AT CANISTER (PLUG HOSE ON 151 CU.IN. ENGINE).
5. SET CARB SCREW TO OBTAIN SPECIFIED RPM - SOLENOID INACTIVE, A.C CONTROL OFF.
6. TURN A/C CONTROL ON AND OPEN THROTTLE MOMENTARILY TO ASSURE SOLENOID IS FULLY EXTENDED. SET SOLENOID SCREW TO OBTAIN SPECIFIED RPM - SOLENOID ACTIVE.
7. RECONNECT DISTRIBUTOR VACUUM HOSE ON 400 CU.IN. ENGINE MANUAL TRANS. VEHICLE.
8. PLACE AUTOMATIC TRANSMISSION IN PARK.
9. DISCONNECT AND PLUG EGR VACUUM HOSE AT EGR VALVE.
10. ADJUST FAST IDLE SCREW ON TOP CAM STEP TO OBTAIN SPECIFIED RPM.
11. STOP ENGINE, REMOVE HOSE PLUGS, REPLACE AIR CLEANER, RECONNECT A/C COMPRESSOR CLUTCH CONNECTOR AND ALL HOSES.

CATALYST

EGR EFE	AUTO. TRANSMISSION
TIMING (°B.T.D.C. @ RPM)	14° @ 1000 MAX.
SPARK PLUG GAP	.060 INCH
SOL'D. SCREW (RPM) SOLENOID ACTIVE	850 IN DRIVE
CARB. SCREW (RPM) SOLENOID INACTIVE	650 IN DRIVE
CHOKE SETTING	1 NOTCH RICH
FAST IDLE SCREW (RPM)	2400 IN PARK
VACUUM BREAK SETTING REAR	—

IDLE MIXTURE SCREWS ARE PRESET AND CAPPED AT FACTORY. DO NOT BREAK CAPS. ADJUSTMENT DURING TUNE-UP NOT RECOMMENDED.

FOR MAJOR REPAIR, ADJUSTING MIXTURE SETTING BY OTHER THAN APPROVED SERVICE MANUAL PROCEDURE MAY VIOLATE FEDERAL AND/OR CALIFORNIA OR OTHER STATE LAWS.

SEE SERVICE MANUAL AND MAINTENANCE SCHEDULE II FOR ADDITIONAL INFORMATION.

Part No. 10002734

VACUUM HOSE ROUTING

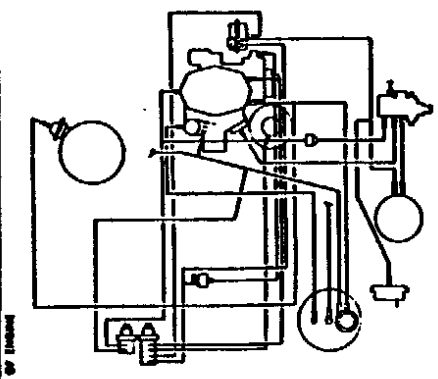

THIS VEHICLE CONFORMS TO U.S. EPA & CALIFORNIA REGULATIONS APPLICABLE TO 1978 MODEL YEAR NEW MOTOR VEHICLES.

Issued: 092777.

S.D.Sheet 4 added by RC 82-135.

TK 2.5 LITRE 820X8EU 8BEV

VEHICLE EMISSION CONTROL INFORMATION
GENERAL MOTORS CORPORATION

LOW ALTITUDE CERTIFICATION

SET PARKING BRAKE AND BLOCK DRIVE WHEELS.
REMOVE AIR CLEANER AND START ENGINE. MAKE ALL ADJUSTMENTS WITH ENGINE AT NORMAL OPERATING TEMPERATURE, CHOKE OPEN, MANUAL TRANSMISSION IN NEUTRAL.

1. DISCONNECT AND PLUG THE VACUUM ADVANCE HOSE AT DISTRIBUTOR.
2. SET TO SPECIFIED TIMING AT OR BELOW RECOMMENDED IDLE SPEED.
3. RECONNECT VACUUM ADVANCE HOSE.
4. DISCONNECT AND PLUG PURGE HOSE AT CANISTER.
5. SET THE SOLENOID IDLE SCREW TO OBTAIN SPECIFIED RPM WITH SOLENOID ACTIVE. DISCONNECT SOLENOID WIRE, SET IDLE SPEED SCREW TO OBTAIN SPECIFIED RPM WITH SOLENOID INACTIVE. RECONNECT SOLENOID WIRE.
6. DISCONNECT AND PLUG EGR VACUUM HOSE AT EGR VALVE.
7. ADJUST FAST IDLE SCREW ON TOP STEP OF FAST IDLE CAM TO OBTAIN SPECIFIED RPM.
8. STOP ENGINE. REMOVE HOSE PLUGS AND RECONNECT EGR VACUUM HOSE AND CANISTER HOSE.

CATALYST

EGR EFE	MAN. TRANSMISSION
TIMING (°B.T.D.C. @ RPM)	14° @ 1000 MAX
SPARK PLUG GAP	.060 INCH
SOL'D SCREW (RPM) SOLENOID ACTIVE	1000 IN NEUTRAL
CARB SCREW (RPM) SOLENOID INACTIVE	500 IN NEUTRAL
CHOKE SETTING	2 NOTCH RICH
FAST IDLE SCREW (RPM)	2000 IN NEUTRAL
VACUUM BREAK SETTING REAR	——

IDLE MIXTURE SCREWS ARE PRESET AND CAPPED AT FACTORY. DO NOT BREAK CAPS. ADJUSTMENT DURING TUNE-UP NOT RECOMMENDED.

FOR MAJOR REPAIR, ADJUSTING MIXTURE SETTING BY OTHER THAN APPROVED SERVICE MANUAL PROCEDURE MAY VIOLATE FEDERAL AND/OR CALIFORNIA OR OTHER STATE LAWS.

SEE SERVICE MANUAL AND MAINTENANCE SCHEDULE II FOR ADDITIONAL INFORMATION.
Part No. 1000000

VACUUM HOSE ROUTING

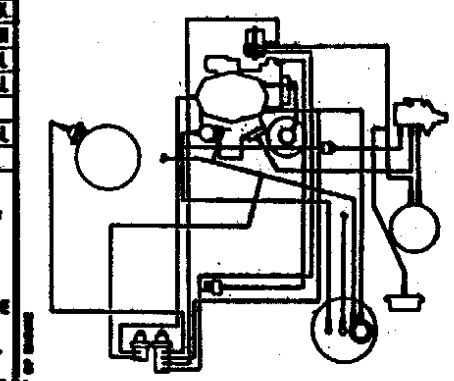

THIS VEHICLE CONFORMS TO U.S. EPA AND CALIFORNIA REGULATIONS APPLICABLE TO 1978 MODEL YEAR NEW MOTOR VEHICLES.

TL 2.5 LITRE 820X8EU 8BEV

VEHICLE EMISSION CONTROL INFORMATION
GENERAL MOTORS CORPORATION

LOW ALTITUDE CERTIFICATION

SET PARKING BRAKE AND BLOCK DRIVE WHEELS. DISCONNECT A/C COMP. CLUTCH CONNECTOR, REMOVE AIR CLEANER AND START ENGINE. MAKE ALL ADJUSTMENTS WITH ENGINE AT NORMAL OPERATING TEMPERATURE, CHOKE OPEN, A/C OFF, MANUAL TRANSMISSION IN NEUTRAL.

1. DISCONNECT AND PLUG THE VACUUM ADVANCE HOSE AT DISTRIBUTOR.
2. SET TO SPECIFIED TIMING AT OR BELOW RECOMMENDED IDLE SPEED.
3. RECONNECT VACUUM ADVANCE HOSE.
4. DISCONNECT AND PLUG PURGE HOSE AT CANISTER.
5. SET IDLE SPEED SCREW TO OBTAIN SPECIFIED RPM. TURN A/C CONTROL SWITCH ON. OPEN THROTTLE MOMENTARILY TO INSURE SOLENOID IS FULLY EXTENDED. SET SOLENOID IDLE SCREW TO SPECIFIED RPM. TURN A/C OFF.
6. DISCONNECT AND PLUG EGR VACUUM HOSE AT EGR VALVE.
7. ADJUST FAST IDLE SCREW ON TOP STEP OF FAST IDLE CAM TO OBTAIN SPECIFIED RPM.
8. STOP ENGINE. REMOVE HOSE PLUGS, AND RECONNECT EGR VACUUM HOSE, CANISTER HOSE AND A/C COMPRESSOR CLUTCH CONNECTOR.

CATALYST

EGR EFE PAIR	MAN. TRANSMISSION
TIMING (°B.T.D.C. @ RPM)	14° @ 1000 MAX
SPARK PLUG GAP	.060 INCH
SOL'D SCREW (RPM) SOLENOID ACTIVE	1200 IN NEUTRAL
CARB SCREW (RPM) SOLENOID INACTIVE	1000 IN NEUTRAL
CHOKE SETTING	2 NOTCH RICH
FAST IDLE SCREW (RPM)	2000 IN NEUTRAL
VACUUM BREAK SETTING REAR	——

IDLE MIXTURE SCREWS ARE PRESET AND CAPPED AT FACTORY. DO NOT BREAK CAPS. ADJUSTMENT DURING TUNE-UP NOT RECOMMENDED.

FOR MAJOR REPAIR, ADJUSTING MIXTURE SETTING BY OTHER THAN APPROVED SERVICE MANUAL PROCEDURE MAY VIOLATE FEDERAL AND/OR CALIFORNIA OR OTHER STATE LAWS.

SEE SERVICE MANUAL AND MAINTENANCE SCHEDULE II FOR ADDITIONAL INFORMATION.
Part No. 1000000

VACUUM HOSE ROUTING

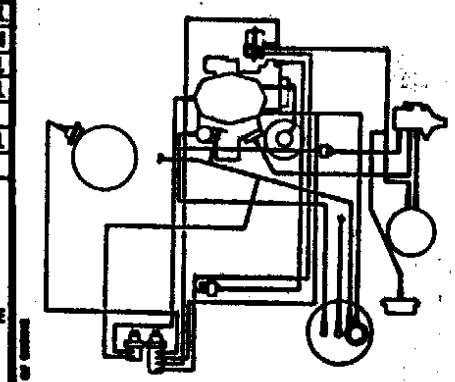

THIS VEHICLE CONFORMS TO U.S. EPA AND CALIFORNIA REGULATIONS APPLICABLE TO 1978 MODEL YEAR NEW MOTOR VEHICLES.

Labels TM & TN carry same information as TK & TL in a smaller format.
TK & TL are on Chevrolets. TM &TN are on Pont. & Olds.

Issued: 010978.