E.O. Book

State of California
AIR RESOURCES BOARD

EXECUTIVE ORDER A-24-9
Relating to Certification of New Motor Vehicles

AUTOMOBILES PEUGEOT

Pursuant to the authority vested in the Air Resources Board by Health and Safety Code Sections 43100, 43102, 43103, and 43835; and

Pursuant to the authority vested in the undersigned by Health and Safety Code Sections 39515 and 39516 and Executive Orders G-45-3 and G-45-4;

IT IS ORDERED AND RESOLVED: That Automobiles Peugeot exhaust emission control systems are certified as described below for 1980 model-year gasoline-powered passenger car.

Engine Family	Displacement Cubic Inches	Exhaust Emission Control Systems (Special Features)
XN6	120.3	Oxidation Catalyst Three-way Catalyst with Closed Loop Air Injection (Mechanical Fuel Injection)

Vehicle Models, Transmissions, Engine Codes and Evaporative Emission Control Families as listed on attachments.

The following are the certification emission values to be listed on the window decal required by California Assembly-Line Test Procedures for 1980 model-year vehicles:

Engine Family	Hydrocarbons Grams per Mile	Carbon Monoxide Grams per Mile	Nitrogen Oxides Grams per Mile
XN6	0.17	3.5	0.4

BE IT FURTHER RESOLVED: That the listed vehicle models also comply with "California Evaporative Emission Standards and Test Procedures for 1978 and Subsequent Model Gasoline-Powered Motor Vehicles except Motorcycles".

BE IT FURTHER RESOLVED: That the listed vehicle models also comply with the Board's "Specifications for Fill Pipes and Openings of Motor Vehicle Fuel Tanks" (Title 13, California Administrative Code, Section 2290) for the aforementioned model year.

BE IT FURTHER RESOLVED: That the listed vehicle models also comply with the Board's high altitude requirements and highway emission standards as stipulated in "California Exhaust Emission Standards and Test Procedures for 1980 Model Passenger Cars, Light-Duty Trucks, and Medium-Duty Vehicles".

BE IT FURTHER RESOLVED: That Automobiles Peugeot has provided to the Executive Officer all material required to demonstrate certification compliance with the Board's emission control system warranty regulations (Title 13, California Administrative Code, Section 2036).

Vehicles certified under this Executive Order must conform to all applicable California emission regulations.

The Bureau of Automotive Repair will be notified by copy of this order and attachment.

Executed at El Monte, California this 19th day of February, 1980.

K. D. Drachand, Chief
Mobile Source Control Division

1980 AIR RESOURCES BOARD SUPPLEMENTAL DATA SHEET

Manufacturer Automobiles Peugeot Executive Order No. A-24-9 Page 1

Engine Family XN 6 Engine (CID) 120.3

ABBREVIATIONS

Ignition System
CA-Centrifugal Advance
EEC-Electronic Engine Control
EI-Electronic Ignition
ESAC-Electronic Spark Advance Control
VA-Vacuum Advance
VR-Vacuum Retard

Fuel System
EFI, MFI
nV-nVenturi Carburetor
VV-Variable Venturi

Exhaust Emissions Control System
AI-Air Injection
CL-Closed Loop
EGR-Exhaust Gas Recirculation
EM-Engine Modification
OC-Oxidation Catalyst
PAI-Pulse Air Injection
TR-Thermal Reactor
TWC-Three Way Catalyst

Special Features
CCAV-Combustion Chamber Air Valve
EFI-Electronic Fuel Injection
MFI-Mechanical Fuel Injection
TC-Turbo Charged

Models: 505 Sedan

051479

E.O. # A-24-9

1980 AIR RESOURCES BOARD SUPPLEMENTAL DATA SHEET

[xx] Passenger Cars [ ] Light-Duty Trucks [ ] Medium-Duty Vehicles [x] Gas [ ] Diesel

Manufacturer Automobiles Peugeot Page 2

Engine Family XN6 CID-Type 120.3 cu. in. Engine Code XN6.A3 XN6.M5

ECS (Special Features) (MFI)-AI-3WAY/OXI-LAMBDA SENSOR +10% (A/C) Yes X NO

Engine Code	Vehicle Models (if Coded see attachment)	Trans.	Test Weight Class (Inertia)	Ign. System EI Distributor Part No.	Fuel System MFI Part No.	EGR Valve Part No.	Label Ident
XN6.A3	505 (4 dr. Sedan) 505S (4 dr. Sedan)	A3 A3	3375 (3500)	Ducellier M118 AC Delco Module 12 VDR 512	Bosch Air/Fuel (mixture) Control Unit 0438 100 064 Air Flow Sensor 0438 120 119 Fuel Distributor 0438 040 071	NONE	See SDS pp. 3&4
XN6.M5	505 (4 dr. Sedan) 505S (4 dr. Sedan)	M5 M5	3375 (3500)				

Comments. See page one for abbreviations and evaporative emission family identification. Please refer to manufacturer's HP list for correct dyno test HP settings based on model, equipment and inertia weight class.

Date of Issue -

VEHICLE EMISSION Control information label

only 505 Gazoline Injection Model

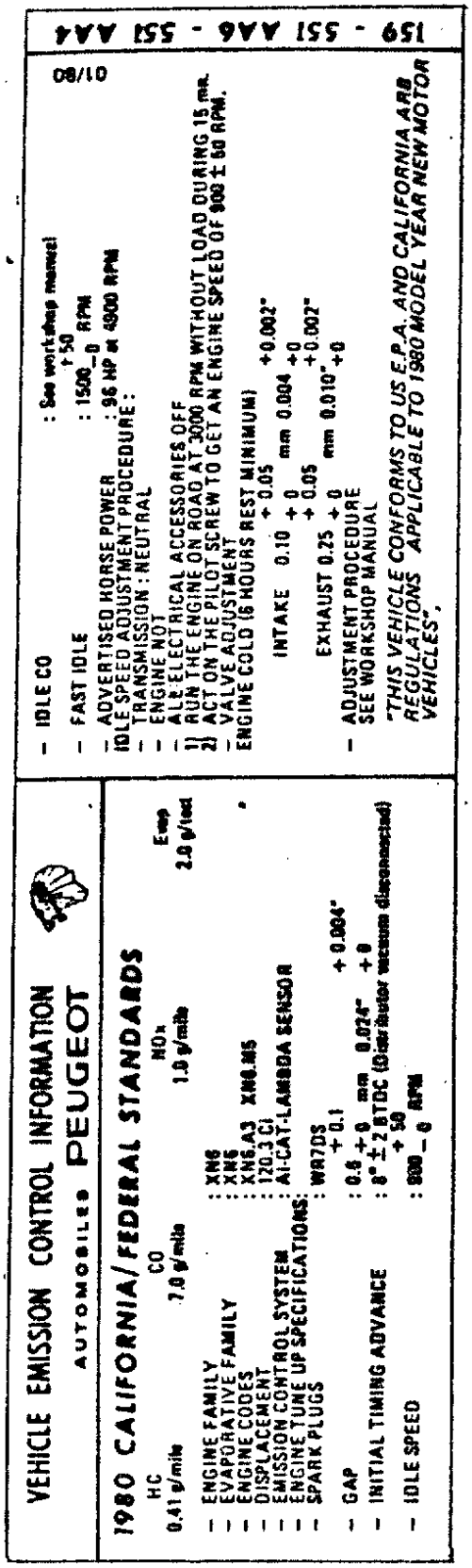

VEHICLE EMISSION CONTROL INFORMATION

AUTOMOBILES PEUGEOT

1980 CALIFORNIA/FEDERAL STANDARDS

HC	CO	NO_x	Evap
0.41 g/mile	7.0 g/mile	1.0 g/mile	2.0 g/test

- ENGINE FAMILY : XN6
- EVAPORATIVE FAMILY : XN6
- ENGINE CODES : XN6.A3 XN6.M5
- DISPLACEMENT : 120.3 CI
- EMISSION CONTROL SYSTEM : AI-CAT-LAMBDA SENSOR
- ENGINE TUNE UP SPECIFICATIONS:
- SPARK PLUGS : WR7DS
- GAP : 0.6 + 0.1 mm 0.024" + 0.004"
- INITIAL TIMING ADVANCE : 8° ± 2 BTDC (Distributor vacuum disconnected)
- IDLE SPEED : 800 + 50 − 0 RPM
- IDLE CO : See workshop manual
- FAST IDLE : 1500 + 50 − 0 RPM
- ADVERTISED HORSE POWER : 96 HP at 4900 RPM

IDLE SPEED ADJUSTMENT PROCEDURE:

- TRANSMISSION : NEUTRAL
- ENGINE HOT
- ALL ELECTRICAL ACCESSORIES OFF

1) RUN THE ENGINE ON ROAD AT 3000 RPM WITHOUT LOAD DURING 15 mn.
2) ACT ON THE PILOT SCREW TO GET AN ENGINE SPEED OF 800 ± 50 RPM.

- VALVE ADJUSTMENT

ENGINE COLD (6 HOURS REST MINIMUM)

INTAKE	0.10 + 0.05	mm 0.004 + 0.002"	
EXHAUST	0.25 + 0.05	mm 0.010" + 0.002"	

- ADJUSTMENT PROCEDURE SEE WORKSHOP MANUAL

"THIS VEHICLE CONFORMS TO US E.P.A. AND CALIFORNIA ARB REGULATIONS APPLICABLE TO 1980 MODEL YEAR NEW MOTOR VEHICLES".

08/10

159 - 551 AA6 - 551 AA4

Material plastic

Fastening Method : Adhesives - will tear apart when removal is attempted.

Color : text : white
black ground : black

Location : on water radiator shroud

VEHICLE EMISSION Control Information Label

Only 505 Gazoline Injection Model

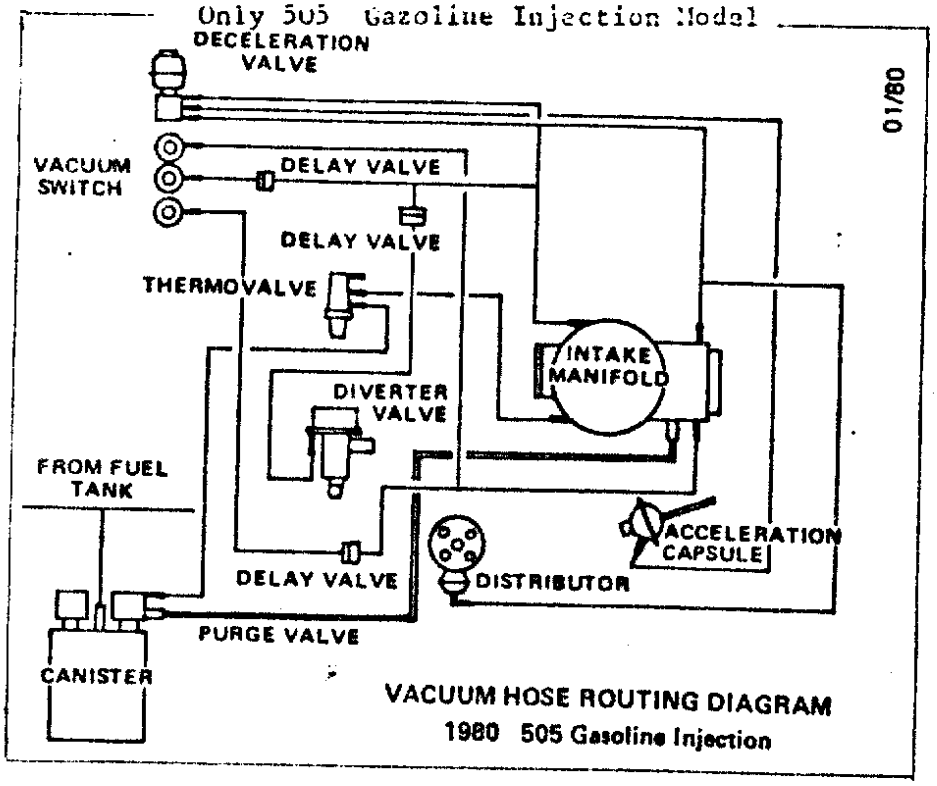

Material : Plastic

Fastening Method : Adhesives - will tear apart when removal is attempted.

Color : text : white

black ground : black

Location: Water Radiator Shroud