ATTACHMENT B

State of California
AIR RESOURCES BOARD

CALIFORNIA EXHAUST EMISSION STANDARDS AND TEST PROCEDURES FOR 1995 AND LATER UTILITY AND LAWN AND GARDEN EQUIPMENT ENGINES

Adopted: March 20, 1992
Amended: April 8, 1993
Amended: _____

NOTE: This document is printed in a style to indicate changes from the existing provisions. All existing language is indicated by plain type. All additions and deletions to language therein are indicated by underline and ~~strikeout~~, respectively.

The numbering convention employed in this document, in order of priority, is: I.1.a.1.i.A.

TABLE OF CONTENTS

~~Section~~ ~~Page~~

Part I. Emission Regulations for 1995 and Later New Utility and Lawn and Garden Equipment Engines, General Provisions

Section		Page
1	General Applicability	4~~5~~
2	Definitions	4~~5~~
3	Abbreviations	6~~8~~
4	Measurement System	7~~9~~
5	General Standards; Increase In Emissions; Unsafe Conditions	7~~9~~
6	Defeat Devices, Prohibition	7~~9~~
7	Reserved	8~~10~~
8	Replacement Engines	8~~10~~
9	Exhaust Emission Standards for 1995 and Later Utility and Lawn and Garden Engines	8~~11~~
10	Maintenance and Warranty Instructions	9~~12~~
11	Labeling	9~~12~~
12	Submission of Engine Identification Number	1~~0~~12
13	~~Production Engines~~ Reserved	1~~0~~13
14	Application for Certification	1~~0~~13
15	Approval of Application for Certification	1~~1~~15
16	Engine Displacement of Utility and Lawn and Garden Equipment Engines	1~~2~~15
17	Engine Families and Engine Family Groups	1~~2~~15
18	Test ~~Fleet~~ Engines	1~~2~~16
19	Executive Officer's ~~Fleet~~ Engines	1~~3~~18
20	Test Procedures, General Requirements	1~~3~~18
21	~~Break-In~~ Service Accumulation Procedures; Test Engines	1~~3~~20
22	Scheduled Maintenance; Test Engines	1~~4~~21
23	Unscheduled Maintenance; Test Engines	1~~5~~21
24	Engine Failure	1~~6~~22
25	Data Submission	1~~6~~23
26	Testing by the Executive Officer	1~~6~~23
27	Certification	1~~6~~24
28	Amendments to the Application	1~~7~~25
29	Alternative Procedure For Notification of Additions and Changes	1~~8~~25
30	Maintenance of Records	1~~9~~26
31	Right of Entry	2~~0~~28
32	Denial, Revocation, or Suspension of Certification	2~~3~~30
33	Adjudicatory Hearing	2~~4~~31

Part II. Raw Gas Method Test Procedures

Section		Page
1	Purpose	2532
2	Engine Test Setup; Exhaust Gas Analytical System; Engine Parameters	2532
3	Analytical Gases	3039
4	Calibrations, Frequency and Overview	3041
5	Dynamometer Calibration	3141
6	Exhaust Sample Preparation and Analysis	31
76	Hydrocarbon Analyzer Calibration	3242
87	Carbon Monoxide Analyzer Calibration	3443
98	Oxides of Nitrogen Analyzer Calibration	3544
109	Carbon Dioxide Analyzer Calibration	3645
1110	Test Sequence Conditions, General Requirements	3745
11	Engine Fuel and Lubricant Specifications	46
12	Engine Test Procedure	3747
13	Records Required	4052
14	Data Reduction and Presentation of Results	4153

Part III. Constant Volume Sampling Test Procedures

Section		Page
1	Reserved	5865
2	Exhaust Gas Sampling System	5865
3	Exhaust Gas Analytical System	6268
4	Fuel and Engine Lubricant Specifications	6470
5	Analytical Gases	6571
6	Exhaust Emission Measuring Procedures Reserved	6672
7	Calibrations, Frequency and Overview	6673
8	Dynamometer Calibration	6773
9	Constant Volume Sampler Calibration	6773
10	Hydrocarbon Analyzer Calibration	7682
11	Carbon Monoxide Analyzer Calibration	7783
12	Oxides of Nitrogen Analyzer Calibration	7883
13	Carbon Dioxide Analyzer Calibration	8185
14	Calibration of Other Equipment	8286
15	Test Procedures, Overview	8286
16	Test Sequence, General Requirements	8287
17	Engine Preparation	8387
18	Engine Preconditioning	8388
19	Dynamometer Procedure	8389
20	Engine Starting and Restarting	8490
21	Dynamometer Test Runs	8590
22	Exhaust Sample Analysis	8793
23	Weighing Chamber and Microgram Balance Specifications Reserved	8894
24	Particulate Filter Handling and Weighing Reserved	8995
25	Records Required	9096
26	Calculations: Exhaust Emissions	9297
27	Calculations: Particulate Exhaust Emissions Reserved	95101

Part IV. Particulate Matter Test Procedures

Section		Page
1	Scope	105
2	Normative References	105
3	Definitions	105
4	Symbols and Abbreviations	105
5	Test Conditions	105
6	Test Fuels	106
7	Measurement Equipment and Data to be Measured	106
8	Calibration of the Analytical Instruments	106
9	Calibration of the Particulate Sampling System	106
10	Running Conditions (Test Cycles)	106
11	Test Run	106
12	Data Evaluation of Gaseous Emissions and Particulate Emissions	106
13	Calculation of Gaseous Emissions	106
14	Calculation of Particulate Emissions	106
15	Determination of the Gaseous Emissions	107
16	Determination of the Particulate Emissions	107
17	Figures and Explanations	107

CALIFORNIA EXHAUST EMISSION STANDARDS AND TEST PROCEDURES
FOR 1995 AND LATER
UTILITY AND LAWN AND GARDEN EQUIPMENT ENGINES

Part I. Emission Regulations for 1995 and Later New Lawn and Garden and Utility Equipment Engines, General Provisions.

1. General Applicability.

(a) These provisions shall be applicable to utility and lawn and garden equipment engines produced on or after January 1, 1995.

(b) Every new utility and lawn and garden equipment engine that is manufactured for sale, sold, offered for sale, introduced or delivered for introduction into commerce, or imported into California which is subject to any of the standards prescribed in these provisions is required to be covered by an Executive Order issued pursuant to these provisions.

2. Definitions.

"ARB Enforcement Officer" means any officer or employee of the Air Resources Board so designated in writing by the ~~Administrator (or by his designee)~~ Executive Officer; or by the Executive Officer's designee.

"Basic Engine" means an engine manufacturer's unique combination of engine displacement, number of cylinders, fuel system, emission control system and other engine and emission control system characteristics specified by the Executive Officer.

"Executive Order" means an order issued by the Executive Officer certifying engines for sale in California.

"Class"~~,~~ see Section 9.

"Complete Engine Assembly" or "Engine Configuration" is an assembly of a basic engine and all of the specific applicable components (e.g., air inlet, fuel and exhaust systems, etc.) and calibrations (e.g., carburetor jet size, valve timing, etc.) in order that the assembly can be installed into a new unit of equipment.

"Crankcase Emissions" means airborne substances emitted into the atmosphere from any portion of the engine crankcase ventilation or lubrication system.

"Displacement", and "Displacement Class"~~,~~ see Section 16.

"Emission Control System" includes any component, group of components, or engine modification which controls or causes the reduction of substances emitted from an engine.

"Engine Family" means the basic classification unit of a manufacturer's engines is a subclass of a basic engine based on similar emission characteristics. The engine family is the grouping of engines that is used for the purposes of certification, test fleet selection and is determined in accordance with Section 17.

"Engine Family Group" means a collection of similar diesel-cycle engine families used for the purpose of engine certification, and determined in accordance with Section 17(d).

"Engine Family Name" means a multi-character alphanumeric sequence that represents certain specific and general information about an engine family.

"Engine-Displacement-System Combination" means or an e"Engine fFamily-dDisplacement-eEmission eControl sSystem eCombination"- is a subclass of an engine family based on engine displacement and specific emission control system components, and is used for purposes of test engine selection.

"Engine Model" or "Engine Code" is a subclass of an engine-displacement-system combination on the basis of the engine calibration (e.g., carburetor jet size, valve timing, etc), and other parameters that may be designated by the Executive Officer.

"Exhaust Emissions" means substances emitted to the atmosphere from any opening downstream from the exhaust port of an off-highway vehicle.

"Fuel System" means the combination of any of the following components: fuel tank, fuel pump, fuel lines, oil injection metering system, carburetor or fuel injection components, or all fuel system vents.

"Gross Power" means the power measured at the engine crankshaft (or equivalent) and produced by an engine that is equipped with only the accessories that are necessary for engine operation.

"Hang-up" means the situation whereby hydrocarbon molecules are absorbed, condensed, or otherwise removed from the sample flow prior to the instrument detector; and any subsequent desorption of the molecules into the sample flow when such molecules are assumed to be absent.

"Intermediate Speed" means eighty-five (85) percent of rated speed.

"Incomplete Engine Assembly" is a basic engine assembly that does not include all of the components necessary for designation as a complete engine assembly, and is marketed in order to be a part of, and assembled into, a new unit of equipment.

"Lawn and Garden and Utility Engines" or "Lawn and Garden and Utility Engines and Equipment" or "Engines" are identified as: small two-stroke and four-stroke, air-cooled, liquid-cooled, gasoline and diesel and alternate powered engines under 25 horsepower (18.6 kW). They are designed for powering lawn, garden and turf maintenance implements and timber operations equipment; for generating electricity; and for pumping fluids. They are designed to be used in, but not limited to use in, the following applications: walk-behind mowers, riding mowers/lawn tractors, garden tractors, snow blowers, edge trimmers, string trimmers, blowers, vacuums, tillers, chain saws, pumps, generators, compressors, shredders, grinders, welding machines, stumpbeaters, vibrators/finishers, portable saw mills and refrigeration units, and other miscellaneous applications. All engines and equipment that fall within the scope of the preemption of Section 209(e)(1)(A) of the Federal Clean Air Act, as amended, and as defined by regulation of the Environmental Protection Agency, are specifically not included within this category.

"Off-Road Vehicle " means any non-stationary device, powered by an internal combustion engine or motor, used primarily off the highways to propel, move, or draw persons or property including any device propelled, moved, or drawn exclusively by human power, and used in any of the following applications: Marine Vessels, Construction/Farm Equipment, Locomotives, Utility and Lawn and Garden Equipment, Off-Road Motorcycles, and Off-Highway Vehicles.

"Oxides of Nitrogen" means the sum of the nitric oxide and nitrogen dioxide contained in a gas sample as if the nitric oxide were in the form of nitrogen dioxide.

"Rated Power" means the maximum brake power output (horsepower and kilowatt) of an engine as specified by an engine manufacturer.

"Rated Speed" means the engine speed (revolutions per minute [rpm]) that corresponds to the rated power output of an engine as specified by an engine manufacturer; or, when not so specified, the engine speed that corresponds to the maximum power output of an engine.

"Special Tool" means a tool or fixture specified by an engine manufacturer that is intended to perform only a specific function with respect to an engine; and the effective usage of the tool or fixture requires special expertise.

"Scheduled Maintenance" means any adjustment, repair, removal, disassembly, cleaning, or replacement of engine or equipment components or systems required by the engine manufacturer which is performed on a periodic basis to prevent part failure or equipment or engine malfunction, or anticipated as necessary to correct an overt indication of malfunction or failure for which periodic maintenance is not appropriate.

"Span gas" means a gas of known concentration which is used routinely to set the output level of any analyzer.

"Ultimate Purchaser" means, with respect to any new utility and lawn and garden equipment engines and equipment, the first person who in good faith purchases a new utility and lawn and garden equipment engine or equipment for purposes other than resale.

"Unscheduled Maintenance" means any inspection, adjustment, repair, removal, disassembly, cleaning, or replacement of components or systems which is performed to correct or diagnose an engine or engine part failure ~~or engine or equipment~~ which was not anticipated.

"Useful Life" is defined for all utility and lawn and garden equipment engines to be 2 years.

3. Abbreviations.

ARB- California Air Resources Board.
Bhp- Brake-horsepower.
Bhp-hr- Brake horsepower-hour.
C- Celsius.
cc- Cubic centimeter(s).
cfm- Cubic feet per minute.
cfh- Cubic feet per hour.
cm- Centimeter(s).
CO- Carbon monoxide.
CO_2- Carbon Dioxide.
Conc- Concentration.
cu.- Cubic.
CVS- Constant Volume Sample.
EGR- Exhaust gas recirculation.
EP- End point.
F- Fahrenheit.
g- Gram(s).
h- hour.
HC- Hydrocarbon(s).
Hg- Mercury.
Hp- Horsepower.
H_2O- Water.
in.- Inch(es)
K- Kelvin.
kg- Kilogram(s).
km- Kilometer(s).
kPa- Kilopascals.
kW - kilowatt
lb- Pound(s).
m- meter(s).
mph- Miles per hour.
mm- Milimeter(s).

N - Newton
N_2- Nitrogen.
NO_x- Oxides of nitrogen.
No.- Number.
O_2- Oxygen.
Pa- Pascals.
Pb- lead.
ppm- Parts per million by volume.
psi- Pounds per square inch.
psig- Pounds per square inch gauge.
R- Rankine.
rpm- Revolutions per minute.
wt- Weight.
°- Degree(s).
%- Percent.
PM- Particulate

4. Measurement System.

(a) These provisions ~~have been written using System International (SI) units~~ utilize the International System of Units (SI); English units are indicated for convenience. The exhaust emission standard is an exception; it is specified by units of horsepower instead of kilowatt. ~~SI units will be used to determine compliance with these regualtions. English equivalents have been indicated solely for the user's convenience.~~

5. General Standards; Increase In Emissions; Unsafe Conditions.

(a) Any emission control system installed on or incorporated in a new utility and lawn and garden equipment engine to enable such an equipment engine to conform to standards imposed by these provisions:

(1) Shall not in its operation or function cause the emission into the ambient air of any noxious or toxic substances that would not be emitted in the operation of such engine without such emission control system, except as specifically permitted by regulation; and,

(2) Shall not in its operation, function, malfunction result in any unsafe condition endangering the equipment, its user(s), or persons or property in close proximity to the equipment.

(b) Every manufacturer of new utility and lawn and garden engines subject to any of the standards imposed by these provisions shall test, or cause to be tested, engines in accordance with good engineering practice to ascertain that such test engines will meet the requirements of this Section for the useful life of the engine.

6. Defeat Devices, Prohibition.

(a) No utility and lawn and garden equipment engine shall be equipped with a defeat device.

(b) Defeat device means any element of design which:

(1) Senses temperature, engine RPM, manifold vacuum, or any other parameter for the purpose of activating, modulating, delaying or deactivating the operation of any part of the emission control system~~,~~; and~~.~~

(2) Reduces the effectiveness of the emission control system under conditions which may reasonably be expected to be encountered in normal equipment operation and use, unless:

(i) Such conditions are substantially included in the test procedure~~,~~; or~~.~~

(ii) The need for the device is justified in terms of protecting the utility and lawn and garden equipment engine against damage or accident~~,~~; or~~.~~

(iii) The device does not go beyond the requirements of engine starting or warm-up.

7. [Reserved].

8. Replacement Engines.

No new engines shall be produced for sale to replace pre-1995 model equipment after January 1, 1999, unless those engines comply with the 1995 model emission standards.

9. Exhaust Emission Standards For 1995 and Later Utility and Lawn and Garden Engines.

(a) This s~~S~~ection shall be applicable to utility and lawn and garden engines produced on or after January 1, 1995.

(b) Exhaust emissions from new utility and lawn and garden equipment engines, ~~sold in this state~~ manufactured for sale, sold, offered for sale, introduced or delivered for introduction into commerce, or imported into California, shall not exceed:

Exhaust Emission Standards
(grams per brake horsepower-hour)

Calendar Year	Engine Class (1)	Hydro-carbon plus oxides of nitrogen (2)	Hydro-carbon (2)	Carbon monoxide	Oxides of nitrogen	Particulate
1995 to 1998	I	12.0	-	300	-	0.9 ~~(2)~~(3)
	II	10.0	-	300	-	0.9 ~~(2)~~(3)
	III (4)	-	220	600	4.0	-
	IV (4)	-	180	600	4.0	-
	V (4)	-	120	300	4.0	-
1999 and subsequent	I, II	3.2	-	100	-	0.25 ~~(3)~~(5)
	III, IV, V (4)	-	50	130	4.0	0.25 ~~(3)~~(5)

(1) "Class I" means utility and lawn and garden equipment engines less than 225 cc in displacement.
"Class II" means utility and lawn and garden equipment engines greater than or equal to 225 cc in displacement.
"Class III" means hand held utility and lawn and garden equipment engines less than 20 cc in displacement.
"Class IV" means hand held utility and lawn and garden equipment engines 20 cc to less than 50 cc in displacement.
"Class V" means hand held utility and lawn and garden equipment engines greater than or equal to 50 cc in displacement.

(2) The Executive Officer may allow gaseous-fueled (i.e., propane, natural gas) engine families, that satisfy the requirements of Section 20 of Part I, to certify to either the hydrocarbon plus oxides of nitrogen or hydrocarbon emission standard, as applicable, on the basis of the non-methane hydrocarbon (NMHC) portion of the total hydrocarbon emissions.

~~(2)~~(3) Applicable to all diesel-cycle engines. ~~only~~

~~(3) Applicable to all diesel and all two-stroke engines only.~~

(4) These standards may be used for engines that meet the requirements of (i) and (ii) below, and for two-stroke engines that power only snow throwers.

(i) The engine must be used in a hand-held piece of equipment. To be classified as a hand-held piece of equipment, the equipment must require its full weight to be supported by the operator in the performance of its requisite function.

(ii) The engine and equipment must require multi-positional characteristics for use (e.g. it must be capable of operating in any position, upside down, or sideways as required to complete the job).

(5) Applicable to all diesel-cycle engines, and all two-stroke engines.

(c) In 1995 and subsequent years, fire and police departments, and other entities which specialize in emergency response may purchase emergency equipment powered by a non-California certified engine ~~emergency equipment~~ only when such equipment with a California certified ~~utility~~ engine is not available. For purposes of this ~~s~~Section, a request to purchase ~~of~~ emergency equipment powered by a non-California certified ~~emergency equipment~~ engine shall be ~~requested by~~ submitted for approval ~~application~~ to the Executive Officer.

10. Maintenance and Warranty Instructions.

(a) Maintenance and warranty instructions shall conform with the requirements pursuant to Sections 2405 and 2406, Title 13, California Code of Regulations.

11. Labeling.

(a) Labeling required pursuant to Section 2404, Title 13 of the California Code of Regulations shall conform with the requirements specified therein.

12. Submission of Engine Identification Number.

(a) The manufacturer of any utility and lawn and garden equipment engine covered by an Executive Order shall furnish to the Executive Officer, at the beginning of each calendar year, information and an explanation about an engine identification number system (e.g., engine serial number) which identifies ~~whether such~~ production engine~~(s)~~ that are covered by an Executive Order.

(b) Within 30 days of receiving a ~~Upon~~ request by the Executive Officer, the manufacturer of any utility and lawn and garden equipment engine covered by an Executive Order shall~~, within 30 days,~~ identify ~~the~~ such engine~~(s) covered by the Executive Order by the engine~~ by their identification number system provided under the requirements of paragraph (a) above.

13. ~~Production Engines.~~ [Reserved].

~~(a)~~ ~~Any manufacturer obtaining certification shall supply to the Executive Officer, upon his request, a reasonable number of production engines selected by the Executive Officer which are representative of the engines, emission control systems, and fuel systems typical of production models available for sale under the order. These engines shall be supplied for testing at such time and place and for such reasonable periods as the Executive Officer may require.~~

~~(b)~~ ~~Any manufacturer obtaining certification shall notify the Executive Officer annually of the number of engines of each engine family-engine displacement-emission control system-fuel system combination produced for sale in California during the preceding year. Submission of data shall be within 60 days after the end of the calendar year. If a manufacturer cannot provide actual California sales data, it shall provide its' total production and an estimate of California sales. The manufacturer shall also provide supporting material for its' estimate.~~

14. Application For Certification.

(a) The Executive Officer may request notification, sixty (60) days prior to the initial calendar year submission of an engine manufacturer's certification application(s), of the engine manufacturer's intent to seek engine family certification (i.e., a letter of intent) so that the Executive Officer can adequately allocate resources required for reviewing such certification applications in a timely manner. Such letters of intent shall provide the engine manufacturer's best estimate of general information for the applicable calendar year certification, such as identification of each engine family, date of expected submission, etc.

~~(a)~~ (b) New lawn and garden and utility equipment engines are covered by the following:

(1) Manufacturers of new utility and lawn and garden equipment engines shall complete and submit to the Executive Officer an written application, in the English language, requesting ~~for~~ an Executive Order that ~~certifying~~ certifies such engines be issued. The engine manufacturer shall update and correct by amendment such applications whenever ~~substantive~~ changes are made to engines that are delineated in ~~to the~~ certification application ~~are made~~ (see Section 28). ~~Where possible, a~~An engine manufacturer ~~should~~ shall include within a single application for certification all engine models within ~~of~~ an engine family (see Section 17 ~~for a~~ to determine ~~definition of~~ what is an engine family ~~see Section 17)~~; ~~a description of all engines~~ The application shall describe each applicable engine model in each the engine family. ~~for which certification is required.~~ An engine manufacturer may, however, choose to apply separately for certification of part of ~~his~~ its engine production line. The selection of test engines and the computation of emission test results ~~will~~ shall be determined by the Executive Officer separately for each separate and individual engine family certification application.

(2) The certification application shall be ~~in writing~~ and signed by an authorized representative of the engine manufacturer. The certification application shall include the following:

(i) Identification and description of the engines covered by the engine family certification application; and a descriptions of the~~ir~~ ~~combustion chamber,~~ engine designs (e.g., combustion chamber, valves, etc.)~~,~~; and, identifications (i.e., part numbers) and descriptions of the emission control system and ~~devices~~ components, auxiliary emission control devices, fuel system and components, air inlet system and components, exhaust system and components, and any optional equipment. For purposes of this ~~s~~Section, "auxiliary emission control device" means any element of design which senses temperature, engine RPM, manifold vacuum, or any other parameter for the purpose of activating, modulating, delaying, or deactivating the operation of any part of the emission control system.

(ii) ~~The~~Emission control label ~~and its location~~ information as set forth in Section 11~~.~~, including actual production labels and descriptions of all applicable label attachment locations.

(iii) ~~The range of available fuel and ignition system adjustments.~~ Identification and description (i.e., range, value, etc.) of any adjustable engine parameters (e.g., idle fuel/air, ignition timing, etc.); and a description of the method used to ensure that the emission characteristics of the certification test engines remain representative of those of the production engines with respect to any adjustments of such engine parameters.

(iv) Projected California sales data ~~sufficient to enable the Executive Officer to select a test fleet representative~~ of the engine family for which certification is requested. Such estimated sales data shall include an explanation of the method used to make the estimate.

(v) A description of the ~~test~~ facility and equipment used to test the engines for certification including (~~if~~ as applicable) ~~and fuel and engine lubricants proposed to be used~~ specifications about the dynamometers, gas analyzers, data collection devices, etc.

(vi) Information about the certification test fuels and lubricants, and information about the commerically available fuels and lubricants recommended for use in the production engines.

~~(vi)~~ (vii) A description of the proposed certification test engine service accumulation (e.g., break-in) procedure and the certification test engine maintenance scheduled.

~~(vii)~~ (viii) A statement of recommended periodic and anticipated procedures for maintenance necessary to assure that the engine covered by a Executive Order conforms to the regulations. The statement must include a listing of the fuels and lubricants recommended for use by the ultimate purchaser and a description of the training program for personnel who will perform such maintenance, and the equipment required to perform such maintenance.

(3) Completed copies of the engine family certification application and of any amendments thereto, and all notifications under Sections 28 and 29 shall be submitted in such multiple copies as the Executive Officer requires.

15. Approval of Application For Certification.

(a) After a review of the complete engine family application for certification and any other information which the Executive Officer shall require, the Executive Officer shall approve the application if all the foregoing conditions are satisfied.

(b) The Executive Officer may disapprove an engine family application for certification, in whole or in part, for reasons including, but not limited to, being incompleteness, ~~inaccuracy~~ inaccurate, or providing inappropriate information regarding proposed break-in procedures, maintenance, test equipment, emission control label content or locations, test fuel or lubricant.~~,~~ and ~~incorporation of~~ It may also be disapproved if the described engines incorporate any defeat devices. ~~in equipment or engines described by the application.~~ If an engine family certification application or part thereof is rejected, the Executive Officer shall notify the engine manufacturer in writing and set forth the reasons for such rejection.

16. Engine Displacement of Utility and Lawn and Garden Equipment Engines.

(a) Engine displacements shall be calculated using nominal engine values and rounded to the nearest tenth of a cubic centimeter, in accordance with ASTM E 29-90, (August 1990), which is incorporated by reference herein.

17. Engine Families~~,~~ and Engine Family Groups.

(a) Certification ~~A~~applications submitted by engine manufacturers shall divide engines covered therein into groupings that are expected to have similar emission characteristics throughout their useful life. Each group of engines with similar emission characteristics shall be defined as a separate engine family. ~~The manufacturer shall consider the following in determining engine families.~~

(b) In order to be included within the same engine family, engines must be identical in all of the following specifications:

(1) The combustion cycle.

(2) The cooling mechanism.

(3) The cylinder block configuration (i.e., inline, vee, opposed, bore spacings, etc.).

(4) The number of cylinders.

(5) The engine displacement class~~,~~; see Section 9. Engines of different displacements that are within fifteen percent of the largest displacement may be included within the same engine family provided the engine displacement class requirement is satisfied.

(6) The method of air aspiration.

(7) The number ~~of catalytic converters~~, location, volume, and composition~~,~~ of any catalytic converters.

(8) The thermal reactor characteristics.

(9) The number of carburetors~~,~~, as applicable.
(10) The prechamber characteristics.
(11) ~~For 2 strokes, the port/cylinder scavenging design.~~ The exhaust port(s) and cylinder design of two-stroke engines.

~~(b)~~ (c) At the engine manufacturer's option, reciprocating engines identical in all the ~~respects~~ specifications listed in paragraph ~~(a)~~ (b) of this ~~s~~Section may be further divided into different engine families if the Executive Officer determines that they may be expected to have different emission characteristics. This determination will be based upon consideration of factors such as:
(1) The bore and stroke.
(2) The combustion chamber configuration.
(3) The intake and exhaust timing method of actuation (i.e., poppet valve, reed valve, rotary valve, etc.).
(4) The intake and exhaust valve or port sizes, as applicable.
(5) The fuel system.
(6) The exhaust system.

(d) The Executive Officer may allow diesel-cycle engines that are expected to have similar emission characteristics throughout their useful lives to be combined into an engine family group. The Executive Officer shall base a determination of an engine family group on the displacement per cylinder instead of the cylinder block configuration. Each engine family group shall be considered a separate engine family. In order to be included within the same engine family group, diesel-cycle engines must have the same displacement per cylinder (within fifteen percent), and be identical in all of the following specifications:
(1) The combustion cycle.
(2) The cooling mechanism.
(3) The combustion chamber configuration.
(4) The fuel system.
(5) The engine displacement class: see Section 9.
(6) The method of air aspiration.
(7) The number, location and design of any exhaust gas after-treatment devices.
(8) The thermal reactor characteristics.
(9) The prechamber characteristics.
(10) The exhaust port(s) and cylinder design.

18. Test ~~Fleet~~ Engines.

(a) Test engines will be selected by the Executive Officer to represent each engine-displacement-system combination. The Executive Officer shall select the engine configuration (i.e., air inlet system, exhaust system, engine calibration, etc.) of each engine-displacement-system combination in the engine family ~~manufacturer's application which~~ that is expected to have ~~has~~ the greatest probability of exceeding the emission standards.

(b) A test engine shall be a complete engine assembly with all emission control systems and components that are specified in the certification application installed and functional for test purposes.

(c) A forced air-cooled engine family test engine shall be tested with the cooling fan installed except when the Executive Officer has prescribed test procedures under the requirements of Section 20(d).

(d) Concurrent with the selection of an engine family test engine, the Executive Officer shall determine the engine parameters subject to adjustment for certification, assembly-line quality-audit and compliance tests. The Executive Officer shall also evaluate the adequacy of the limits, stops, seals, or other methods utilized to control, restrict or inhibit adjustment, and shall evaluate resultant adjustable ranges of each parameter. The Executive Officer shall notify the engine manufacturer of each determination.

(1) The Executive Officer shall consider an engine parameter to be subject to adjustment if the parameter is capable of adjustment and the adjustment may significantly affect emissions.

(2) In order to determine if an engine parameter is subject to adjustment, the Executive Officer shall consider the in-use probability that the parameter may be changed from the values, or beyond the positions, specified in the engine family certification application (i.e., misadjustment). The Executive Officer may evaluate this probability on the basis of factors such as: ease of access to the parameter, damage to the engine or equipment that may result from an attempt to misadjust the parameter, consequence with respect to emissions of a misadjustment, information provided in the preliminary engine family application, and information obtained from any compliance-related activities that are, or may be, required.

(3) The Executive Officer shall determine an adjustable parameter to be adequately inaccessible when:

(i) The physical device that controls the adjustable parameter can be accessed only by the disassembly of the engine or equipment, and this disassembly requires the use of special tools.

(ii) Adequate deterrence to restrict access to an adjustable parameter will not be demonstrated by the necessity to remove an engine component that is routinely removed in maintenance, or that is required to be removed in order to perform an adjustment.

(iii) Adequacy of inaccessibility of an adjustable engine parameter shall be satisfied by a demonstration of one or more of the provisions listed above.

(4) The Executive Officer shall determine an adjustable parameter to be adequately controlled or restricted when:

(i) The device that controls the adjustable parameter is restricted from adjustment beyond the range or values specified in the engine family certification application.

(ii) The restriction may be circumvented only through the use of special tools.

(iii) Attempts to misadjust the parameter would result in breakage of the restrictive device and/or the parameter and thereby result in unsatisfactory engine operation.

(5) The Executive Officer may also determine an adjustable parameter to be adequately controlled or restricted when:

(i) Attempts to misadjust the parameter are ineffective. For example, an adjustment beyond the values or positions specified in the engine family certification application would not alter significantly the engine performance; hence, the emission levels as projected in certification are representative of in-use engine family emissions.

(ii) Any solid-state memory devices that control or monitor emission control systems or components are protected adequately against unauthorized or inappropriate changes.

(iii) Adequacy of control or restriction of an adjustable engine parameter shall be satisfied by a demonstration of one or more of the provisions listed above.

~~(b)~~ (f) [Reserved]. ~~A manufacturer may elect to operate and test additional engines which are identical to those selected by the Executive Officer. Written notice of a commitment to operate and test additional engines shall be given to the Executive Officer prior to the start of testing and not later that 30 days following notification of the test fleet selection. Each engine must meet applicable standards.~~

~~(c)~~ (g) In lieu of testing an engine and submitting data thereon, an engine manufacturer may, with the prior written approval of the Executive Officer, submit exhaust emission data on a similar engine for which certification has previously been obtained or for which all applicable data has have previously been submitted (i.e., carry over).

19. Executive Officer's ~~Fleet.~~ Engines.

(a) The Executive Officer may require the testing of additional engines identical in all material respects to engines selected in accordance with Section 18.

20. Test Procedures, General Requirements.

~~(a) Manufacturers shall use the procedures in Section II or III; however, manufacturers shall not use the procedures specified in Section III unless specifically authorized by the Executive Officer prior to use. Engines which must comply with the particulate emission standard shall only use the procedures in Section III~~

(a) Certification testing of exhaust emissions.

(1) Engine manufacturers shall use the following:

(i) The test procedures outlined in Part II, Raw Gas Method (RGM).

(ii) Or, upon approval from the Executive Officer, the Constant Volume Sampling (CVS) test method set forth in Part III.

(2) The exhaust emission test consists of prescribed sequences of engine operating conditions to be conducted on an engine dynamometer. The exhaust gases generated during engine operation are sampled either raw or dilute (as required), and specific components are analyzed through the exhaust gas analytical system. The test is designed to measure (as applicable) the concentration of hydrocarbons (HC), carbon monoxide (CO), carbon dioxide (CO_2), oxides of nitrogen (NOx), particulate matter (PM), exhaust volume, fuel flow, and the gross power output. The measured values are weighted and used to calculate the brake-specific emissions of each pollutant (in both g/bhp-hr and g/kW-hr).

(3) The exhaust emission test uses prescribed sequences of engine operation that include three separate engine test cycles as indicated in Table 1-1 Engine Test Cycles. The three different engine test cycles (i.e., A, B and C) are specific to the particular range of engine operation of the production engines of an engine family. Test Cycles A and B each consist of one idle-speed mode and five power modes at one engine speed (i.e., either intermediate or rated, as applicable). Test Cycle C consists of one idle-speed mode and one power mode at the rated engine speed.

(b) For particulate matter (PM) testing, engine manufacturers shall use the particulate sampling test procedure specified in Part IV; or any similar procedure that has been approved by the Executive Officer.

(c) Test engines shall be assigned to one of the three test cycles as follows:

(1) A non-handheld equipment engine that is configured by the engine manufacturer to operate primarily at an intermediate speed shall be tested using Test Cycle A.

(2) A non-handheld equipment engine that is configured by the engine manufacturer to operate at only a rated speed shall be tested using Test Cycle B.

(3) A handheld equipment engine shall be tested using Test Cycle C.

~~(b)~~ (d) The Executive Officer shall prescribe emission test procedures for any utility and lawn and garden equipment engine which ~~he/she~~ the Executive Officer determines is not susceptible to satisfactory testing by the ~~procedures~~ methods set forth in the test procedures.

~~(c)~~ (e) Integrated equipment, i.e., generator sets, may be tested as ~~engines or equipment~~ in the final equipment assembly configuration. ~~t~~The engine manufacturer shall submits an alternate test procedure and supporting documentation ~~and alternate test procedure~~ to the Executive Officer, and receive Executive Officer approval prior to certification testing.

(f) The Executive Officer may allow a manufacturer of gaseous-fueled (i.e., natural gas and propane) engines to certify such engines on the basis of the non-methane hydrocarbon (NMHC) portion of the total hydrocarbon exhaust emissions. Such an allowance shall be based upon a review and acceptance by the Executive Officer of a NMHC test procedure that is proposed by the engine manufacturer.

~~(d)~~ (g) The Executive Officer may ~~amend~~ revise these procedures on a case-by-case basis when ~~the amendment~~ a request to do so is supported by data and results, or other information, showing the necessity for the ~~correction~~ revision.

TABLE 1-1. Engine Test Cycles

MODE	1	2	3	4	5	6	7	8	9	10	11
SPEED	RATED SPEED					INTERMEDIATE SPEED					IDLE
MODE POINTS -A Cycle-						1	2	3	4	5	6
LOAD PERCENT -A Cycle-						100	75	50	25	10	0
WEIGHTING [%]						9	20	29	30	7	5
MODE POINTS -B Cycle-	1	2	3	4	5						6
LOAD PERCENT -B Cycle-	100	75	50	25	10						0
WEIGHTING [%]	9	20	29	30	7						5
MODE POINTS -C Cycle-	1										2
LOAD PERCENT -C Cycle-	100										0
WEIGHTING [%]	90										10

21. ~~Break-in~~ Service Accumulation Procedures~~.~~; Test Engines.

(a) The service accumulation (i.e., break-in) procedure for ~~breaking in~~ an emission test engine shall be the procedure ~~recommended~~ specified ~~break-in period~~ by the engine manufacturer ~~as~~, and approved by the Executive Officer prior to the accumulation of hours.

(b) During the ~~break-in~~ service accumulation period, engine manufacturers shall not operate engines for a total of more than 12 hours

unless an allowance to do so is approved by the Executive Officer. Engine shutdowns shall be permitted during the operating sequence~~, but~~; however, the periods of shutdown shall not be included in the 12 hour total.

22. Scheduled Maintenance; Test Engines.

(a) Engine ~~M~~manufacturers may schedule and perform break-in maintenance on the emission test engine and its emission control and fuel systems at the same time intervals specified in the engine manufacturer's break-in maintenance instructions furnished to the ultimate purchaser.

(b) During ~~break-in~~ service accumulation, an engine manufacturer shall be restricted to inspecting, replacing, cleaning, adjusting and service of the following items ~~listed below as required~~: (1) idle speed and idle air/fuel mixture; and, (2) spark plugs. Such procedures shall be conducted in a manner consistent with service instructions and specifications provided by the engine manufacturer for use by the ultimate purchaser. Such procedures shall not render the certification test engines unrepresentative of the emission characteristics of the engine family production engines.

(c) The Executive Officer may specify, within the physically available range, the ignition timing, idle air fuel mixture and other fuel system adjustments to be used at each tune-up.

(d) Engine ~~M~~manufacturers may perform periodic changes of engine oil, and may change or service oil, air~~,~~ and fuel filters at the time intervals specified in the engine manufacturer's break-in maintenance instructions that are furnished to the ultimate purchaser.

(e) Engine ~~M~~manufacturers may request from the Executive Officer authorization to perform ~~break-in~~ service accumulation maintenance of emission control related components not specifically authorized by this ~~s~~Section, and for anticipated maintenance~~.~~. ~~Such requests must be made~~ prior to the beginning of the ~~break-in~~ service accumulation period. The Executive Officer shall approve the performance of such maintenance, if the engine manufacturer makes a satisfactory showing that the maintenance will be performed by and/or for the ultimate purchaser on engines in use and that the maintenance is reasonable and necessary.

23. Unscheduled Maintenance; Test Engines.

(a) Engine ~~M~~manufacturers shall not perform any unscheduled engine, emission control system, or fuel system adjustment, repair, removal, disassembly, cleaning, or replacement on engines without the advance approval of the Executive Officer.

(1) In the case of unscheduled maintenance the Executive Officer shall approve such maintenance if ~~he~~ the Executive Officer:

(i) Has made a preliminary determination that part failure or system malfunction, or the repair of such failure or malfunction, does not render the engine unrepresentative of engines in use, and does not require direct access to the combustion chamber, except for spark plug, fuel injection component, or removable prechamber removal or replacement; and

(ii) Has made a determination that the need for maintenance or repairs is indicated by an overt indication of malfunction such as persistent misfire, engine stall, overheating, fluid leakage, loss of oil pressure, or charge indicator warning.

(2) Emission measurements may not be used as a means of determining the need for unscheduled maintenance under paragraph (a)(1)(i) of this ~~s~~Section.

(b) Engine ~~M~~manufacturers shall perform repairs of engine components of test engines, other than the engine, emission control system, or fuel system, only as a result of part failure or with the prior approval of the Executive Officer.

(c) The Executive Officer shall be given the opportunity to verify the extent of any overt indication of part failure (e.g., misfire, stall), or an activation of an audible and/or visual signal, prior to the engine manufacturer performing any maintenance related to such overt indication or signal.

(d) Unless approved by the Executive Officer prior to use, engine manufacturers shall not use any equipment, instruments, or tools to identify malfunctioning, maladjusted, or defective engine components unless the same or equivalent equipment, instruments, or tools will be available at dealerships and other service outlets~~,~~; and:

(1) Are used in conjunction with scheduled maintenance on such components~~,~~; and,

(2) Are used subsequent to the identification of a engine malfunction, as provided in paragraph (a)(1) of this ~~s~~Section for ~~durability or~~ emission data engines.

(e) If the Executive Officer determines that part failure or system malfunction occurrence and/or repair rendered the engine unrepresentative of engines in use, the engine shall not be used as a test engine.

(f) Unless waived by the Executive Officer, complete emission tests are required before and after any engine maintenance which may reasonably be expected to affect emissions.

24. Engine Failure.

Engine ~~M~~manufacturers shall not use as a test engine any test engine which incurs major mechanical failure necessitating disassembly of the engine. This prohibition does not apply to failures which occur after completion of the ~~break-in~~ service accumulation period.

25. Data Submission.

(a) Engine Mmanufacturers shall include in the application submit the test engine emission data and results from for all emission data tests (including voided tests) that it has performed. were conducted on the test engines.

(b) The engine manufacturer shall furnish to the Executive Officer, with the submission of the information required by paragraph (a), explanations of the cause for any voideding any emission tests. The Executive Officer shall determine if voiding the test was appropriate based upon the explanation given by the engine manufacturer.

(c) When unscheduled or unanticipated maintenance is performed, the engine manufacturer shall include in the application furnish to the Executive Officer a complete record of all pertinent maintenance, including the malfunction diagnosis, the corrective action taken, and the test data obtained.

(d) A complete record of all maintenance that was performed on any test engines shall be supplied. furnished to the Executive Officer for as part of the certification application.

26. Testing by the Executive Officer.

(a) At the conclusion of break-in the service accumulation procedure and emission tests, the engine manufacturer shall submit the test engine data and results to the Executive Officer in accordance with the requirements of Section 25. After reviewing the test data and results, the Executive Officer may require conduct emission testing on the test engine(s) (i.e., confirmatory testing). to verify the engine manufacturer's test results, and to determine that the test engine emission characteristics are representative of production engines. The Executive Officer will designate where such testing shall be performed.

(b) As part of the test data and results submission, an engine manufacturer may request that the Executive Officer not conduct confirmatory testing of the test engine(s) (i.e., test-waiver request), and that the engine manufacturer's test data and results be accepted as officially representative of production engines (i.e., projected emission levels).

(c) The Executive Officer shall consider an engine manufacturer's test-waiver request by evaluating information submitted under the requirements of Section 25, information contained in the engine family application, and other certification-related information. The Executive Officer shall determine whether or not to conduct confirmatory emission testing on the basis of, but not limited to, such factors as:

(1) Marginal compliance with the applicable emission standards;

(2) Demonstrated capability of the engine manufacturer's prior certification-related activities;

(3) Use of new or different technologies that may affect engine emission characteristics, or that may not be compatible with existing procedures; and.

(4) Reasonableness of emission test data and results.

(d) Whenever the Executive Officer determines that confirmatory testing is not warranted, the engine manufacturer's test data and results shall be accepted as the official test data and results for purposes of the certification review specified in Section 27(a)(2)(i).

(e) Whenever the Executive Officer determines that confirmatory testing is warranted, the Executive Officer shall notify the engine manufacturer to submit one or more of the test engines, at such a place or places as the Executive Officer may designate, for purposes of conducting confirmatory testing. The data and results from that test shall, unless subsequently invalidated by the Executive Officer, comprise the official test engine(s) data and results for purposes of the certification review specified in Section 27(a)(2)(i).

~~(b)~~ (f) The engine manufacturer may request a retest. The results of the retest will be used to determine compliance with the applicable emission standards.

~~(c)~~ (g) If the emission test results exceed the applicable standard, the Executive Officer shall deny certification.

27. Certification.

(a) New utility and lawn and garden equipment engines produced by a manufacturer are covered by the following certification requirements:

(1) The engine manufacturer shall submit to the Executive Officer a statement that the test engine for which data have been submitted has been tested in accordance with the applicable test procedures, that it meets the requirements of such tests, and that, on the basis of such tests, it conforms to the requirements of the regulations in this ~~p~~Part. If such statements cannot be made with respect to any engine tested, the engine shall be identified, and all pertinent test data relating thereto shall be supplied.

(2) (i) If, after review of the test reports and data submitted by the engine manufacturer, data derived from any inspection carried out under Section 31, and any other pertinent data or information, the Executive Officer determines that a test engine(s) meets the requirements of Section 43013 of the California Clean Air Act and of these provisions, ~~he~~ the Executive Officer shall issue an Executive Order certifying such engine(s) except for engines covered by Section 32.

~~(ii) Such certificate shall be issued for a period to be determined by the Executive Officer, but not to exceed one calendar year,~~ The engine family certification shall be granted only for the calendar-year engine production as specified by the Executive Officer in the Executive Order; and upon such terms as ~~he~~ the Executive Officer may deem necessary

to assure that any new utility and lawn and garden equipment engine covered by the Executive eOrder will meet the requirements of these provisions.

(iii) The Executive Order shall apply to all engines within the engine family represented by the test engine and shall certify compliance with no more than one set of applicable standards.

(iv) The engine manufacturer may, at its option, proceed with any of the following alternatives with respect to engines represented by a test engine(s) determined not to be in compliance with applicable standards:

(A) Delete from the application for certification engines which were represented by the failed test engine. The Executive Officer shall then select in place of each failed engine an alternate engine chosen in accordance with the selection criteria that were employed in selecting the engine that failed; or,

(B) Repair and retest the failed engine to determine demonstrate that if it meets the applicable standards. The engine manufacturer shall then test a second engine which is in all material respects the same as the first engine, (as repaired,) shall then be operated and tested in accordance with the applicable test procedures.

(v) If the engine manufacturer does not comply with submit the required data required under sub paragraphs (2)(i), (ii) and (iii) of this paragraph Section, the Executive Officer shall deny certification.

(b) As specifically allowed by the Executive Officer, the engine manufacturer may assume the responsibility for decisions applicable to the utility engine family for which certification is sought to the same extent such authority is provided to manufacturers of new motorcycles engine manufacturers under Title 40, Code of Federal Regulations, Sections 86.416-80(d) and (e).

28. Amendments to the Application.

(a) The engine manufacturer shall inform the Executive Officer by written amendment to the certification application of any proposed changes to engines that are in production or will be produced. The Executive Officer shall, if appropriate, select a new test engine. Except as provided in Section 29, the engine manufacturer shall not institute any changes until approved by the Executive Officer.

(b) The Executive Officer shall may allow reduced testing with respect to the requirements of this Section. if it meets the requirements set forth in Section 2407, Title 13, California Code of Regulations.

29. Alternative Procedure For Notification of Additions and Changes.

(a) (1) In lieu of notifying the Executive Officer in advance that it plans to produce additional engines or a change in an engine under Section 28, a manufacturer shall notify the Executive Officer concurrently with the decision if the manufacturer determines that following the change

~~all engines affected by the addition or change will still meet applicable emission standards.~~

(a) (1) If the engine manufacturer determines that a change in an engine family model will not affect the subject engines and all such engines will continue to meet applicable emission standards, an engine maufacturer may elect to notify the Executive Officer at the time such a change is made rather than in advance as required by Section 28.

(2) Such notification shall include a full description of the addition or change and any supporting documentation provided by the engine manufacturer to support its determination that the addition or change does not cause noncompliance.

(3) The engine manufacturer's determination that the addition or change does not cause noncompliance shall be based on an engineering evaluation of the addition or change and/or testing.

(b) (1) The Executive Officer may require that additional emission testing be performed to support the engine manufacturer's original determination submitted in accordance with paragraph (a) of this ~~s~~Section.

(2) If additional testing is required, the Executive Officer shall proceed as in Section 28.

(3) If the Executive Officer R~~r~~equests additional test data, the engine manufacturer must provide such data within 30 days of the request or the engine manufacturer must rescind the addition or change immediately~~,~~ after the expiration of the 30 day period.

(4) The Executive Officer may grant additional time to complete testing if additional testing is required.

(5) If based on this additional testing or any other information, the Executive Officer determines that the engines affected by the addition or change do not meet the applicable standards, the Executive Officer shall notify the engine manufacturer to rescind the addition or change immediately upon receipt of the notification, and ~~that the manufacturers should~~ to cease selling engines affected by such addition or change.

(c) If an engine manufacturer elects to produce engines under this ~~s~~Section, the engine manufacturer, upon notification from the ARB that engines that it has produced do not meet the standards set forth herein, shall be subject to being enjoined from any further sales of such products in the State of California pursuant to Section 43017 of the Health and Safety Code. Prior to seeking to enjoin an engine manufacturer, the Executive Officer shall consider any information provided by the engine manufacturer.

30. Maintenance of Records.

(a) The manufacturer of any utility and lawn and garden equipment engine subject to any of the standards or procedures prescribed in these provisions shall establish, maintain and retain the following adequately organized and indexed records;

(1) General records.

(i) (A) Identification and description of all certification engines for which testing is required under this subpart.

(B) A description of all emission control systems which are installed on or incorporated in each certification engine.

(C) A description of all procedures used to test each certification engine.

(ii) A properly completed application, following the format prescribed by the California Air Resources Board for the appropriate year of production, shall fulfill each of the requirements set forth in ~~subsection~~ paragraph (a)(1)(i)~~.~~ of this Section.

(2) Individual records.

(i) A brief history of each utility and lawn and garden equipment engines used for certification under these provisions including:

(A) (1) In the case where a current production engine is modified for use ~~in~~ as a certification engine, a description of the process by which the engine was selected and of the modification made.

(2) In the case where the certification engine ~~for a certification engine~~ is not derived from a current production engine, a general description of the build-up of the engine (e.g., experimental heads were cast and machined according to supplied drawings, etc.).

(3) In both of the above cases, a description (as applicable) of the origin and selection process for the carburetor, fuel system, emission control system components, and exhaust aftertreatment device shall be included. The required description shall specify the steps taken to assure that the certification engine is representative of production engines with respect to its fuel system, emission control system components, exhaust aftertreatment device, or any other device or component that can reasonably be expected to influence exhaust emissions. The description shall also state that all components and/or engine construction processes, component inspection and selection techniques, and assembly techniques employed in constructing such engines are reasonably likely to be implemented for production engines, or that they are as closely analogous as practicable to planned construction and assembly processes.

(B) A complete record of all certification emission tests performed (except tests performed by ARB directly) including test results, and the date and purpose of each test, and the hours accumulated on the engine.

(C) The date of each ~~break-in~~ service accumulation procedure. ~~run, listing the hours accumulated.~~

(D) [Reserved].

(E) A record and description of all maintenance and other service performed, including the date of the maintenance or service and the reason for it.

(F) A record and description of each test performed to diagnose engine or emissions control system performance, giving the date and time of the test and the reason for it.

(G) [Reserved].

(H) A brief description of any significant events affecting the engine during the period covered by the history, including such extraordinary events as engine accidents or dynamometer runaway.

(ii) Each such history shall state the date that any of the selection or build-up activities in paragraph (a)(2)(i)(A) of this s<u>S</u>ection occurred with respect to the certification engine. The history shall be updated each time the operation status of the engine changes or additional work is performed on it.

(3) All records, other than routine emission test records, required to be maintained under these provisions shall be retained by the <u>engine</u> manufacturer for a period of six (6) years after the issuance of all Executive Orders to which they relate. Routine emission test records shall be retained by the manufacturer for a period of one (1) year after issuance of all Executive Orders to which they relate. Records may be retained as hard copy or reduced to microfilm, punch cards, etc., depending on the record retention procedures of the engine manufacturer, provided, in every case, all the information contained in the hard copy shall be retained.

31. Right of Entry.

(a) Any <u>engine</u> manufacturer ~~who has applied for certification of a new utility and lawn and garden equipment engine subject to certification test under these provisions shall~~ <u>affected by these regulations</u>, upon receipt of prior notice~~,~~ <u>shall</u> admit or cause to be admitted during operating hours any ARB Enforcement Officer <u>that has presented proper credentials</u>~~, upon presentation of credentials,~~ to any of the following:

(1) Any facility where tests or procedures or activities connected with such tests or procedures are or were performed.

(2) Any facility where any new utility and lawn and garden equipment engine is present and is being, has been, or will be tested.

(3) Any facility where a manufacturer constructs, assembles, modifies, or builds-up an engine into a certification engine that will be tested for certification.

(4) Any facility where any record or other document relating to any of the above is located.

(b) Upon admission to any facility referred to in paragraph (c)(1) of this s<u>S</u>ection, any ARB Enforcement Officer shall be allowed:

(1) To inspect and monitor any part or aspect of such procedures, activities, and testing facilities, including, but not limited to, monitoring engine preconditioning, emissions tests and break-in, maintenance, and engine ~~soak and~~ storage procedures.

(2) To verify correlation or calibration of test equipment; and<u>,</u>

(3) To inspect and make copies of any such records, designs, or other documents; and<u>,</u>

(4) To inspect and/or photograph any part or aspect of any such certification engine and any components to be used in the construction thereof.

(c) To permit an ARB determination whether production utility and lawn and garden equipment engines conform in all material respects to the design specifications which apply ~~applied~~ to those engines described in the Executive Order certifying such engines and to standards prescribed herein. Engine ~~M~~manufacturers shall, upon receipt of prior notice, admit any ARB Enforcement Officer, upon presentation of credentials, to:

(1) Any facility where any document design, or procedure relating to the translation of the design and construction of engines and emission related components described in the application for certification or used for certification testing into production engines is located or carried on; and.

(2) Any facility where any utility and lawn and garden equipment engines to be introduced into commerce are manufactured or assembled.

(3) Any California retail outlet where any utility and lawn and garden equipment engine is sold.

(d) On admission to any such facility referred to in this ~~s~~Section, any ARB Enforcement Officer shall be allowed:

(1) To inspect and monitor any aspects of such manufacture or assembly and other procedures;

(2) To inspect and make copies of any such records. documents or designs; and.

(3) To inspect and photograph any part or aspect of any such new utility and lawn and garden equipment engines and any component used in the assembly thereof that are reasonably related to the purpose of ~~his~~ the Enforcement Officer's entry.

(e) Any ARB Enforcement Officer shall be furnished by those in charge of a facility being inspected with such reasonable assistance as may be necessary to discharge any function listed in this paragraph. Each applicant for or recipient of certification is required to cause those in charge of a facility operated for its benefit to furnish such reasonable assistance without charge to the ARB irrespective of whether or not the applicant controls the facility.

(f) The duty to admit or cause to be admitted any ARB Enforcement Officer applies whether or not the applicant owns or controls the facility in question and applies both to domestic and foreign engine manufacturers and facilities. The ARB will not attempt to make any inspections which it has been informed that local law forbids. However, if local law makes it impossible to insure the accuracy of data generated at a facility, no informed judgment that an engine ~~or engine~~ is certifiable or is covered by a ~~certificate~~ an Executive Order can properly be based on ~~that~~ the data. It is the responsibility of the engine manufacturer to locate its testing and manufacturing facilities in jurisdictions where this situation will not arise.

(g) For purposes of this ~~s~~Section:

(1) "Presentation of credentials" shall mean a display of a document designating a person to be an ARB Enforcement Officer.

(2) Where engine, component, or engine storage areas or facilities are concerned, "operating hours" shall mean all times during which personnel are at work in the vicinity of the area or facility and have access to it.

(3) Where facilities or areas other than those covered by paragraph (g)(2) of this ~~s~~Section are concerned, "operating hours" shall mean all times during which an assembly line is in operation or during which testing, maintenance, break-in procedure, production or compilation of records, or any other procedure or activity is being conducted related to certification testing, translation of designs from the test stage to the production stage, or engine manufacture or assembly.

(4) "Reasonable assistance" includes, but is not limited to, providing clerical, copying, interpretation and translation services; making personnel available upon request to inform the ARB Enforcement Officer of how the facility operates and to answer questions; and performing requested emissions tests on any engine which is being, has been, or will be used for certification testing. Such tests shall be nondestructive, but may require appropriate break-in. The engine manufacturer shall be compelled to cause the personal appearance of any employee at such a facility before an ARB Enforcement Officer, upon written request from the Executive Officer for the appearance of any employee of a facility, and service of such request upon the engine manufacturer. Any such employee who has been instructed by the engine manufacturer to appear will be entitled to be accompanied, represented, and advised by counsel.

32. Denial, Revocation, or Suspension of Certification.

(a) Notwithstanding the fact that any engine(s) tested for certification may comply with the provisions set forth herein, the Executive Officer may withhold or deny the issuance of an Executive ~~e~~Order (or suspend or revoke any such ~~certificate~~ Executive Order which has been issued) with respect to any such engine(s) if:

(1) The engine manufacturer submits false or incomplete information in its application for certification; or

(2) The engine manufacturer renders inaccurate or invalid any test data which it submits pertaining to the certification or otherwise circumvents the intent of Section 43013 of the California Clean Air Act or of these provisions with respect to such engine; or.

(3) Any ARB Enforcement Officer is denied access on the terms specified in Section 31 to any facility which contains any of the following:

(i) The engine~~,~~; ~~or~~

(ii) Any components used or considered for use in its modification or build-up into a certification engine~~,~~; ~~or~~

(iii) Any production engine which is or will be claimed by the engine manufacturer to be covered by the certificate~~,~~; ~~or~~

(iv) Any step in the construction of an engine described in paragraph (c) of this ~~s~~Section~~,~~; ~~or~~

(v) Any records, documents, reports, or histories required by this Part to be kept concerning any of the above.

(4) Any ARB Enforcement Officer is denied "reasonable assistance" in examining any of the items listed in paragraph (a)(3) of this s<u>S</u>ection.

(b) The sanctions of withholding, denying, revoking, or suspending of a<u>n</u> ~~certificate~~ <u>Executive Order</u> may be imposed for the reasons in paragraph (a) of this s<u>S</u>ection only when the infraction is substantial.

(c) In any case in which a<u>n engine</u> manufacturer knowingly submits false or inaccurate information, or knowingly renders inaccurate or in valid any test data, or commits any fraudulent acts and such acts contribute substantially to the Executive Officer decision to issue an order, the Executive Officer may deem such ~~certificate~~ <u>Executive Order</u> void ab initio.

(d) In any case in which certification of an engine is proposed to be withheld, denied, revoked, or suspended under paragraph (a)(3) or (4) of this s<u>S</u>ection, and in which the Executive Officer has presented to the <u>engine</u> manufacturer involved reasonable evidence that a violation of Section 31 has occurred, the <u>engine</u> manufacturer, shall have the burden of establishing any contention to the satisfaction of the Executive Officer, that even though the violation occurred, the engine in question was not involved to such a degree that would warrant withholding, denial, revocation, or suspension of certification under either paragraph (a)(3) or (4) of this s<u>S</u>ection.

(e) Any revocation or suspension of certification under paragraph (a) of this s<u>S</u>ection shall:

(1) Extend no further then to forbid the introduction into commerce of engines previously covered by the certification which are still in the possession of the <u>engine</u> manufacturer, except in cases of such fraud or other misconduct as makes the certification invalid ab inito.

33. Adjudicatory Hearing.

Parties affected by an Executive Officer's Determination, may file for an adjudicatory hearing pursuant to Title 17, California Code of Regulations, Section 60040, et seq.~~.~~ The provisions of Title 17, California Code of Regulations, Section 60040, et seq. shall be fully applicable to filings made under these provisions.

Part II. Raw Gas Method Test Procedures

1. Purpose.

(a) The purpose of this section Part is to specify a uniform raw gas measurement (i.e., undiluted) procedure for the evaluation of exhaust emissions from small utility engines (i.e., brake power less than 18.6 kW [25 hp] and 50 in^3). Details of engine test setup and exhaust gas analysis techniques are specified with the intent of providing a uniform and reproducible method of measurement.

(b) The intent has been to allow as much flexibility as possible in the physical construction of the experimental apparatus. Therefore, only those portions of the apparatus whose operation is critical to the accurate measurement of emissions levels are prescribed in detail.

(c) Set forth below in this Part is the engine test procedure, including test sequence, for the various equipment applications in which small utility engines are used. The intent of the test procedure is to provide an understanding of the levels of exhaust emissions and does not imply that in a given equipment application, an engine would operate in all the modes outlined in the test procedure.

2. Engine Test Setup; Exhaust Gas Analytical System; Engine Parameters.

(a) Figure 2-1 illustrates a recommended engine test setup. The engine being tested should be test setup shall be instrumented so that the following variables, in addition to exhaust emission levels, parameters specified in Section 13 (as applicable) can be measured or calculated.:

a. Inlet air mass flow rate (Not recommended for two-stroke cycle engines)
b. Inlet air temperature
c. Inlet air humidity
d. Barometric pressure
e. Fuel mass flow rate
f. Engine speed
g. Engine brake torque output

(b) Exhaust Gas Analytical System. Throughout the course of a test, exhaust composition will be measured through use of an analytical train and instrumentation system which is described in detail in the sections below.

(1) The exhaust gas analytical system shall provide a continuous measurement of emission levels. Exhaust gases shall be sampled by one probe and then be split internally to the different analyzers. The schematic diagrams in Figures 2-2 and 2-3 indicate possible exhaust gas analytical systems, and serve to illustrate only the essential elements of such systems. Such systems operate as follows:

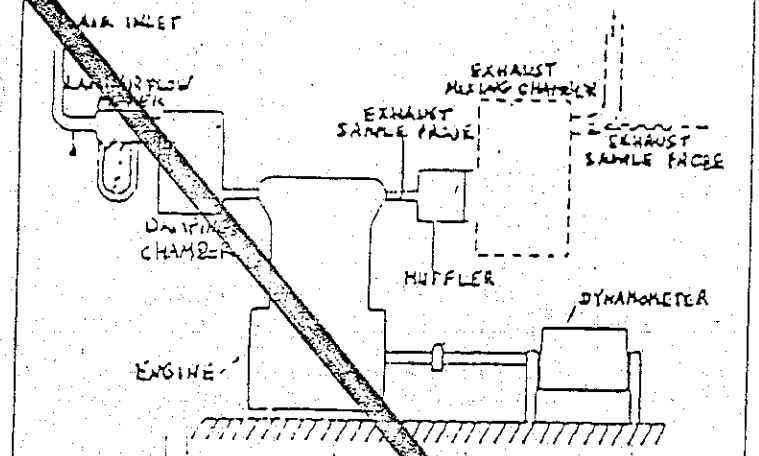

FIG. 1-ENGINE SETUP FOR EMISSIONS TESTS

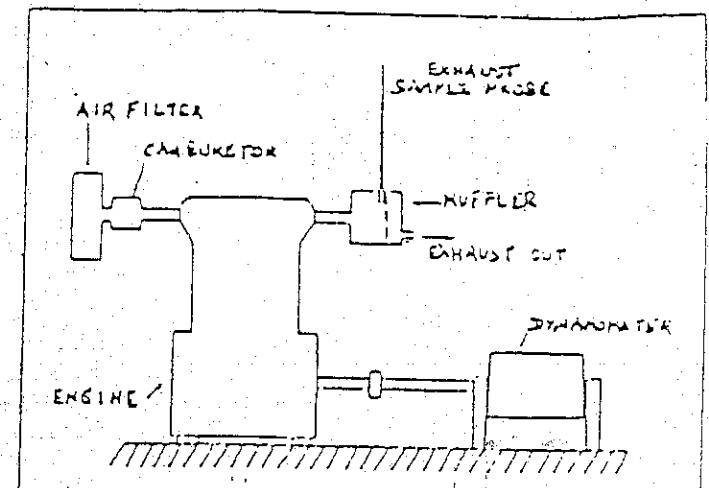

FIG 1A TWO-CYCLE ENGINE SETUP FOR EMISSIONS TESTS

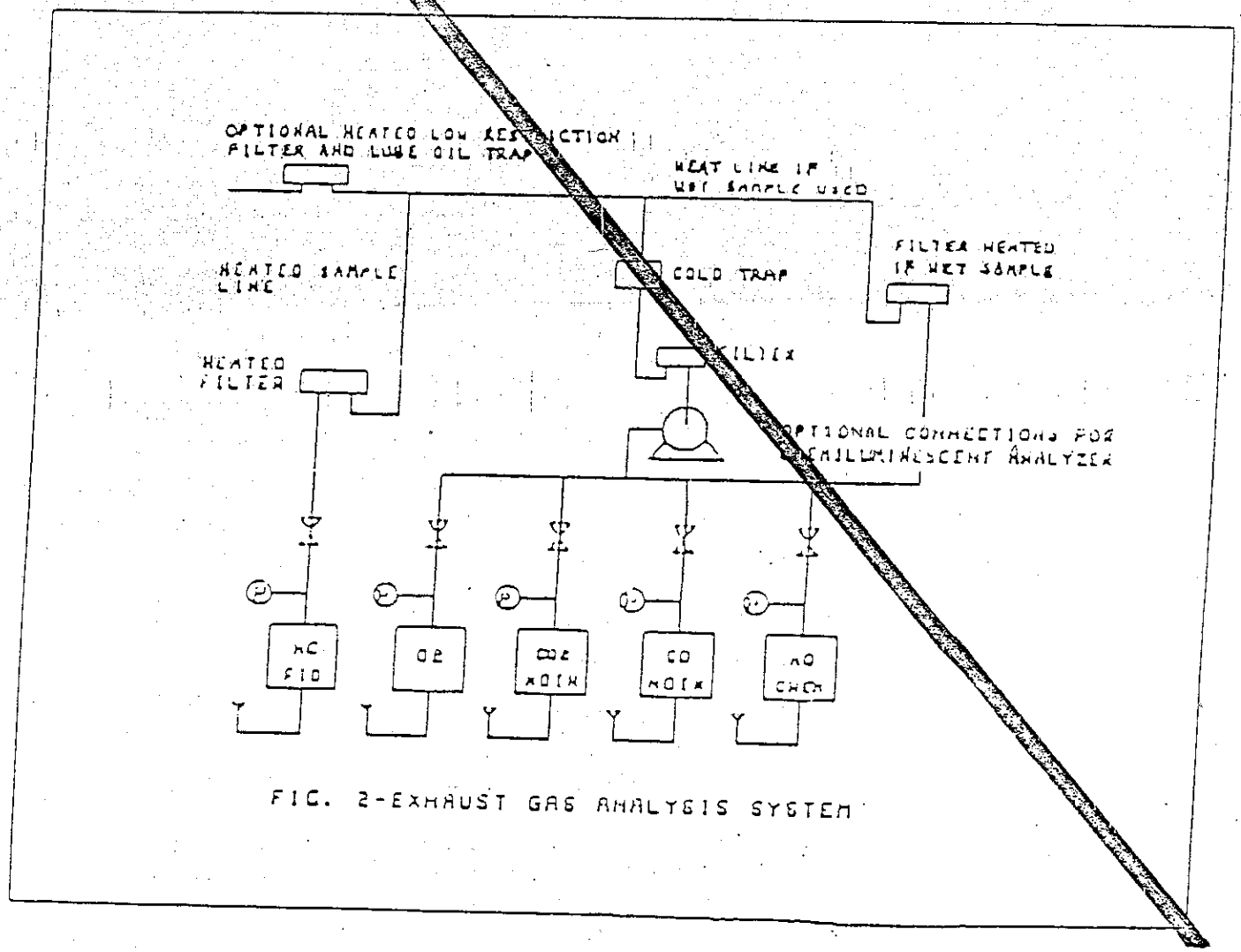

FIG. 2-EXHAUST GAS ANALYSIS SYSTEM

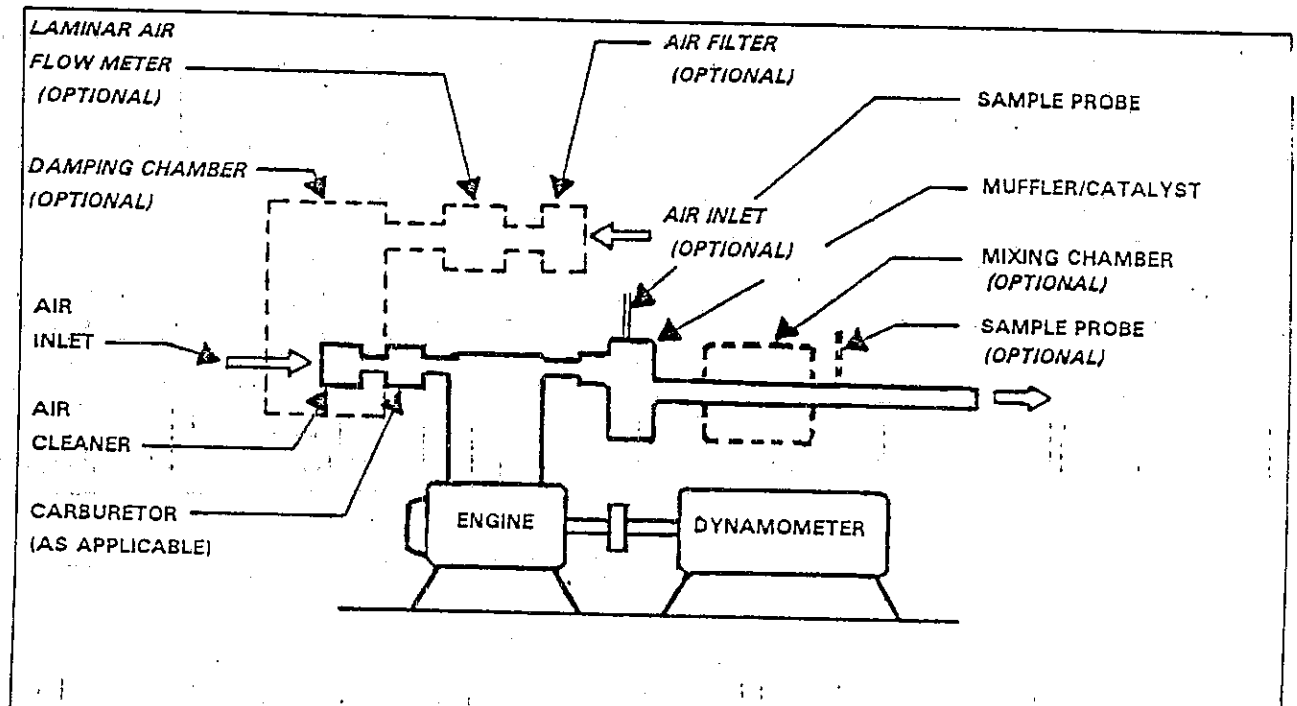

FIGURE 2-1: Engine Test Setup.

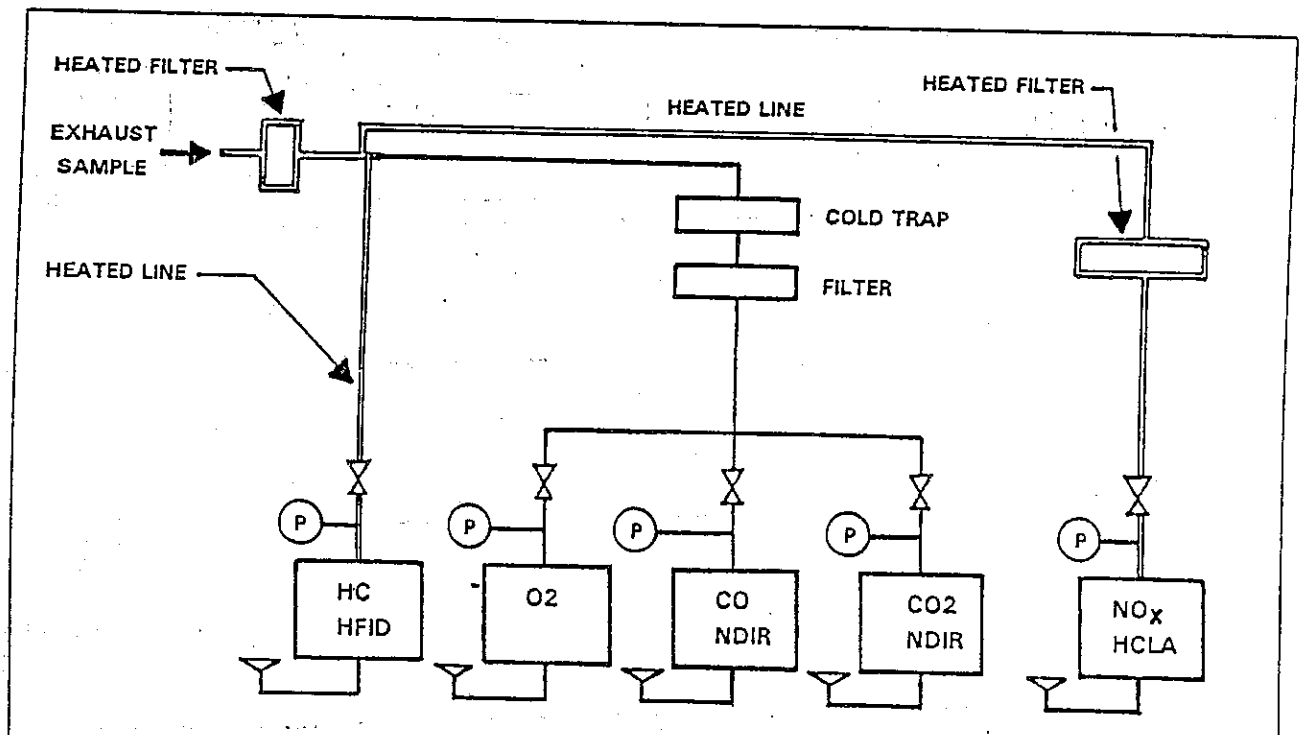

FIGURE 2-2: Exhaust Gas Analytical System with HCLA.

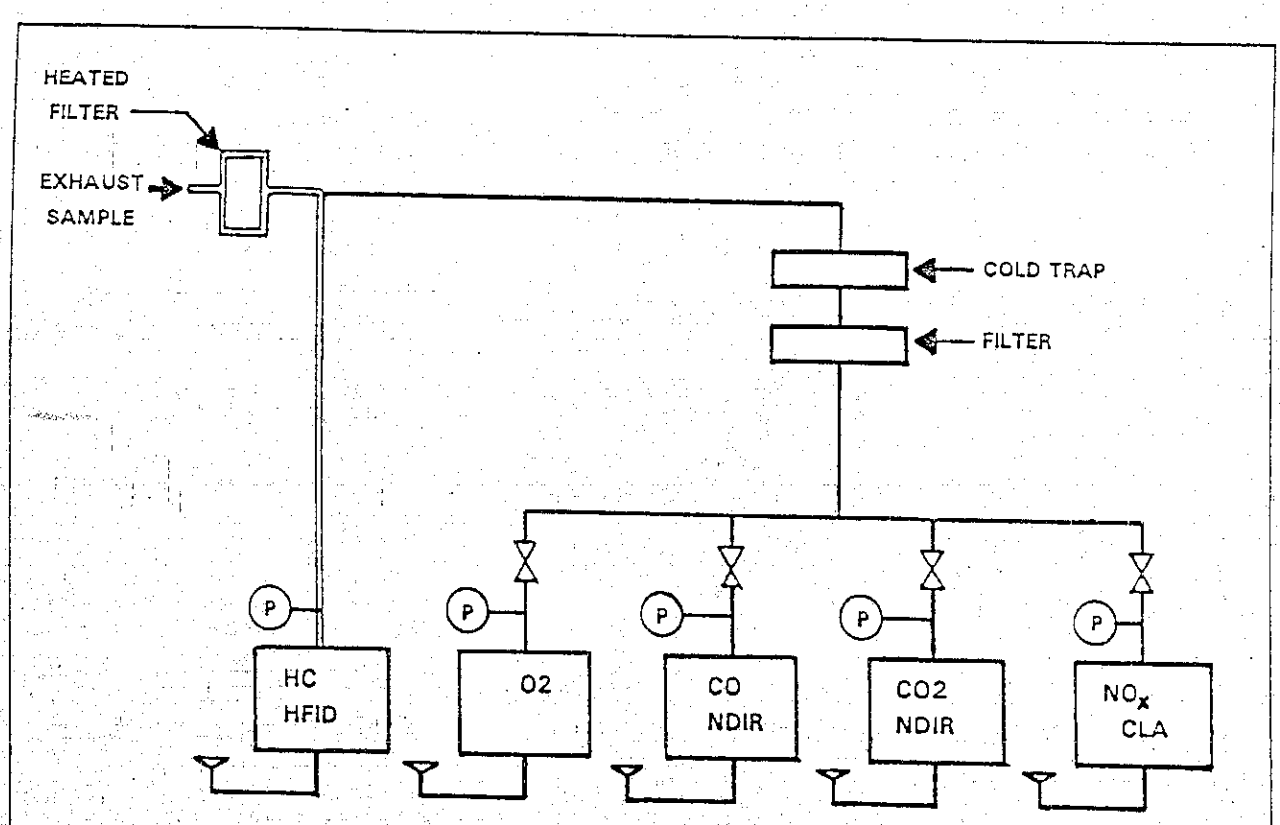

FIGURE 2-3: Exhaust Gas Analytical System with CLA.

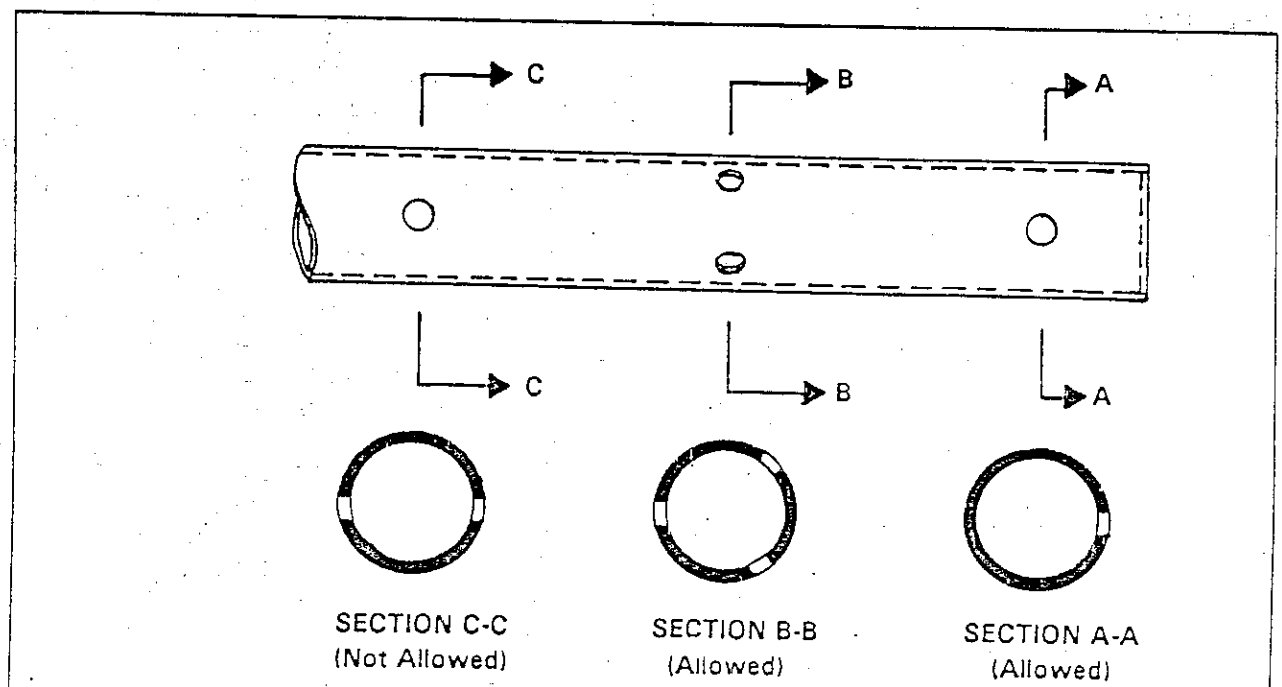

FIGURE 2-4: Exhaust Sample Probe.

(i) Exhaust gases from the sample probe are separated into two or three streams depending on the sampling requirements. One sample line passes through a heated filter and leads to a heated flame ionization detector (HFID). A second sample line passes through a water trap and a filter, and leads to a nondispersive infrared analyzer (NDIR), and a chemiluminescent analyzer (CLA) or a heated CLA (HCLA). Diaphragm pumps move the filtered, dry exhaust gases to the analytical instruments. Each analyzer inlet has a valve to meter the flow rate, and gauges to measure the pressure. Flow meters located in the exhaust of each analyzer indicate the sample flow rate.

(ii) The HFID analyzer oven temperature shall be maintained between 175 to 200 °C (347 to 392 °F).

~~(c) Suggested engine setup and exhaust gas analysis systems are illustrated in Figs. 1 and 2, respectively.~~

~~(a)~~(c) Air and Fuel Measurements.

(1) Emissions measurements are made on a molar basis, and results are given in terms of concentration. General practice at present is to quote, and emissions are reported in mass terms of mass (i.e., grams). Conversion of concentrations into mass may be based either on engine airflow or on fuel flow.; however, the fuel flow measurement is recommended for all engines. Conversion methods for air and fuel flow measurements are outlined in Section 14(c)(3); conversion methods for fuel flow measurements are outlined in Section 14(c)(4). ~~For two-stroke cycle engines it is recommended to use the Fuel Flow Method as described in 14(b)(2)(ii). Following paragraphs give recommended procedures for measuring air and fuel flow.~~

~~(1)~~(2) Inlet Air Flow Measurement.

(i) ~~Fig. 1 shows in schematic form the suggested inlet airflow measurement system.~~ The schematic test setup of Figure 2-1 indicates an optional inlet airflow measurement system. ~~The~~ This measurement system consists of a laminar flow meter used in conjunction with a pressure wave damping chamber. The damping chamber ~~may consist of any vessel having~~ has an internal volume not less than 100 times the displacement per cylinder of the engine under test. ~~A conventional drum of the type used for storage of petroleum products will be satisfactory for this purpose.~~ The damping chamber should be installed between the airflow metering element and the engine carburetor air inlet~~,~~; thus, serving to isolate the meter from the engine. Alternative airflow measurement systems may be substituted for the ~~preferred~~ system ~~prescribed above~~ shown. Such systems should adhere to the practices specified by SAE J244 (approved May 1971, ~~completely~~ revised ~~by the Automotive Emissions Committee~~ June 1983) which is incorporated by reference herein.

(ii) If the airflow element reduces the engine airflow and results in a ~~because of excessive~~ pressure drop that is, greater than ~~0.2 in H_2O or 50 Pa~~ 100 Pa (0.4 in. H_2O), an auxiliary blower can be used to compensate for the effect of the air meter. If a blower is used, engine inlet pressure should be measured and controlled to ~~+/- 0.2 in H_2O (+/- 50 Pa)~~ +/- 50 Pa (+/- 0.2 in. H_2O) of barometer readings.

(iii) The engine air inlet air flow measurement range shall be sufficient to measure accurately the air flow over the operational range of the test engine. Overall measurement accuracy shall be +/- 2 percent of full-scale value of the measurement device for all power modes; it shall be five (5) percent or less of the full-scale value of the measurement device for the idle mode. The Executive Officer shall be notified of the measurement method used prior to the test.

(iv) When an engine system incorporates devices that affect the air flow measurement (e.g., air bleeds, air injection, pulsed air, etc.) resulting in understated exhaust emission results, the exhaust emission results shall be corrected accordingly. The Executive Officer shall be notified of such corrections.

~~(2)~~(3) Fuel Flow Measurement. ~~A precision mass rate meter having an accuracy of +/- 1% of the reading shall be used.~~ The fuel flow measurement instrument shall have a minimum accuracy of +/- 1 percent of the full-scale flow rate for all power-mode measurement ranges; it shall have a minimum accuracy of +/- 5 percent of the full-scale flow rate for the idle-mode measurement range. The controlling parameters are the elapsed time measurement of the event and weight or volume measurement.

~~(b)~~(d) Exhaust Gas Sampling System.

(1) The ~~exhaust and~~ exhaust gas sampling systems consists of the exhaust system ~~normally supplied with the engine~~ configuration that is specified for the test engine, an exhaust sampling probe, and~~/or~~ an exhaust gas mixing chamber (as applicable). ~~The exhaust mixing chamber is not recommended for testing two-stroke cycle engines.~~

~~(1)~~(2) Exhaust Sample Probe.

~~(i) For four-stroke engines, the inside opening of the exhaust sampling probe shall be located in the center of the section of the exhaust conduit at a minimum 100mm (4 inches) downstream of the entrance of the exhaust conduit or the exhaust valve of the last cylinder.~~

~~The exhaust sample probe consists of a length of 6mm (1/4 inch) O.D. stainless steel tubing. The sample probe inlet should be centered in the exhaust line and face upstream as shown in Figure 1. An alternate probe design which may be used is described in SAE J215 (Approved November 1970, completely revised by the Automotive Emissions Committee January 1980), which is incorporated by reference herein.~~

(i) The sample probe shall be a straight, closed-end, stainless steel, multi-hole probe (See Figure 2-4). The inside diameter shall not be greater than the inside diameter of the sample line plus 0.3 mm (0.01 in.). The wall thickness of the probe shall not be greater than 1.0 mm (0.04 in.). The fitting that attaches the probe to the exhaust pipe shall be as small as practical in order to minimize heat loss from the probe.

(ii) The probe shall have a minimum of three holes. The radii planes of each hole shall be spaced such that equal (approximately) cross-sectional areas of the exhaust duct are covered. The angular spacing of any two holes in one plane may not be 180° +/- 20° (i.e., Section C-C of

Figure 2-4). The holes should be sized such that each has approximately the same flow. If only three holes are used, the holes cannot be in the same radial plane.

(iii) The probe shall extend radially across the exhaust duct. The probe must pass through the approximate center and must extend across at least 80 percent of the diameter of the duct.

(iv) The probe should be located in a position that yields a well-mixed, homogenous sample of the exhaust gas.

(v) The probe should be located in the high pressure side of a muffler when the probe is located in the muffler.

~~(ii) For two-stroke cycle engines, the exhaust sample probe shall be in the high pressure side of the muffler, but as far from the exhaust port as practical. Figure 1A shows in schematic form the suggested system.~~

~~(iii)~~ (vi) ~~For two-stroke cycle and four-stroke engines equipped with an exhaust catalytic converter in the muffler, it shall be necessary to locate t~~The exhaust sample probe shall be located downstream ~~from the catalytic element but not~~ an exhaust catalytic converter element when the test engine is equipped with an exhaust catalytic converter. The exhaust sample probe shall not be so close to the ~~muffler~~ exhaust outlet as to ingest air from the atmosphere due to pressure pulsations in the ~~muffler~~ exhaust.

(vii) The exhaust sample probe shall be located in the exhaust conduit downstream of the exhaust valve or exhaust port of a single-cylinder engine, or downstream of the final junction of the exhaust manifold of a multi-cylinder engine.

(viii) The exhaust sample probe shall be located in the optional location indicated in Figure 2-1 (i.e., at the exit of a mixing chamber) when the optional a mixing chamber is used in the test setup. The exhaust sample probe shall not be so close to the exhaust outlet as to ingest air from the atmosphere due to pressure pulsations in the exhaust.

(ix) The Executive Officer may allow an alternative location for an exhaust sample probe when the above criteria are not applicable to a particular test engine exhaust system. Such an alternative location shall be located in order to measure a well mixed, homogeneous exhaust gas sample.

~~(2)~~(3) Exhaust Mixing Chamber.

(i) The schematic test setup of Figure 2-1 indicates an optional mixing chamber component. ~~The exhaust mixing chamber is not recommended for two-stroke cycle engines. For four-stroke engines, t~~The exhaust mixing chamber is located in the exhaust system between the muffler and the sample probe. Its purpose is to ensure complete mixing of the engine exhaust before sample extraction so that a truly representative average exhaust sample is obtained. ~~The internal volume of the mixing chamber must be not less than 10 times the cylinder displacement of the engine under test and should be of roughly equal dimensions in height, width, and depth.~~

(ii) The internal volume of the mixing chamber shall not be less than 10 times the cylinder displacement of the engine under test. The shape of the mixing chamber shall be such that the chamber provides a

well-mixed, homogenous sample at the sample probe location. To minimize dropout of heavy hydrocarbon fractions in the exhaust mixing ~~tank~~ chamber during part throttle, light load operation, the tank size should be kept as small as practicable, consistent with the ~~10 times cylinder displacement~~ minimum size limitation. Restricting the size of the ~~tank~~ chamber will keep internal turbulence as high as possible, thus, promoting thorough mixing of the exhaust gas. The ~~tank~~ chamber should be coupled as close as possible to the engine exhaust outlet.

(iii) The exhaust line leaving the ~~tank~~ chamber should extend ~~at least 24 in (610 mm)~~ a sufficient length (e.g., 610 mm [24 in.]) beyond the sample probe location to eliminate possible sampling errors due to strong exhaust pulsations pulling air back into the exhaust system. The exhaust line should be of sufficient size to hold exhaust back pressure to a minimum.

(iv) The temperature of the inner surface of the mixing chamber ~~must~~ shall be maintained above the dew point of the exhaust gases. ~~A temperature range of 350-375 DEG. F (177-190 DEG. C) is recommended for both four cycle and two cycle engines if a mixing chamber is used.~~

(v) ~~It is suggested that surface t~~Thermocouples ~~or other suitable~~ temperature monitoring ~~devices be installed in the~~ of the mixing chamber is required to ensure operation at the ~~proper~~ temperatures specified in this Section.

(4) Sample Transfer Lines

(i) The maximum inside diameter of a sample line shall be 13.2 mm (0.52 in.).

(ii) Heated sample transfer lines shall be maintained at the same temperature range as specified for the applicable heated analyzer's oven temperature.

(iii) The sample transfer lines for the CO, CO_2 and NOx analyzers may be heated.

(5) Venting.

(i) All vents, including analyzer vents and pressure regulator vents, should be vented in such a manner as to avoid endangerment of test personnel.

(e) Any variation from the specifications in this Part II procedure, including performance specifications and emission detection methods, may be used only with the approval of the Executive Officer.

(f) Additional components, such as instruments, valves, solenoids, pumps, switches, and so forth, may be employed to provide additional information and coordinate the functions of the component systems.

3. Analytical Gases.

(a) Analyzer gases.

(1) Calibration or span ~~G~~gases for the CO and CO_2 analyzers shall be ~~single blends of CO and CO_2 respectively using~~ have zero-grade

nitrogen as the diluent. Combined CO and CO_2 span gases are permitted. Zero-grade nitrogen shall be the diluent for CO and CO_2 span gases.

(2) Calibration or span ~~G~~gases for the hydrocarbon analyzer shall be ~~single blends of propane using air~~ with zero-grade nitrogen as the diluent when testing gasoline-fueled engines. The diluent shall be zero-grade air when testing diesel-fueled engines.

(3) Calibration or span ~~G~~gases for NO_x analyzer shall be ~~single blends of~~ NO named as NO_x with a maximum NO_2 concentration of 5 percent of the nominal value using zero-grade nitrogen as the diluent.

(4) ~~Reserved~~ Zero-grade gases for hydrocarbon analyzers shall be nitrogen when testing gasoline-fueled engines and air when testing diesel-fueled engines. Zero-grade gases for the carbon monoxide, carbon dioxide and oxides of nitrogen analyzers shall be either zero-grade air or zero-grade nitrogen.

(5) The allowable zero-grade gas (air or nitrogen) impurity concentrations shall not exceed 1 ppm equivalent carbon response, 1 ppm carbon monoxide, 0.04 percent (400 ppm) carbon dioxide, and 0.1 ppm nitric oxide.

(6) "Zero-grade air" includes artificial "air" consisting of a blend of nitrogen and oxygen with oxygen concentrations between 18 and 21 mole percent.

(7) The use of proportioning and precision blending devices (i.e., gas dividers) to obtain the required analyzer gas concentrations is ~~allowable~~ allowed provided ~~their use has been approved in advance by the Executive Officer.~~ such devices are maintained in accordance with the instructions of the device manufacturer.

(b) Calibration gas. ~~Calibration gases shall be known to within +/-2 percent of the true values.~~

(1) Calibration gas values are to be derived from the National Institute for Standards and Testing's (NIST's) "Standard Reference Materials" (SRM's), and are to be single blends as follows:

(i) Mixtures of gases that have the following chemical compositions shall be available: C_3H_8 and zero-grade nitrogen; CO and zero-grade nitrogen; NOx and zero-grade nitrogen (the amount of NO_2 contained in this calibration must not exceed 5 percent of the NO content); and, CO_2 and zero-grade nitrogen.

(ii) The true concentration of a span gas must be within +/- 2 percent of the NIST gas standard. The true concentration of a calibration gas must be within +/- 1 percent of the NIST gas standard. All concentrations of calibration gas shall be given on a volume basis (volume percent or volume ppm).

(iii) When the gas concentration used for calibration and span is obtained by means of a gas divider the gas concentration shall be diluted with either zero-grade N_2 or zero-grade air (as applicable). The accuracy of the diluted gases may be determined to within +/- 2 percent.

(iv) Fuel for the HFID detector shall be a blend of 40 +/- 2 percent hydrogen with the balance as helium. The mixture must contain less than 1 ppm equivalent carbon response; 98 to 100 percent hydrogen fuel may be used with advance approval of the Executive Officer.

4. Calibrations, Frequency and Overview.

(a) Calibrations shall be performed as specified in Sections 5 through ~~10~~ 9.

(b) [Reserved].

(c) At least monthly or after any maintenance which could alter calibration, the following calibrations and checks shall be performed:

(1) Calibrate the hydrocarbon analyzer, carbon dioxide analyzer, carbon monoxide analyzer, and oxides of nitrogen analyzer (certain analyzers may require more frequent calibration depending on particular equipment and uses).

(2) Calibrate the dynamometer as specified in Section 5. ~~If the dynamometer recieves a weekly performance check (and remains within calibration), the monthly calibration need not be performed.~~

~~(d) At least weekly or after any maintenance which could alter calibration, the following calibrations and checks shall be performed:~~

~~(1) Check the oxides of nitrogen converter efficiency, if oxides of nitrogen and are measured, and~~

~~(2) Run a performance check on the dynamometer. This check may be omitted if the dynamometer has been calibrated within the preceding month.~~

~~(e)~~(d) Sample conditioning columns, if used in the CO analyzer train, should be checked at a frequency consistent with observed column life or when the indicator of the column packing begins to show deterioration.

5. Dynamometer Calibration.

(a) The dynamometer shall be calibrated at least once each month or performance verified at least once each week and then calibrated as required using the dynamometer manufacturer's method of calibration.

~~6. Exhaust Sample Preparation and Analysis~~

~~(a) A suggested analytical system which provides for continuous measurement of emissions levels is illustrated in Fig. 2. This drawing is not intended to represent a complete system. Rather, it is intended to show the essential elements of such a system.~~

~~(b) Exhaust gases from the sample probe are split into two or three streams depending upon sampling requirements. One sample line leads to the heated FID. This line should be heated to the same temperature as the detector even. 350-375 °F (177 - 190 °C) is recommended for both 2-stroke cycle and 4-stroke cycle engines. This line also should have a heated particulate filter to remove contaminants if the optional heated low restriction filter and lube trap is omitted.~~

~~(c) A second sample line leads to the NDIR analyzers. The sample passes through a cold trap, which serves to remove the water, and then through a filter. The filtered, dry exhaust gases are pumped by diaphragm~~

pumps to the analytical instruments. The inlet of each analyzer is provided with a metering valve to permit adjustment of flow rate through that instrument. Sample flow rates are indicated by flow meters placed in the exhaust of each analyzer. In addition, gages are provided for measurement of pressure at the sample inlet port of each analyzer.

(d) The following sequence of operations shall be performed in conjunction with each series of measurements for CO, CO_2, HC, and NOx:

(1) Zero the analyzers and obtain a stable zero reading. Recheck after tests.

(2) Introduce span gases and set instrument gains. In order to avoid errors, span and calibrate at the same flow rates used to analyze the test sample. Span gases should have concentrations equal to 75 to 100 percent of full scale. If gain has shifted significantly on the analyzers, check the calibrations. Show actual concentrations on chart.

(3) Check zeros; repeat the procedure in paragraphs (a) (1) and (2) of this section if required.

(4) Check flow rates and pressures.

(5) Measure HC, CO, CO_2, and, if appropriate, NOx, concentrations of samples.

(6) Check zero and span points. If difference is greater than 2 percent of full scale, repeat the procedure in paragraphs (a)(1) through (5) of this section.

7. 6. Hydrocarbon Analyzer Calibration.

(a) The HFID hydrocarbon analyzer shall receive the following initial and periodic calibration.

(b) Initial and periodic optimization of detector response. Prior to its introduction into service and at least annually thereafter, the HFID hydrocarbon analyzer shall be adjusted for optimum hydrocarbon response as specified in this Section. Alternate methods yielding equivalent results may be used, if approved in advance by the Executive Officer.

(1) Follow the analyzer manufacturer's instructions or good engineering practice for instrument startup and basic operating adjustment using the appropriate HFID fuel and zero-grade air gas specified in Section 3.

(2) Optimize on the common operating range. Introduce into the analyzer a propane in air mixture the appropriate gas mixture as specified in Section 3(a)(2), and with a propane concentration equal to approximately 90 percent of the most common operating range.

(3) Select an operating HFID fuel flow rate that will give near maximum response and least variation in response with minor fuel flow variations.

(4) To determine the optimum air flow, use the HFID fuel flow setting determined above and vary air flow.

(5) After the optimum flow rates have been determined, record them for future reference.

(c) Initial and periodic calibration. Prior to its introduction into service and monthly thereafter the HFID hydrocarbon analyzer shall be calibrated on all normally used instrument ranges. Use the same flow rate as when analyzing sample.

(1) Adjust analyzer to optimize performance.

(2) Zero the hydrocarbon analyzer with zero-grade air or zero-grade nitrogen (as applicable).

(3) Calibrate on each normally used operating range with propane in air (or nitrogen, as applicable) calibration gases having nominal concentrations of ~~15, 30, 45, 60, 75, and 90~~ 10, 20, 30, 40, 50, 60, 70, 80 and 90 percent of that range. For each range calibrated, if the deviation from a least squares best-fit straight line is 2 percent or less of the value at each data point, concentration values may be calculated by use of a single calibration factor for that range. If the deviation exceeds 2 percent at any point, the best-fit non linear equation which represents the data to within 2 percent of each test point shall be used to determine concentration.

~~8~~ 7. Carbon Monoxide Analyzer Calibration.

(a) Initial and periodic interference check. Prior to its introduction into service and annually thereafter the NDIR carbon monoxide analyzer shall be checked for response to water vapor and CO_2:

(1) Follow the analyzer manufacturer's instruction for instrument startup and operation. Adjust the analyzer to optimize performance on the most sensitive range.

(2) Zero the carbon monoxide analyzer with either zero-grade air or zero-grade nitrogen.

(3) Bubble a mixture of 3 percent CO_2 in N_2 through water at room temperature and record analyzer response.

(4) An analyzer response of more than 1 percent of full scale for ranges above 300 ppm full scale or of more than 3 ppm on ranges below 300 ppm full scale will require corrective action. (Use of conditioning columns is one form of corrective action which may be taken.)

(b) Initial and periodic calibration. Prior to its introduction into service and monthly thereafter the NDIR carbon monoxide analyzer shall be calibrated.

(1) Adjust the analyzer to optimize performance.

(2) Zero the carbon monoxide analyzer with either zero-grade air or zero-grade nitrogen.

(3) Calibrate on each normally used operating range with carbon monoxide in N_2 calibration gases having nominal concentrations of ~~15, 30, 45, 60, 75, and 90~~ 10, 20, 30, 40, 50, 60, 70, 80 and 90 percent of that range. Additional calibration points may be generated. For each range calibrated, if the deviation from a least-squares best-fit straight line is 2 percent or less of the value at each data point, concentration values may be calculated by use of a single calibration factor for that range. If the

deviation exceeds 2 percent at any point, the best-fit non-linear equation which represents the data to within 2 percent of each test point shall be used to determine concentration.

~~9.~~ 8. Oxides of Nitrogen Analyzer Calibration.

(a) Prior to its introduction into service and ~~weekly~~ monthly thereafter~~, if oxides of nitrogen are measured,~~ the chemiluminescent oxides of nitrogen analyzer shall be checked for ~~NO_2~~ NO_x to NO converter efficiency. Refer to Figure F78-8 ~~is a reference for the following steps:~~ of Section 12, Part III and perform this efficiency check as follows:

(1) Follow the analyzer manufacturer's instructions for instrument startup and operation. Adjust the analyzer to optimize performance.

(2) Zero the oxides of nitrogen analyzer with zero-grade air or zero-grade nitrogen.

(3) Connect the outlet of the NO_x generator to the sample inlet of the oxides of nitrogen analyzer which has been set to the most common operating range.

(4) Introduce into the NO_x generator analyzer-system a NO in nitrogen (N_2) mixture with a NO concentration equal to approximately 80 percent of the most common operating range. The NO_2 content of the gas mixture shall be less than 5 percent of the NO concentration.

(5) With the oxides of nitrogen analyzer in the NO mode, record the concentration of NO indicated by the analyzer.

(6) Turn on the NO_x generator O_2 (or air) supply and adjust the O_2 (or air) ~~supply and adjust the O_2 (or air)~~ flow rate so that the NO indicated by the analyzer is about 10 percent less than indicated in step 5. Record the concentration of NO in this $NO+O_2$ mixture.

(7) Switch the NO_x generator to the generation mode and adjust the generation rate so that the NO measured on the analyzer is 20 percent of that measured in step 5. There must be at least 10 percent unreacted NO at this point. Record the concentration of residual NO.

(8) Switch the oxides of nitrogen analyzer to the NO_x mode and measure total NO_x. Record this value.

(9) Switch off the NO_x generation but maintain gas flow through the system. The oxides of nitrogen analyzer will indicate the NO_x in the $NO+O_2$ mixture. Record this value.

(10) Turn off the NO_x generator O_2 (or air) supply. The analyzer will now indicate the NO_x in the original NO in N_2 mixture. This value should be no more than 5 percent above the value indicated in step 4.

(11) Calculate the efficiency of the NOx converter by substituting the concentrations obtained into the following equation:

Percent Efficiency={1+(a-b)/(c-d)}x100
where:
a=concentration obtained in step (8).
b=concentration obtained in step (9).
c=concentration obtained in step (6).
d=concentration obtained in step (7).

If converter efficiency is not greater than 90 percent corrective action will be required.

(b) Initial and periodic calibration. Prior to its introduction into service and monthly thereafter, if oxides of nitrogen are measured, the chemiluminescent oxides of nitrogen analyzer shall be calibrated on all normally used instrument ranges. Use the same flow rate as when analyzing samples. Proceed as follows:

(1) Adjust analyzer to optimize performance.

(2) Zero the oxides of nitrogen analyzer with zero-grade air or zero-grade nitrogen.

(3) Calibrate on each normally used operating range with NO in N_2 calibration gases with nominal concentrations of 50 and 100 percent of that range. Additional calibration points may be generated.

~~10.~~ 9. Carbon Dioxide Analyzer Calibration.

(a) Prior to its introduction into service and monthly thereafter the NDIR carbon dioxide analyzer shall be calibrated:

(1) Follow the analyzer manufacturer's instructions for instrument startup and operation. Adjust the analyzer to optimize performance.

(2) Zero the carbon dioxide analyzer with either zero-grade air or zero-grade nitrogen.

(3) Calibrate on each normally used operating range with carbon dioxide in N_2 calibration gases having nominal concentrations of ~~15, 30, 45, 60, 75, and 90~~ 10, 20, 30, 40, 50, 60, 70, 80 and 90 percent of that range. Additional calibration points may be generated. For each range calibrated, if the deviation from a least-squares best-fit straight line is 2 percent or less of the value at each data point, concentration values may be calculated by use of a single calibration factor for that range. If the deviation exceeds 2 percent at any point, the best-fit non-linear equation which represents the data to within 2 percent of each test point shall be used to determine concentration.

~~11.~~ 10. Test ~~Sequence~~ Conditions, General Requirements.

(a) Ambient temperature levels encountered by the test engine throughout the test sequence shall not be less than 20° C (68° F) nor more than 30° C (86° F). ~~The engine~~ Non-handheld equipment engines shall be ~~approximately~~ level during the emission test to prevent abnormal fuel distribution.

~~12. Engine Test Procedure~~

~~(a) Engine Preparation~~

~~Test the engine in the dynamometer, under mode 2 conditions, measuring fuel consumption and power before the emission measuring equipment is installed. After the emission measuring equipment is attached, the fuel~~

flow and power should be remeasured and the results must agree within +/- 5% of the results obtained before the emission measuring equipment was attached. Particular attention must be exercised during engine mounting on the dynamometer as the fuel flow and emissions may be greatly influenced by the mounting configuration.

11. Engine Fuel and Lubricant Specifications.

(1) (a) Engine Fuel Specifications.

(1) Certification Fuels.

(i) Petroleum-based fuels. The certification test fuel used for emission testing shall be consistent with the fuel specifications as outlined in the California Code of Regulations, Title 13, Section 1960.1, and the latest amendment of the "California Exhaust Emission Standards and Test Procedures for 1988 and Subsequent Model Passenger Cars, Light-Duty Trucks, and Medium-Duty Vehicles", adopted May 20, 1987 and amended July 12, 1991 and incorporated by reference herein. The test fuel specification should remain consistent from batch to batch. If a particular engine requires a higher different octane (or cetane) fuel, test records should indicate the fuel used.

(ii) Alcohol-based fuels. Alcohol-based fuels shall be allowed for emission test purposes when the appropriate emission standards with respect to such fuels are a part of these provisions. Such fuels shall be as specified in subparagraph (a)(1)(i) above.

(2) Service Accumulation Fuels.

(i) Gasoline.

(A) The engine manufacturer has the option to use a gasoline that satisfies the same fuel specifications as any of the certification test gasolines, or Unleaded gasoline representative of commercial gasoline which will be generally available through retail outlets shall be used in break-in procedures service accumulation for petroleum gasoline-fueled Otto-cycle vehicles engines. Leaded fuel shall not be used during break-in procedures service accumulation. Additional fuel requirements for break-in procedures are as follows:

(i) Engine lubricants representative of commercially available engine lubricants which will be generally available through retail outlets shall be used by manufacturers.

(ii) (B) The octane rating of the gasoline used shall be no higher than 4.0 Research eOctane nNumbers above the minimum recommended by the engine manufacturer when a certification fuel is not used for service accumulation., and shall have a minimum sensitivity of 7.5 Octane Numbers. Sensitivity is the Research Octane Number minus the Motor Octane Number.

(iii)(C) The Reid Vapor Pressure of the fuel used a gasoline shall be characteristic of the meter engine fuel during the season in which the break-in procedure service accumulation takes place.

(iv) If the manufacturer specifies several lubricants to be used by the ultimate purchaser, the Executive Officer will select one to be used.

(ii) Diesel fuel.

(A) As specified in subparagraph (a)(1)(i) of this Section.

(iii) Alternative fuels.

(A) As specified in subparagraph (a)(1)(i) of this Section.

(b) Engine ~~Lubricating Oil~~ Lubrication.

(1) Certification Test Lubricants.

(i) Engines shall use the lubricants specified by the engine manufacturer.

(ii) Two-stroke engines shall use the fuel-oil mixture ratio specified by the engine manufacturer. Emission compliance shall be demonstrated for each fuel-oil mixture ratio that is recommended to the ultimate purchaser.

(2) Service Accumulation Lubricants.

(i) Engine lubricants that are representative of commercially available engine lubricants shall be used in the engine service accumulation.

~~(3) Engine Run-In~~

~~Prior to beginning engine exhaust emission tests, the engine shall be run-in in accordance with the manufacturer's instructions. During the run-in period, the fuel and lubricants specified in paragraphs (1) and (2) must be employed.~~

12. Engine Test Procedure.

(a) Engine Pre-Test Procedures.

(1) Engine Service Accumulation and Stabilization Procedure.

(i) The procedure for stabilizing the exhaust emissions of an engine shall be the service accumulation procedure determined by the engine manufacturer, and shall be consistent with good engineering practice.

(ii) The engine manufacturer shall determine, for each engine family, the amount of time required for stabilization of the engine-displacement-system combination with respect to emission test purposes. However, this stabilization time period shall not exceed 12 hours unless an allowance to do so is approved by the Executive Officer. In the event an engine manufacturer requests approval for a stabilization time period that is greater than 12 hours, the engine manufacturer shall maintain, and provide to the Executive Officer upon request, a record of the rationale used to determine the time period required for emission control system stabilization. The engine manufacturer may elect to accumulate up to 12 hours on each test engine within an engine family without making this determination.

(iii) The appropriate fuel and lubricants specified in Section 11 of this Part shall be used in service accumulation.

(iv) Engine maintenance that is performed in service accumulation shall be conducted in accordance with Part I, Section 22.

(2) Engine Pre-Test Preparation.

(i) [Reserved].

(ii) Measure the engine's fuel consumption and the power output before and after the emission sampling equipment (including the sample probe) is installed on the engine when the engine is operated on the dynamometer at the appropriate Test Mode (see Table 1-1 Engine Test Cycles, Part I, Section 20), and as follows:

(A) Non-handheld equipment engines to be tested as per Test Cycle A shall be operated at Test Mode 6;

(B) Non-handheld equipment engines to be tested as per Test Cycle B shall be operated at Test Mode 1; and,

(C) Handheld equipment engines to be tested as per Test Cycle C shall be operated at Test Mode 1.

(iii) The emission sampling equipment shall not have a significant affect on the operational characteristics of the engine (i.e., the before and after results shall be within five (5) percent).

(3) Analyzer Pre-Test Procedures.

(i) Filter elements shall be replaced or cleaned as necessary; and the system shall be leak checked. The maximum allowable leakage rate on a vacuum side of a portion of the system is 0.5 percent of the in-use flow rate in that portion of the system. The maximum allowable leakage rate on a pressure side of a portion of the system is five (5) percent of the in-use flow rate in that portion of the system. The emission analyzers shall be stabilized as necessary prior to calibration; heated sample lines, filters and pumps shall be stabilized thermally as necessary.

(ii) Perform (as applicable) system checks, such as, sample-line temperatures, system response time, hydrocarbon hang-up, etc.

(iii) Analyzer zero and span shall be checked before and after each test cycle.

(iv) System flow rates and pressures shall be checked, and re-set as required.

~~(4) Engine Start-up~~

~~Prior to starting the emissions tests, the engine shall be warmed up in accordance to the manufacturer's instructions. Before proceeding with the tests, the carburetor and engine adjustments shall be set to the manufacturer's recommendations.~~

(b) Engine Dynamometer Test Run.

(1) Engine and Dynamometer Start-up.

(i) Only engine adjustments in accordance with Section 22 of Part I shall be allowed prior to the start of a test.

(ii) The dynamometer shall be warmed up as necessary, and as recommended by the dynamometer manufacturer; or use good engineering practice.

(iii) An engine may be operated using the engine's speed governor if the engine is so equipped, or with the throttle in a fixed position. The requirements of paragraph (d) of this Section must be satisfied.

(2) The following steps shall be conducted for each test:

(i) Record applicable data as specified in Section 13.

(ii) Spark-ignition engines shall be preconditioned by operating the engine at a power greater than or equal to 50 percent maximum power at the rated or intermediate speed (as applicable) for 20 minutes.

(iii) Diesel-cycle engines shall be preconditioned as follows:

(A) Operate the engine at idle for 2 to 3 minutes;

(B) Operate the engine at approximately 50 percent power at the maximum torque speed for 5 to 7 minutes; and,

(C) Operate the engine at rated speed and maximum power for 25 to 30 minutes.

(iv) For both spark-ignition and diesel-cycle engines, the engine service accumulation may be substituted for the engine preconditioning if such service accumulation has been occurring for at least 40 minutes prior to commencing the test cycle.

(v) The test cycle portion of the emission test (i.e., the initial thermal stabilization determination) shall begin within 5 minutes after completing the engine preconditioning.

(vi) Test modes shall be performed in the numerical order specified for the appropriate test cycle.

(vii) Determine the maximum engine torque output at the rated or intermediate engine speed, as applicable. For non-handheld engines, determine and record the torque values that correspond to 75, 50, 25 and 10 percent of the maximum engine torque output. The minimum torque capability of an engine may be substituted for the 10-percent value when a 10-percent value of the maximum engine torque output is not attainable.

(viii) Once engine speed and load are set for a particular mode, the engine shall be operated for a sufficient period of time to achieve thermal stability. The objective is to stabilize all engine parameters that affect emissions prior to the start of any emissions measurements. The method used to determine thermal stability (e.g., variation in cylinder temperature, engine oil temperature, etc.) shall be recorded.

(ix) Record continuously all modal emission data specified in Section 13 (as applicable) for a minimum of two (2) minutes and as dictated by good engineering practice in order to obtain accurate and reproducible data. The duration of time during which these data are recorded shall be labeled as the "sampling period". The data collected during the sampling period shall be used for modal emission calculations.

(x) Continuously record the analyzer's output to the exhaust gas during each mode.

(xi) A test mode may be repeated.

(xii) If a delay of more than one (1) hour occurs between the end of one mode and the beginning of another mode, the test is void and shall be re-started at paragraph (b)(1)(iv)(A) of this Section.

(xiii) If the test equipment malfunctions at any time during a test mode, the test is void and shall be aborted. Corrective action should be taken and the test re-started.

(xiv) If the engine stalls while in a test mode, the engine shall be re-started immediately and the test continued at paragraph (b)(1)(iv)(G) of this Section. If the engine is not re-started within two (2) minutes, the test shall be voided. If maintenance is required on the engine, advance approval from the Executive Officer is required as specified in Section 23 of Part I. After corrective action is taken, a test of the engine may be re-scheduled. The reason for the malfunction (if determined) and the corrective action implemented shall be recorded.

(xv) Idle-mode fuel and air flow measurements may be determined immediately before or after the dynamometer sequence or as dictated by good engineering practice.

(b) Emission Procedure

(1) Test Sequence

A sequence of selective engine operating modes shall be employed when a comprehensive mapping of exhaust emissions from a given enigne is desired. It should be understood that once an engine is coupled to the end product, it may seldom operate in some of the modes shown in Table 1. Designated emissions measurements shall be recorded in each mode. The engine shall run in a given mode for a stabilization period and three consecutive readings shall be taken at least 15 seconds apart agree within +/-5% of a central value for all measurements. The throttle must be locked in place for each specified throttle setting rather than running under a governed throttle condition. Test sequence is shown in Table 1.

Table 1

Mode	1	2	3	4	5	6	7
Speed	Idle	Rated	85% of Rated	85% of Rated	85% of Rated	85% of Rated	85% of Rated
Load	0	Full	Full	75% of Full	50% of Full	25% of Full	Mini-mum
Hand Held	10%	90%	--	--	--	--	--
Non-Hand Held	5%	--	9%	20%	29%	30%	7%

Note: Where there is no rated speed given, the speed at maximum horsepower should be used. Max governed speed is the manufacturers recommended maximum speed obtained while using a throttling governor. Terminal speed is the maximum attainable speed without any load applied to the enigne. Beam load is the load measured by the dynamometer. Full load is the maximum load which can be applied at a given condition.

(c) Exhaust Gas Measurements.

(1) Measure HC, CO, CO_2 and NOx concentrations in the exhaust sample.

(2) Each analyzer range that may be used during a test cycle shall have the zero and span response recorded prior to the execution of each test cycle. Only the range(s) used to measure the emissions during a test cycle is required to have its zero and span recorded after the completion of the test cycle. The span shall be conducted at the same flow rates used to analyze the test sample. Span gases should have concentrations of 75 to 100 percent of full scale. Actual concentrations shall be recorded.

(3) Filter elements may be replaced between modes.

(4) System leak checks may be performed between modes.

(5) A hydrocarbon hang-up check may be performed between modes.

(d) Engine Test Cycle.

(1) The appropriate six-mode test cycle for non-handheld equipment engines, and the appropriate two-mode test cycle for handheld equipment engines, shall be utilized (See Table 1-1 Engine Test Cycles; Part I, Section 20).

(2) The engine speed and load values specified in Table 1-1 Engine Test Cycles, Section 20, Part I, shall be maintained to within +/- five (5) percent for a power mode. The engine speed only shall be maintained to within +/- ten (10) percent of the engine manufacturer's specified engine idle speed for an idle mode. When a torque that is less than 0.27 Nm (0.2 lb-ft) is applied to the engine, the engine speed and load shall be maintained to the smallest tolerance that is possible within the capabilities of the test equipment and by the use of good engineering practice. Such tolerance ranges shall be determined and recorded for each test mode.

(3) The Executive Officer shall specify tolerances for engine speed and load for test purposes when such specifications are supported by test data and results, surveillance information, and other engineering information.

(e) Analyzer Post-Test Procedures.

(1) Perform a hydrocarbon hang-up check within one minute of the completion of the last mode in the test cycle.

(2) Analyzer span checks shall be commenced within six (6) minutes of the completion of the last mode in the test cycle. The zero and span response for each analyzer range used in the test cycle shall be recorded.

(3) A vacuum check shall be performed immediately after the span checks if filter elements were cleaned or replaced in the test. The results shall satisfy the specifications of Section 12(a)(3)(i) of this Part.

(4) The analyzer drift between the before- and after-test cycle span checks of each analyzer shall satisfy the requirements as follows:

(i) The span drift (i.e., the change in the difference between the zero response and the span response) shall not exceed two (2) percent of the full-scale deflection for each range used in the test.

(ii) The zero response drift shall not exceed two (2) percent of full-scale deflection for each range used above 155 ppm (or ppmC); or three (3) percent of full-scale deflection for each range below 155 ppm (or ppmC).

13. Records Required.

The following information shall be recorded (or calculated) with respect to each test:

(a) Test number.

(b) Engine or engine ~~S~~system ~~or device~~ tested (brief description).

(c) Date and time of day for each part of the test schedule.

(d) Instrument operator(s).

(e) Engine Information: ~~Make, Engine identification number, Calendar year, Engine displacement, Engine family, Emission control system, Recommended idle RPM, and Nominal fuel tank capacity.~~

(1) Engine family name.

(2) Engine identification (e.g., engine serial number, engine code, model type, etc.).

(3) Engine class.

(4) Calendar-year production.

(5) Combustion cycle.

(6) Engine displacement.

(7) Engine emission control system(s).

(8) Engine fuel(s) and lubricants.

(9) Engine fuel/oil mixture ratio (as applicable).

(10) Nominal fuel tank capacity (as applicable).

(f) Engine Test Information:

(1) Number of hours of operation accumulated on the engine prior to the start of the engine pre-test portion of the test; and after the emission test.

(2) Maximum observed torque for intermediate and rated engine speeds (as applicable) during engine pre-test.

(3) Observed engine torque and speed for each mode.

(4) Continuous record of engine torque and engine speed for each mode.

(5) Engine inlet temperature and humidity (as applicable).

(6) Fuel mass flow rate for each mode.

(7) Engine inlet air flow for each mode (as applicable).

(8) Pollutant mass flow.

(9) Exhaust mixing chamber surface temperature (as applicable).

(10) Exhaust sample line temperatures (as applicable).

(11) Ambient test environmental conditions (e.g., temperature, barometric pressure, saturation vapor pressure, absolute humidity, etc.). A

central laboratory barometer may be used for pressure measurements; however, individual test cell barometric pressures must be within +/- 0.1 percent of the barometric pressure at the central barometer location.

~~(f)~~(g) Dynamometer Information: Manufacturer, model, serial number~~:~~. As an alternative to recording ~~the dynamometer serial number~~ this information, a reference to a engine test cell number may be used, with the advance approval of the Executive Officer, provided the test cell records show the pertinent instrument information.

~~(g)~~(h) All pertinent instrument information such as tuning-, gain-, serial numbers-, detector numbers, ~~range~~ and calibration curves. As an alternative, a reference to a engine test cell number may be used, with the advance approval of the Executive Officer, provided test cell calibration records show the pertinent instrument information.

~~(h)~~(i) Recorder Charts or other data acquisition devices: ~~Identify zero, span, exhaust gas, and dilution air sample, traces.~~

(1) Record and identify for each test cycle the zero traces and span traces for each range used.

(2) Record and identify for each test mode the emission concentration traces and the associated analyzer ranges(s).

(3) Record and identify the hang-up check.

~~(i) Test cell barometric pressure, ambient temperature and humidity.~~

~~Note: A central laboratory barometer mat be used; Provided, that individual test cell barometric pressures are shown to be within +/- 0.1 percent of the barometric pressure at the central barometric location.~~

14. Data Reduction and Presentation of Results.

(a) Engine Performance. The mass emission calculations presented in this Section are specific to gasoline fuels only. Mass emission calculations for alternatively fueled engines should use a different set of constants (i.e., utilization of the molecular weight of the test fuel). The ~~following~~ engine operating and performance parameters listed in Table 2-1 Engine Test Parameters ~~should~~ shall be presented for each test in ~~the~~ SI units (English units shall be indicated~~:~~ in parentheses).

TABLE 2-1. Engine Test Parameters

Parameter	~~Units~~ English Units	SI Units
Airflow rate (dry)	lb/h	g/h
Fuel flow rate	lb/h	g/h
Engine speed	rpm	rpm
Engine torque output	lb-ft	~~N - m~~ Nm
Power output	hp	~~kW~~
Air inlet temperature	deg °F	deg °C
Air humidity	grains/lb dry air	mg/kg
Coolant temperature (water cooled)	deg °F	deg °C
Exhaust mixing chamber surface temperature	deg °F	deg °C
Exhaust sample line temperature	deg °F	deg °C
Total accumulated hours of engine operation	h	h

(b) Specific Emissions.

(1) The weighted emission rates for each individual gas component shall be calculated as follows:

$$\text{Emission Rate} = \frac{\Sigma\,(\text{Gas Mass Rate}_i) \times (WF_i)}{\Sigma\,(\text{Power}_i) \times (WF_i)}$$

where:

i ≡ 1 to n; n is the number of modes in the applicable test cycle.

Gas Mass Rate ≡ Mass emission rate for each test mode in grams per hour.

WF ≡ Weighting factor for each test mode in accordance with Table 1-1 Engine Test Cycles; Section 20, Part I.

Power ≡ Gross engine power output for each test mode.

~~(b)~~(c) Exhaust Species Concentrations.

(1) Initial Molar Concentrations. In all HC designations the C is expressed in C1. Concentrations of each of the exhaust species will be measured in the following units:

Unburned hydrocarbons (HC)	Molar ppm C1 (in wet exhaust)
CO_2	Mole percent (in dry exhaust)
CO	Mole percent (in dry exhaust)

NO	Molar ppm (in dry or wet exhaust measured by chemiluminescent analyzer)
O_2	Mole percent (in dry exhaust)

(2) Conversion to Mass Emission Rates.

(i) Conversion to mass terms should be wet specie concentration data, but care must be taken that all data are reported on the same basis. Since engine emissions are discharged to the atmosphere in the wet state, it would seem reasonable to report emissions concentrations on a wet basis. For this reason, the conversion equations given below are written for use with wet concentration data. A suggested method for converting dry concentration data into wet terms is given in Appendix A.

(ii) Two methods may be used to calculate mass rate of discharge. One method makes use of both air and fuel flow data. The other method is based upon fuel flow alone.

~~(i)~~ (3) Air and Fuel Flow Method.

(i) The following equations may be used to calculate mass emissions when the air and fuel flow method is used. Air is measured on a dry basis. Derivation of the equations is given in Appendix B. A correction for the mass effect of humidity on exhaust species concentration is not included in the equations. The error introduced by neglecting the effect of humidity is insignificant when the overall accuracy of measurement is considered and, therefore, is considered as part of the experimental error.

$$\text{HC, g/h} = \frac{0.00629}{\text{mol wt exh}} \times (\text{airflow, lb/h} + \text{fuel flow, lb/h}) \times \text{HC, ppm C1}$$

or

$$= \frac{13.85 \times 10^{-6}}{\text{mol wt exh}} \times (\text{airflow, g/h} + \text{fuel flow g/h}) \times \text{HC, ppm C1}$$

$$\text{CO, g/h} = \frac{127.00}{\text{mol wt exh}} \times (\text{airflow, lb/h} + \text{fuel flow lb/h}) \times \text{CO, \% wet}$$

or

$$= \frac{28 \times 10^{-2}}{\text{mol wt exh}} \times (\text{airflow, g/h} + \text{fuel flow, g/h}) \times \text{CO, \% wet}$$

$$NO_2,\ g/h = \frac{0.02087}{\text{mol wt exh}} \times (\text{airflow, lb/h} + \text{fuel flow, lb/h}) \times NO,\ \text{ppm wet} \times KH$$

or

$$= \frac{46 \times 10^{-6}}{\text{mol wt exh}} \times (\text{airflow, g/h} + \text{fuel flow, g/h}) \times NO,\ \text{ppm wet} \times KH$$

where:

$$\text{mol wt exh} = \frac{13.88 \times HC\ \text{ppm C}}{10^6} + \frac{28.01 \times CO\%}{10^2} + \frac{44.01 \times CO_2\%}{10^2} + \frac{46.00 \times NO_x\ \text{ppm}}{10^6} + \frac{32.00 \times O_2\%}{10^2} + \frac{2.016 \times H_2\%}{10^2} + 18.01 \times (1-K) + [28.01 \times (100 - \frac{HC\ \text{ppm C}}{10^4} - CO\% - CO_2\% \frac{NO_x}{10^4} - O_2\% - 100 \times (1-K))] / 10^2$$

KH = federal factor for correcting for the effect of humidity on NO_2 formation

$$= \frac{1}{[1 - 0.0047\ (H - 75)]}$$

where:

H = specific humidity, grains/lb of dry air at test conditions

(ii) The humidity correction factor given above was taken from the Code of Federal Regulations, 40 CFR 86.144-78. This correction factor has not been verified for small engines. Moreover, the NOx emissions for small engines are low, and the KH factor approaches one in a laboratory test environment. The KH factor for two-stroke cycle engines should be set to "1" regardless of humidity.

(iii) For stoichiometric and leaner mixtures, an exhaust molecular weight of 29 is a good approximation and the above equations reduce to the following:

$$HC, g/h = 0.000217 \times (\text{airflow, lb/h} + \text{fuel flow, lb/h}) \times HC, \text{ppm C1}$$

or

$$= 0.476 \times 10^{-6} \times (\text{airflow, g/h} + \text{fuel flow, g/h}) \times HC, \text{ppm C1}$$

$$CO, g/h = 4.38 \times (\text{airflow, lb/h} + \text{fuel flow, lb/h}) \times CO, \% \text{ wet}$$

or

$$e = 0.965 \times 10^{-3} \times (\text{airflow, g/h} + \text{fuel flow, g/h}) \times CO, \% \text{ wet}$$

$$NO_2, g/h = 0.00072 \ (\text{airflow, lb/h} + \text{fuel flow, lb/h}) \times NO, \text{ppm wet} \times KH$$

or

$$= 1.585 \times 10^{-6} \times (\text{airflow, g/h} + \text{fuel flow, g/h}) \times NO, \text{ppm wet} \times KH$$

(iv) In some cases it may not be practical to measure fuel flow. The fuel/air ratio, however, can be determined from the exhaust products using the Spindt method[1]. With this information available, the term (airflow) x (1 + F/A) may be substituted for the (airflow + fuel flow) term in the preceding equations. This substitution is valid for 4-stroke cycle engines only. It does not apply to 2-stroke cycle engines.

~~(ii)~~ (4) Fuel Flow Method[2].

(i) The following equations may be used when fuel flow is selected as a basis for mass calculations. These equations are based on the same assumptions used for the combined air and fuel method.

$$HC, g/h = 4.536 \times 10^{-2} \times HC, \text{ppm C1} \times \frac{\text{fuel consumption, lb/h}}{TC}$$

or

$$HC, g/h = 10^{-4} \times HC, \text{ppm C1} \times \frac{\text{fuel consumption, g/h}}{TC}$$

$$CO, g/h = 916.27 \times CO, \% \text{ wet} \times \frac{\text{fuel consumption, lb/h}}{TC}$$

---

1. R. S. Spindt, "Air Fuel Ratios from Exhaust Gas Analysis." SAE Transactions, Vol. 74 (1966), paper 650507.
2. Adapted from spark ignition engine emissions test procedure perpared by Off-Highway and Industrial Spark Ignition Engine Emissions Subcommittee of the Engine Manufacturers' Association Emissions Standards Committee.

or

$$= 2.02 \times CO, \% \text{ wet} \times \frac{\text{fuel consumption, g/h}}{TC}$$

$$NO_2, \text{ g/h} = 15.06 \times 10^{-2} \times NO, \text{ ppm wet} \times KH \times \frac{\text{fuel consumption, lb/h}}{TC}$$

or

$$= 3.32 \times 10^{-4} \times NO, \text{ ppm wet} \times KH \times \frac{\text{fuel consumption, g/h}}{TC}$$

where:

TC = total carbon = vol % CO_2 wet + vol % CO wet + vol % HC wet

(c) Additional Information

The following additional information should be supplied with the results of each test series:

a) Engine model, displacement, and power rating
b) Type of fuel used
c) Type of lubricant used
d) Fuel oil ratio used for 2-stroke cycle engines
e) Type of dynamometer used

APPENDIX A

(a) When FID (flame ionization detector) is used in HC analysis and a chemiluminescent analyzer utilizing a wet sample is used for NO analysis, the combustion water is not removed and therefore measurements are made with reference to the wet exhaust. When NDIR and chemiluminescent analyzer requiring a dry sample are used for species analysis, water vapor is removed prior to the concentration measurement and the results are on a dry basis. The following equation may be used to determine the correction factor to be used in converting dry measurements to a wet basis.

$$K = \frac{1}{1 + 0.005 \times (CO\% + CO_2\%) \times y - (0.01 \times H_2)}$$

where:

$$H_2 = \frac{0.5 \times y \times CO\% \times (CO\% + CO_2\%)}{(CO\% + 3) \times CO_2\%}$$

y= H/C ratio of test fuel

Therefore: Species concentration, wet= K x species concentration, dry

For two-stroke cycle engines, we assume no residual free H_2 and modify K by deleting the H_2 term.

(b) The above method does not include a correction for air humidity. The humidity contribution to the exhaust is small and may be neglected. If it is desired to include the effects of humidity, Appendix C gives the derivation of a general equation which may be used to determine the correction factor.

APPENDIX B

Derivation of Equations used for Air and Fuel Flow Method of Mass Conversion

Hydrocarbons - The exhaust unburned HC is assumed to have an average hydrogen-to-carbon ratio of 1.85/1 and a molecular weight of 13.85.

$$\text{HC, g/h} = (\text{airflow, lb/h} + \text{fuel flow, lb/h}) \times \frac{13.85}{\text{mol wt exh}}$$

$$\times \text{ HC, ppm C1} \times 10^{-6} \times 453.6 \text{ g/lb}$$

$$\text{HC, g/h} = \frac{0.00629}{\text{mol wt exh}} \times (\text{airflow, lb/h} + \text{fuel flow, lb/h}) \times \text{HC, ppm C1}$$

Carbon Monoxide- CO has a molecular weight of 28.

$$\text{CO, g/h} = (\text{airflow, lb/h} + \text{fuel flow, lb/h}) \times \frac{28}{\text{mol wt exh}}$$

$$\times \text{ CO, \%wet} \times 10^{-2} \times 453.6 \text{ g/lb}$$

$$\text{CO, g/h} = (\text{airflow, lb/h} + \text{fuel flow, lb/h}) \times \frac{127.00}{\text{mol wt exh}} \times \text{CO, \%wet}$$

Nitrogen Dioxide- In accordance with present practice, NOx mass determinations are made in terms of NO_2. Molecular weight of NO_2 is 46.

$$NO_2\text{, g/h} = (\text{airflow, lb/h} + \text{fuel flow, lb/h}) \times \frac{46}{\text{mol wt exh}}$$

$$\times \text{ NO, ppm wet} \times 10^{-6} \times 453.6 \text{ g/lb} \times \text{KH}$$

$$NO_2\text{, g/h} = (\text{airflow, lb/h} + \text{fuel flow, lb/h}) \times \frac{0.02087}{\text{mol wt exh}} \times \text{NO, ppm wet} \times \text{KH}$$

Exhaust Molecular Weight- The following equation may be used to determine the molecular weight of the exhaust:

$$\text{mol wt exh} = \frac{13.88 \times \text{HC ppm C1}}{10^6} + \frac{28.01 \times \text{CO\%}}{10^2}$$

$$+ \frac{44.01 \times CO_2\%}{10^2} + \frac{46.00 \times NO_x \text{ ppm}}{10^6} + \frac{32.00 \times O_2\%}{10^2}$$

$$+ \frac{2.016 \times H_2\%}{10^2} + 18.01 \times (1-K) + [28.01 \times (100$$

$$- \frac{\text{HC ppm C1}}{10^4} - \text{CO\%} - CO_2\% - \frac{NO_x}{10^4} - O_2\% - 100 \times (1-K))]/10^2$$

For 2-stroke engines, we assume no residual free H_2 and modify K by deleting the H_2 term.

APPENDIX C

(a) This appendix outlines the development of the correct factor for converting dry data to a wet basis, accounting for the effect of both humidity and combustion water.

(b) Combustion in a gasoline engine can be approximated by the general equation:

$$CHy + nO_2 + 3.76nN_2 + mH_2O \rightarrow aCO + CO_2 + cCH_3 + dNO + eO_2 + fN_2 + (g + m)H_2O + kH_2$$

where:

n=moles of oxygen in air to engine = $\frac{a}{2} + b + \frac{d}{2} + e + \frac{g}{2}$

y=atoms of hydrogen per carbon atom = $3c + 2g + 2k$

f=moles of N_2 = $3.76n - \frac{d}{2}$

m=moles of water in 4.76n moles of air

Mass of fuel per unit time:

$$F = 12.01 + 1.008y$$

Mass of wet air per unit time:

$$A = 32n + 105.28n + 18.016m$$

Then:

$$F/A = \frac{12.01 + 1.008y}{137.28n + 18.016m}$$

If specific humidity is measured in terms of grains/pound of dry air, h, then the pounds of water in 137.28n pounds of dry air is:

$$137.28n \times 0.000143 \text{ lb/grain} \times h = 1.964 \times 10^{-2} nh, \text{ lb } H_2O$$

This must be equal to 18.016m in the equations; therefore:

$$F/A = \frac{12.01 + 1.008y}{137.28n + 1.964} \times 10^{-2}nh \quad \text{or}$$

$$\frac{12.01 + 1.008y}{n(137.28n + 1.964 \times 10^{-2}h)}$$

and $\quad m = 1.964 \times 10^{-2}nh/18.016 \text{ or } 1.09 \times 10^{-3}nh$

If F and A are measured, then n can be calculated from:

$$n = (A/F) \times \frac{12.01 + 1.008y}{137.28 + 1.964 \times 10^{-2}h}$$

Volume fraction of water in exhaust:

$$W = \frac{g + m}{a + b + c + d + e + f + k + g + m}$$

But:

$$f = 3.76n - \frac{d}{2}$$

$$n = \frac{a}{2} + b + \frac{d}{2} + e + \frac{g}{2}$$

Substituting and collecting:

$$W = \frac{g+m}{\frac{a}{2} + c + \frac{g}{2} + m + k + 4.76n}$$

But: $\quad g = \frac{y - 3c - 2k}{2} \quad$ and $\quad c = 1 - a - b$

Therefore:

$$W = \frac{\dfrac{y - 3(1 - a - b) - 2k}{2} + m}{\dfrac{y - 3(1 - a - b) - 2k}{4} + 1 - a - b + \dfrac{a}{2} + m + k + 4.76n}$$

$$W = \frac{\dfrac{y - 3(1 - a - b) - 2k}{2} + m}{\dfrac{y + 1 + a - b + 2k}{4} + m + 4.76}$$

Substituting for m

$$W = \frac{\dfrac{y - 3(1 - a - b) - 2k}{2} + 1.09 \times 10^{-3}nh}{\dfrac{y + 1 + a - b + 2k}{4} + n(4.76 + 1.09 \times 10^{-3}h)}$$

The correction factor to be applied to the dry gas values, then, is

$$CF = 1 - W$$

(c) On the lean side of stoichiometric, the amount of free hydrogen in the exhaust is small and k can be dropped. On the rich side, however, the hydrogen content can be appreciable. One source from which an estimate of the free hydrogen in the exhaust can be obtained is Chapter 10 of "Internal Combustion Engines" by E. F. Obert. It should be noted that the measured exhaust data cannot be directly substituted in the above equation. A combustion equation must be written in the form of the general equation at the beginning of this Appendix to determine the numerical values of a, b, y, and k.

(d) An alternative approach to that presented above in this Appendix is given in SAE ARP 1256, issued January 10, 1971, revised January 8, 1990 and incorporated by reference herein.

Part III. Constant Volume Sampling Test Procedures

1. [Reserved].

2. Exhaust Gas Sampling System.

(a) (1) General. The exhaust gas sampling system is designed to measure the true mass emissions of engine exhaust. In the CVS concept of measuring mass emissions, two conditions must be satisfied: the total volume of exhaust and dilution air must be measured and a continuously proportioned volume of sample must be collected for analysis. Mass emissions are determined from the sample concentration and totalized flow over the test period.

(2) [Reserved].

(3) Positive Displacement Pump. The positive displacement pump-constant volume sample (PDP-CVS), Figure F90-1, satisfies the first condition by metering at a constant temperature and pressure through the pump. The total volume is measured by counting the revolutions made by the calibrated positive displacement pump. The proportional sample are achieved by sampling at a constant flow rate.

(4) Critical Flow Venturi. The operation of the Critical Flow Venturi-Constant Volume Sampler (CFV-CVS), Figure F90-2, is based upon the principles of fluid dynamics associated with critical flow. Proportional sampling is maintained by use of small CFVs in the sample lines, which responds to the varying temperatures in the same manner as the main CFV.

(5) [Reserved].

(6) Other systems. Other sampling systems may be used if shown to yield equivalent, and if approved by the Executive Officer (e.g., a heat exchanger with the CFV-CVS or an electronic flow integrator without a heat exchanger, with the PDP-CVS).

(b) Component description, PDP-CVS. The PDP-CVS, Figure F90-1, consists of a dilution air filter and mixing assembly, heat exchanger, positive displacement pump, sampling systems including, probes and sampling lines and associated values, pressure and temperature sensors. The PDP-CVS shall conform to the following requirements:

(1) Static pressure variations at the exhaust of the engine shall remain within +/- 1.25 kPa (+/- 5.02 in. H_2O) of the static pressure variations measured during a dynamometer cycle with no connection to the exhaust. (Sampling systems capable of maintaining the static pressure to within +/- 0.25 kPa (+/- 1.00 in. H_2O) will be used by the Executive Officer if a written request substantiates the need for this closer tolerance.)

(2) The gas mixture temperature, measured at a point immediately ahead of the positive displacement pump, shall be within +/- 5° C (9° F) during the entire test. The temperature measuring system shall have an accuracy and precision of +/- 1° C (1.8° F).

(3) The pressure gauges shall have an accuracy and precision of +/- 0.4 kPa (+/- 3 mm Hg).

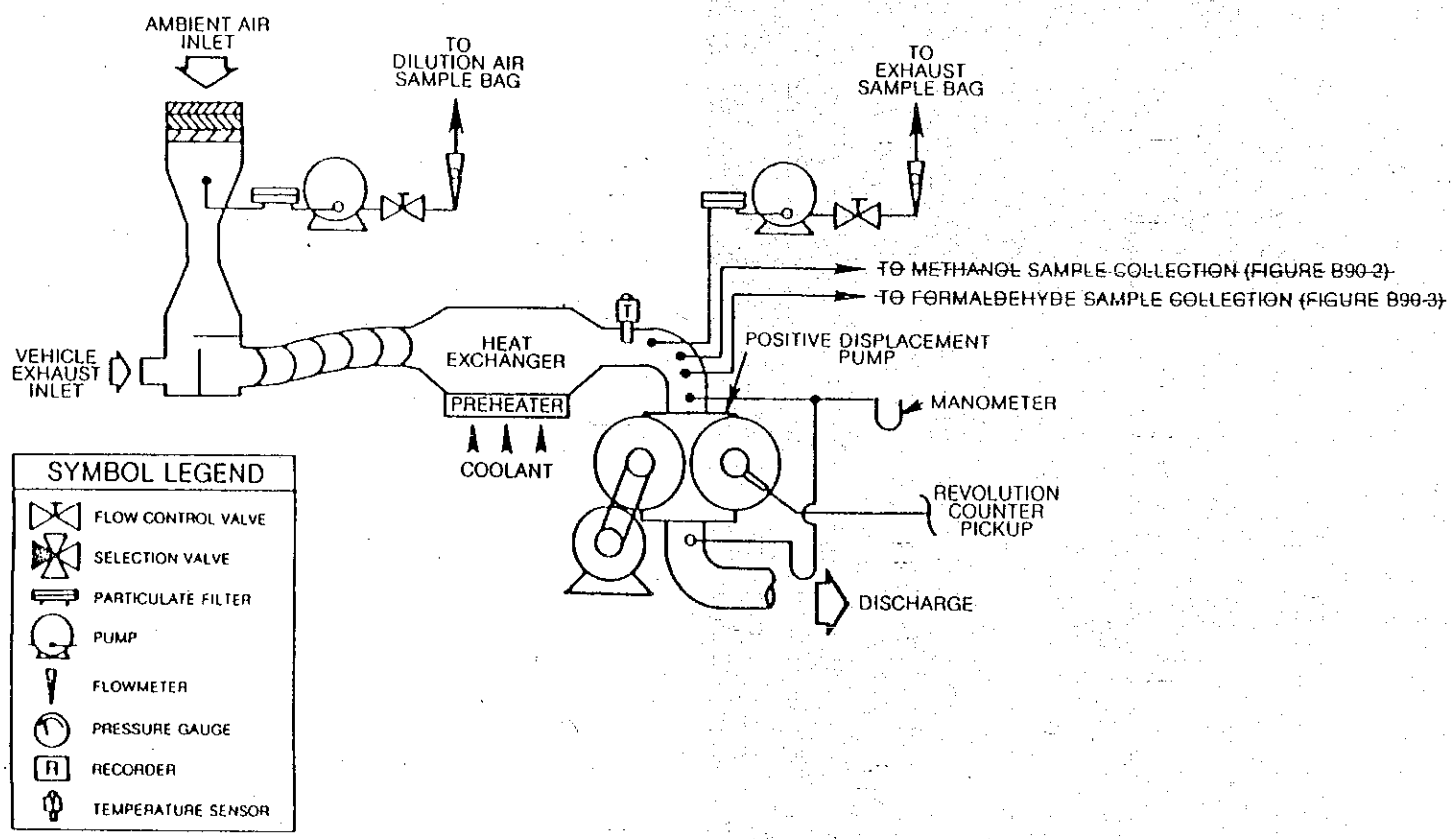

FIGURE F90-1: Exhaust Gas Sampling System (PDP-CVS).

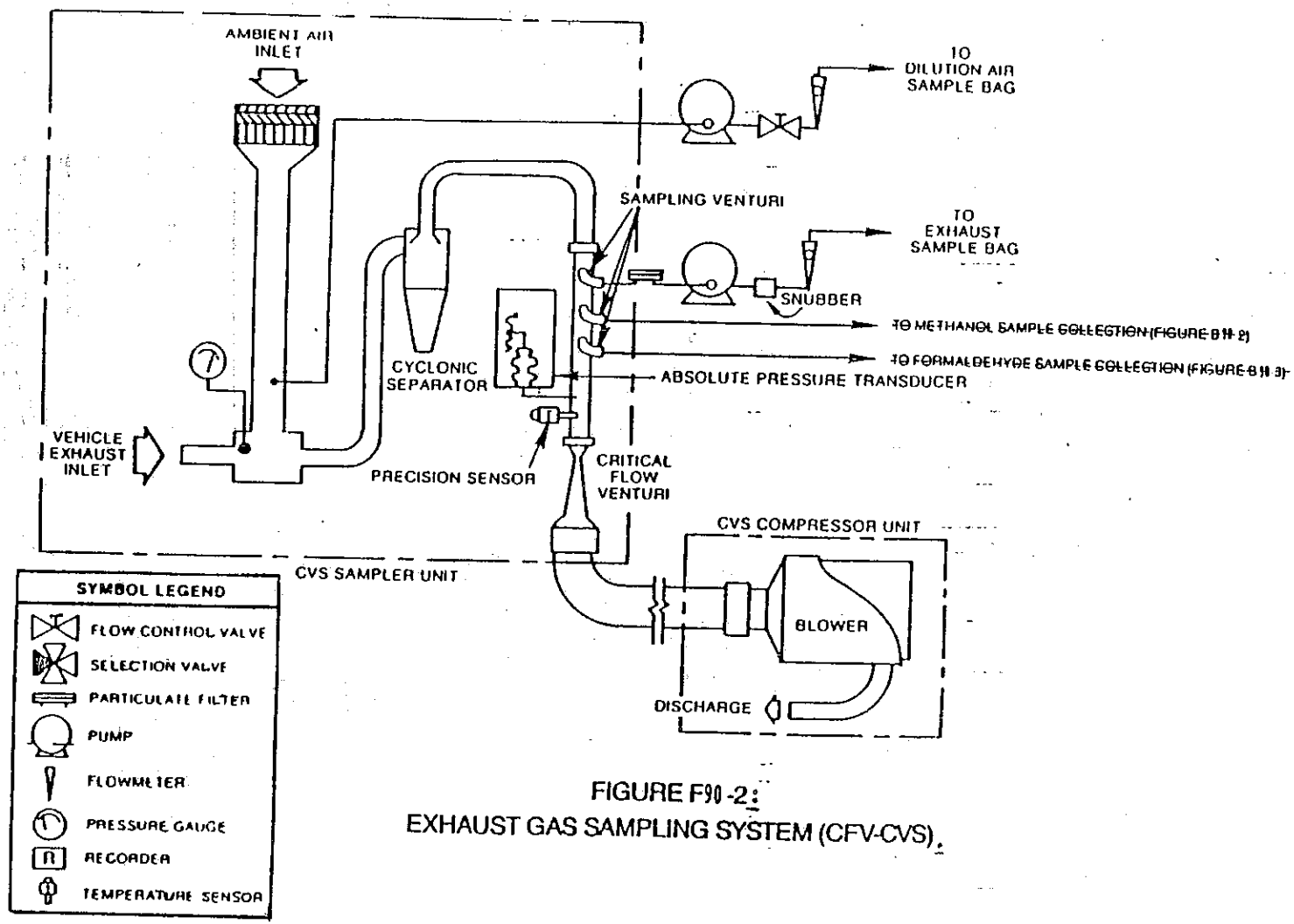

FIGURE F90-2:
EXHAUST GAS SAMPLING SYSTEM (CFV-CVS).

(4) The location of the dilution air inlet shall be placed so as to use test-cell air for dilution air and the flow capacity of the CVS shall be large enough to eliminate water condensation in the system.

(5) Sample collection bags for dilution air and exhaust samples ~~(hydrocarbon and carbon monoxide)~~ shall be of sufficient size so as to not impede sample flow.

(c) Component description, CFV-CVS. The CFV-CVS, Figure F90-2, consists of a dilution air filter and mixing assembly, cyclone particulate separator, unheated sampling venturies for the bag, critical flow venturi, and assorted valves, pressure and temperature sensors. The CFV-CVS shall conform to the following requirements:

(1) Static pressure variations at the exhaust of the engine shall remain within +/- 1.25 kPa (+/- 5.02 in. H_2O) of the static pressure variations measured during a dynamometer driving cycle with no connection to the exhaust. (Sampling systems capable of maintaining the static pressure to within +/- 0.25 kPa (+/- 1.00 in. H_2O) will be used by the Executive Officer if a written request substantiates the need for this closer tolerance.)

(2) The temperature measuring system shall have an accuracy and precision of +/- 1° C (1.8° F) and a response time of 0.100 second to 62.5 percent of a temperature change (as measured in hot silicone oil).

(3) The pressure measuring system shall have an accuracy and precision of +/- 0.4 kPa (+/- 3 mm Hg).

(4) The location of the dilution air inlet shall be placed so as to use test-cell air for dilution air and the flow capacity of the CVS shall be large enough to eliminate water condensation in the system.

(5) Sample collection bags for dilution air and exhaust samples ~~(hydrocarbon and carbon monoxide)~~ shall be of sufficient size so as to not impede sample flow.

3. Exhaust Gas Analytical System.

(a) Schematic Drawings. ~~F~~Figure F90-3 is a schematic drawing of the exhaust gas analytical system for analysis of hydrocarbons (HC), carbon monoxide (CO), carbon dioxide (CO_2), and oxides of nitrogen (NO_x). Since various configurations can produce accurate results, exact conformance with the drawing is not required. Additional components such as instruments, valves, solenoids, pumps and switches may be used to provide additional information and coordinate the functions of the component systems.

(b) Major component description. The exhaust gas analytical system for HC, CO and CO_2, Figure F90-3, consists of a flame ionization detector (FID) for the determination of hydrocarbons, nondispersive infrared analyzers (NDIR) for the determination of carbon monoxide and carbon dioxide, and~~, if oxides of nitrogen are measured~~ a chemiluminescence analyzer (CL) for the determination of oxides of nitrogen. The exhaust gas analytical system shall conform to the following requirements:

(1) The CL requires that the nitrogen dioxide present in the sample be converted to nitric oxide before analysis. Other types of

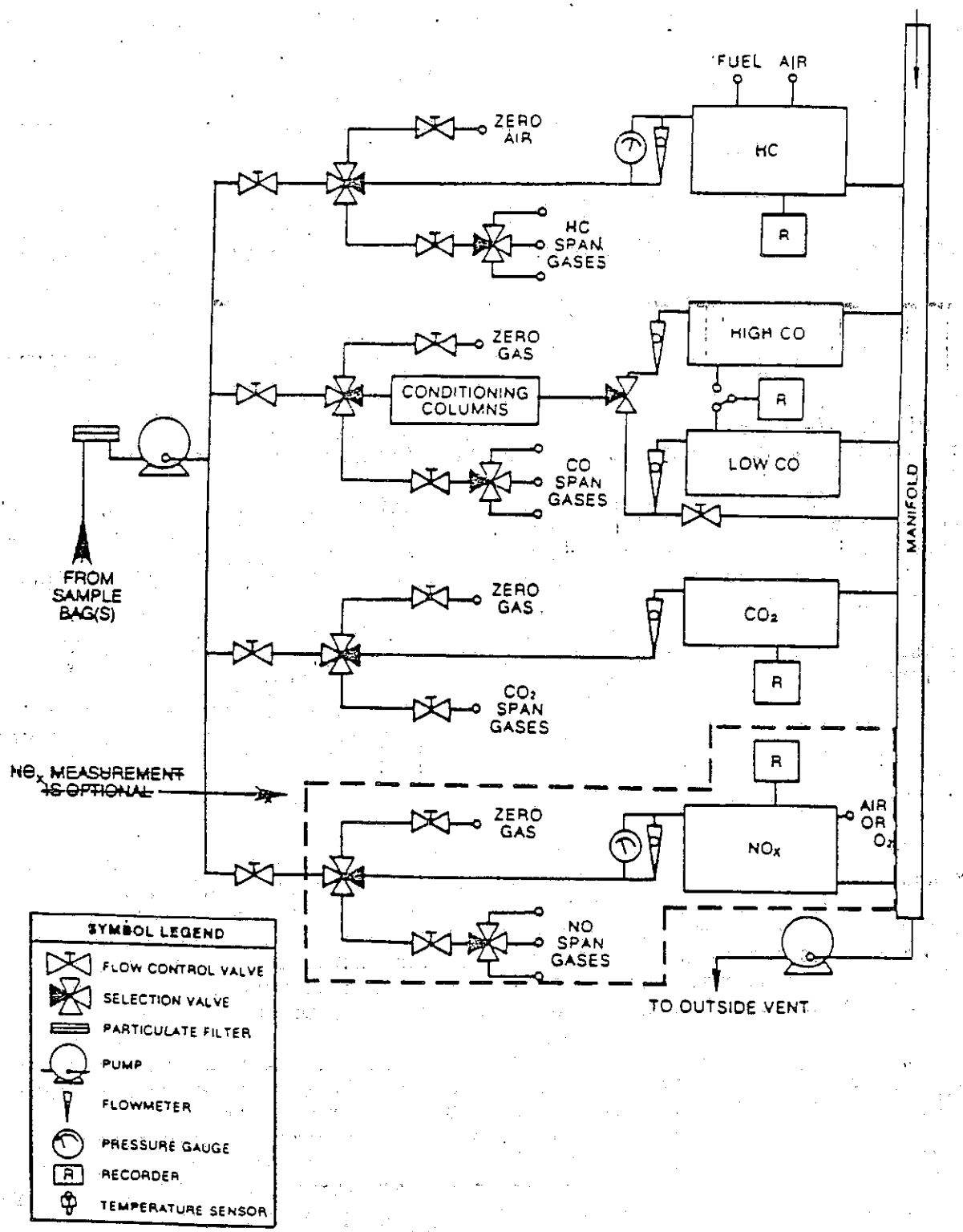

FIGURE F90-3: Exhaust Gas Analytical System.

analyzers may be used if shown to yield equivalent results and if approved in advance by the Executive Officer.

(2) The carbon monoxide (CO) NDIR analyzer may require a sample conditioning column containing $CaSO_4$, or indicating silica gel to remove water vapor and containing ascarite to remove carbon dioxide from the CO analysis stream.

(i) If CO instruments which are essentially free of CO_2 and water vapor interference are used, the use of the conditioning column may be deleted, see Sections 11 and 26.

(ii) A CO instrument will be considered to be essentially free of CO_2 and water vapor interference if its response to a mixture of 3 percent CO_2 in N_2 which has been bubbled through water at room temperature produces an equivalent CO response, as measured on the most sensitive CO range, which is less than 1 percent of full scale CO concentration on ranges above 300 ppm full scale or less than 3 ppm on ranges below 300 ppm full scale; see Section 11.

(c) Other analyzers and equipment. Other types of analyzers and equipment may be used if shown to yield equivalent results and if approved in advance by the Executive Officer.

4. Engine Fuel and Lubricant Specifications. ~~Fuel and engine lubricant specifications.~~

(a) Engine Fuel Specifications.

(1) Certification Fuels.

(i) Petroleum-based fuels. The certification test fuel used for emission testing shall be consistent with the fuel specifications as outlined in the California Code of Regulations, Title 13, Section 1960.1, and the latest amendment of the "California Exhaust Emission Standards and Test Procedures for 1988 and Subsequent Model Passenger Cars, Light-Duty Trucks, and Medium-Duty Vehicles", ~~adopted May 20, 1987 and amended July 12, 1991~~ and incorporated by reference herein. The test fuel specification should remain consistent from batch to batch. If a particular engine requires a ~~higher~~ different octane (or cetane) fuel, test records should indicate the fuel used.

(ii) Alcohol-based fuels. Alcohol-based fuels shall be allowed for emission test purposes when the appropriate emission standards with respect to such fuels are a part of these provisions. Such fuels shall be as specified in subparagraph (a)(1)(i) above.

(2) Service Accumulation Fuels.

(i) Gasoline.

(A)~~(b)~~ The engine manufacturer has the option to use a gasoline that satisfies the same fuel specifications as any of the certification test gasolines, or ~~U~~unleaded gasoline representative of commercial gasoline which will be generally available through retail outlets shall be used in ~~break-in procedures~~ service accumulation for ~~petroleum~~ gasoline-fueled ~~O~~otto-cycle ~~vehicles~~ engines. Leaded fuel shall not be used during ~~break-in procedures~~ service accumulation. ~~Additional fuel requirements for break-in procedures are as follows:~~

~~(1) Engine lubricants representative of commercially available engine lubricants which will be generally available through retail outlets shall be used by manufacturers.~~

~~(2)~~ (B) The octane rating of the gasoline used shall be no higher than 4.0 Research ~~o~~Octane ~~n~~Numbers above the minimum recommended by the engine manufacturer when a certification fuel is not used for service accumulation~~.~~, and shall have a minimum sensitivity of 7.5 octane numbers. Sensitivity is the Research Octane Number minus the Motor Octane Number.

~~(3)~~ (C) The Reid Vapor Pressure of ~~the fuel used~~ a gasoline shall be characteristic of the ~~motor~~ engine fuel during the season in which the ~~break-in procedure~~ service accumulation takes place.

~~(4) If the manufacturer specifies several lubricants to be used by the ultimate purchaser, the Executive Officer will select one to be used.~~

(ii) Diesel fuel.

(A) As specified in subparagraph (a)(1)(i) of this Section.

(iii) Alternative fuels.

(A) As specified in subparagraph (a)(1)(i) of this Section.

(b) Engine Lubrication.

(1) Certification Test Lubricants.

(i) Engines shall use the lubricants specified by the engine manufacturer.

(ii) Two-stroke engines shall use the fuel-oil mixture ratio specified by the engine manufacturer. Emission compliance shall be demonstrated for each fuel-oil mixture ratio that is recommended to the ultimate purchaser.

(2) Service Accumulation Lubricants.

(i) Engine lubricants that are representative of commercially available engine lubricants shall be used in the engine service accumulation.

5. Analytical Gases.

(a) Analyzer gases.

(1) Calibration or span ~~G~~gases for the CO and CO_2 analyzers shall be single blends of CO and CO_2 respectively using nitrogen as the diluent.

(2) Calibration or span ~~G~~gases for the hydrocarbon analyzer shall be single blends of propane using air as the diluent.

(3) Calibration or span ~~G~~gases for NO_x analyzer shall be single blends of NO named as NO_x with a maximum NO_2 concentration of 5 percent of the nominal value using nitrogen as the diluent.

(4) [Reserved].

(5) The allowable zero-grade gas (air or nitrogen) impurity concentrations shall not exceed 1 ppm equivalent carbon response, 1 ppm carbon monoxide, 0.04 percent (400 ppm) carbon dioxide, and 0.1 ppm nitric oxide.

(6) "Zero-grade air" includes artificial "air" consisting of a blend of nitrogen and oxygen with oxygen concentrations between 18 and 21 mole percent.

(7) The use of proportioning and precision blending devices (i.e., gas dividers) to obtain the required analyzer gas concentrations is allowedable provided their use has been approved in advance by the Executive Officer. such devices are maintained in accordance with the instructions of the device manufacturer.

(b) Calibration gas. Calibration gases shall be known to within +/-2 percent of the true values.

(1) Calibration gas values are to be derived from the National Institute for Standards and Testing's (NIST's) "Standard Reference Materials" (SRM's), and are to be single blends as follows:

(i) Mixtures of gases that have the following chemical compositions shall be available: C_3H_8 and zero-grade air; CO and zero-garde nitrogen; NOx and zero-grade nitrogen (the amount of NO_2 contained in this calibration must not exceed 5 percent of the NO content); and, CO_2 and zero-grade nitrogen.

(ii) The true concentration of a span gas must be within +/- 2 percent of the NIST gas standard. The true concentration of a calibration gas must be within +/- 1 percent of the NIST gas standard. All concentrations of calibration gas shall be given on a volume basis (volume percent or volume ppm).

(iii) When the gas concentration used for calibration and span is obtained by means of a gas divider the gas concentration shall be diluted with either zero-grade N_2 or zero-grade air (as applicable). The accuracy of the diluted gases may be determined to within +/- 2 percent.

(iv) Fuel for the FID detector shall be a blend of 40 +/- 2 percent hydrogen with the balance as helium. The mixture must contain less than 1 ppm equivalent carbon response; 98 to 100 percent hydrogen fuel may be used with advance approval of the Executive Officer.
he accuracy of the diluted gases may be determined to within +/- 2 percent.

(v) Oxygen interference check gases must contain propane with 350 +/- 75 ppmC hydrocarbon. The concentration value to calibration gas tolerances shall be determined by chromatographic analysis of total hydrocarbons plus impurities, or by dynamic blending. Nitrogen must be the predominant diluent with the balance oxygen.

(vi) Hydrocarbon analyzer burner air. The concentration of oxygen must be within 1 mole percent of the oxygen concentration of the burner air used in the latest oxygen interference check (percent O_2I). If the difference in oxygen concentration is greater than 1 mole percent, the oxygen interference must be checked and the analyzer adjusted (as necessary) to satisfy the percent O_2I requirements. The burner air must contain less than 2 ppmC hydrocarbon.

6. [Reserved]. Exhaust Emission Measuring Procedure.

(a) The steady-state test modes used for measuring exhaust emissions are listed in Section II(4).

7. **Calibrations, Frequency and Overview.**

(a) Calibrations shall be performed as specified in Sections 8 through 14.

(b) [Reserved].

(c) At least monthly or after any maintenance which could alter calibration, the following calibrations and checks shall be performed:

(1) Calibrate the hydrocarbon analyzer, carbon dioxide analyzer, carbon monoxide analyzer, and oxides of nitrogen analyzer (certain analyzers may require more frequent calibration depending on particular equipment and uses).

(2) Calibrate the dynamometer as specified in Section 8. ~~If the dynamometer recieves a weekly performance check (and remains within calibration), the monthly calibration need not be performed.~~

(d) At least weekly, or after any maintenance which could alter calibration, ~~the following calibrations and checks~~ a CVS system verification check shall be performed~~:~~.

~~(1) Check the oxides of nitrogen converter efficiency, if oxides of nitrogen and measured, and~~

~~(2) Perfrom a CVS system verification, and~~

~~(3) Run a performance check on the dynamometer. This check may be omitted if the dynamometer has been calibrated within the preceeding month.~~

(e) The CVS positive displacement pump or critical Flow Venturi shall be calibrated following initial installation, major maintenance or as necessary when indicated by the CVS system verification (described in Section 9).

(f) Sample conditioning columns, if used in the CO analyzer train, should be checked at a frequency consistent with observed column life or when the indicator of the column packing begins to show deterioration.

8. **Dynamometer Calibration.**

(a) The dynamometer shall be calibrated at least once each month or performance verified at least once each week and then calibrated as required using the dynamometer manufacturer's method of calibration.

9. **Constant Volume Sampler Calibration.**

(a) The CVS (Constant Volume Sampler) is calibrated using an accurate flowmeter and restrictor valve. Measurements of various parameters are made and related to flow through the unit. Procedures used by ARB for both PDP (Positive Displacement Pump) and CFV (Critical Flow Venturi) are outlined below. Other procedures yielding equivalent results may be used if approved in advance by the Executive Officer. After the calibration curve has been

obtained, verification of the entire system can be performed by injecting a known mass of gas into the system and comparing the mass injected. An indicated error does not necessarily mean that the calibration is wrong, since other factors can influence the accuracy of the system, e.g., analyzer calibration. A verification procedure is found in paragraph (d) of this ~~s~~Section.

(b) PDP calibration. (1) The following calibration procedures outlines the equipment, the test configuration, and the various parameters which must be measured to establish the flow rate of the constant volume sampler pump. All of the parameters related to the pump are simultaneously measured with the parameters related to a flowmeter which is connected in series with the pump. The calculated flow rate (at pump inlet absolute pressure and temperature) can then be plotted versus a correlation function which is the value of a specific combination of pump parameters. The linear equation which relates the pump flow and the correlation function is then determined. In the event that a CVS has a multiple speed drive, a calibration for each range must be performed.

(2) This calibration procedure is based on the measurement of the absolute values of the pump and flowmeter parameters that relate the flow rate at each point. Three conditions must be maintained to assure the accuracy and integrity of the calibration curve. First, the pump pressures should be measured at taps on the pump rather than at the external piping on the pump inlet and outlet. Pressure taps that are mounted at the top center and bottom center of the pump drive headplate are exposed to the actual pump cavity pressures, and therefore reflect the absolute pressure differentials. Secondly, temperature stability must be maintained during the calibration. The laminar flowmeter is sensitive to inlet temperature oscillations which cause the data points to be scattered. Gradual changes (+/-1 °C ~~{~~[+/-1.8 °F~~}~~]) in temperature are acceptable as long as they occur over a period of several minutes. Finally, all connections between the flowmeter and the CVS pump must be absolutely void of any leakage.

(3) During an exhaust emission test the measurement of these same pump parameters enables the user to calculate the flow rate from the calibration equation.

(4) Connect a system as shown in Figure F78-5. Although particular types of equipment are shown, other configurations that yield equivalent result may be used if approved in advance by the Executive Officer. ~~For the system indicated, the following data with given accuracy are required:~~ Table 3-1 Calibration Data Measurements lists the data required (with accuracy) for the indicated system.

(5) After the system has been connected as shown in Figure F78-6, set the variable restrictor in the wide open position and run the CVS pump for twenty minutes. Record the calibration data.

(6) Reset the restrictor valve to a more restricted condition in an increment of pump inlet depression (about 1.0 kPa (4 in. H_2O)) that will yield a minimum of six data points for the total calibration.[2] Allow the system to stabilize for 3 minutes and repeat the data acquisition.

Table 3-1. Calibration Data Measurements

Parameter	Sym.	Units	Tolerances
Barometric pressure corrected.....	P_B	kPa(in.Hg)	+/-0.03 kPa (+/-0.01 in. Hg)
Ambient temperature.....	T_A	^oC (^oF)	+/-0.3^oC (+/-0.54^oF)
Air Temperature into LFE.....	ETI	^oC (^oF)	+/-0.15^oC (+/-0.27^oF)
Pressure depression upstream of LFE..	EPI	kPa (in. H_2O)	+/-0.01kPa (+/-0.05 in. H_2O
Pressure drop across the LFE matrix..	EDP	kPa (in. H_2O)	+/-0.001kPa (+/-0.005 in. H_2O
Air temperature at CVS pump inlet....	PTI	^oC (^oF)	+/-0.25^oC (+/-0.45^oF)
Pressure depression at CVS pump inlet.....	PPI	kPa(in.Fluid)	+/-0.021kPa (+/-0.046 in. Fluid)
Specific gravity of manometer fluid (1.75 oil).....	Sp Gr	.....	
Pressure head at CVS pump outlet.....	PPO	kPa(in.Fluid)	+/-0.021kPa (+/-0.046 in. Fluid)
Air temperature at CVS pump outlet (optional).....	PTO	^oC (^oF)	+/-0.25^oC (+/-0.45^oF)
Pump revolutions during test period..	N	Revolutions	+/-1 revolution
Elapsed time for test period.....	t	seconds	+/-0.05 seconds

(7) Data analysis:

(i) The air low rate, Q_s, at each test point is calculated from the flowmeter data using the manufacturers' prescribed method.

(ii) The air flow rate is then converted to pump flow, V_o in m^3 per revolution at absolute pump inlet temperature and pressure.

$$V_o = (Q_s/n) \times (T_p/293) \times (101.3/P_p)$$

Where:

(A) V_o = Pump flow, m^3/rev (ft^3/rev) at T_p, P_p.

(B) Q_s = Meter air flow rate in standard cubic meters per minute; standard conditions are 20 ^oC, 101.3 kPa (68 ^oF, 29.92 in. Hg.).

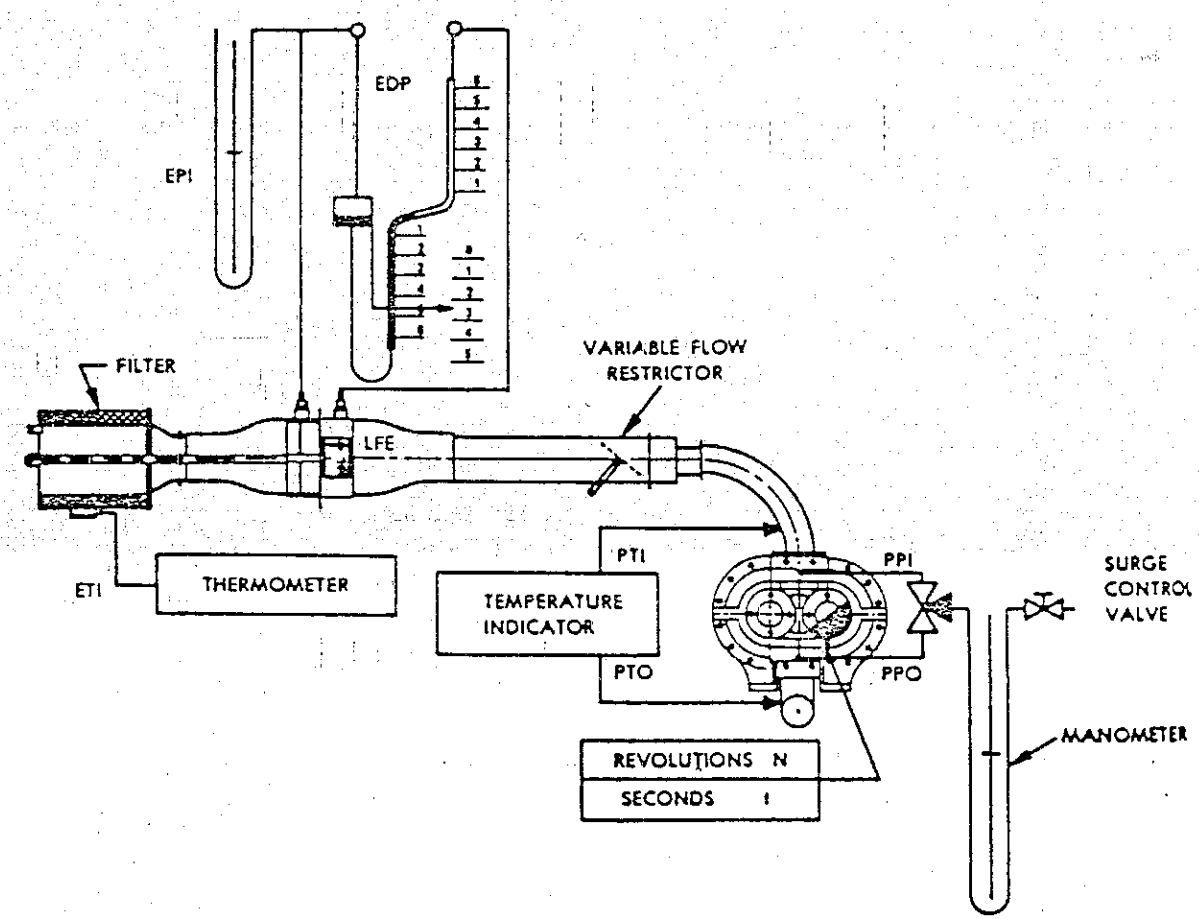

FIGURE F78-5:-PDP-CVS Calibration Configuration.

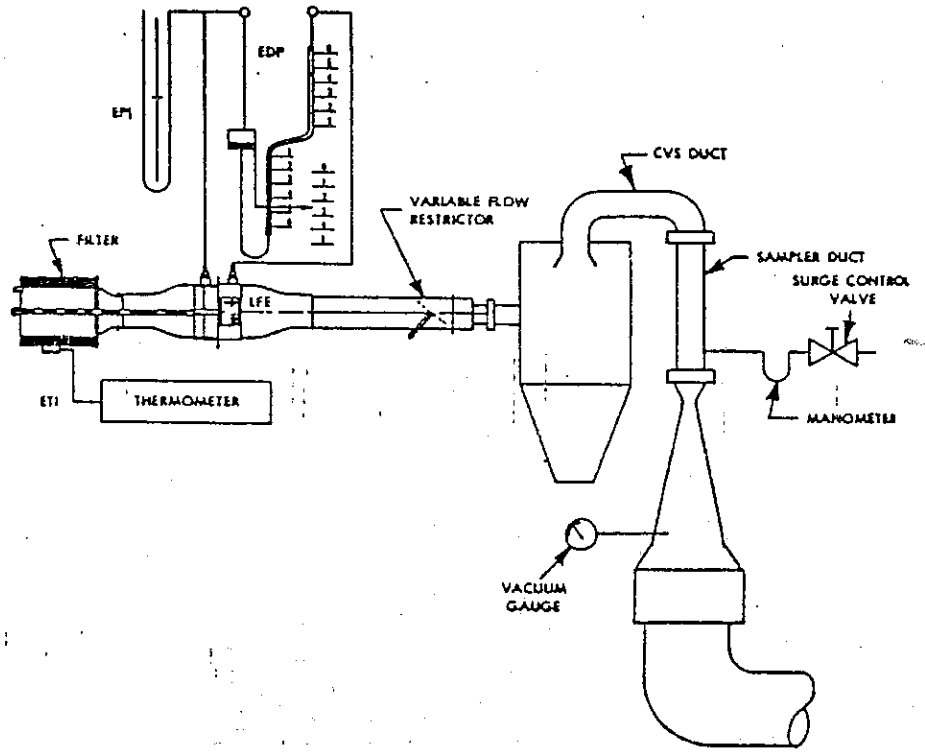

FIGURE F78-6: CFV-CVS Calibration Configuration.

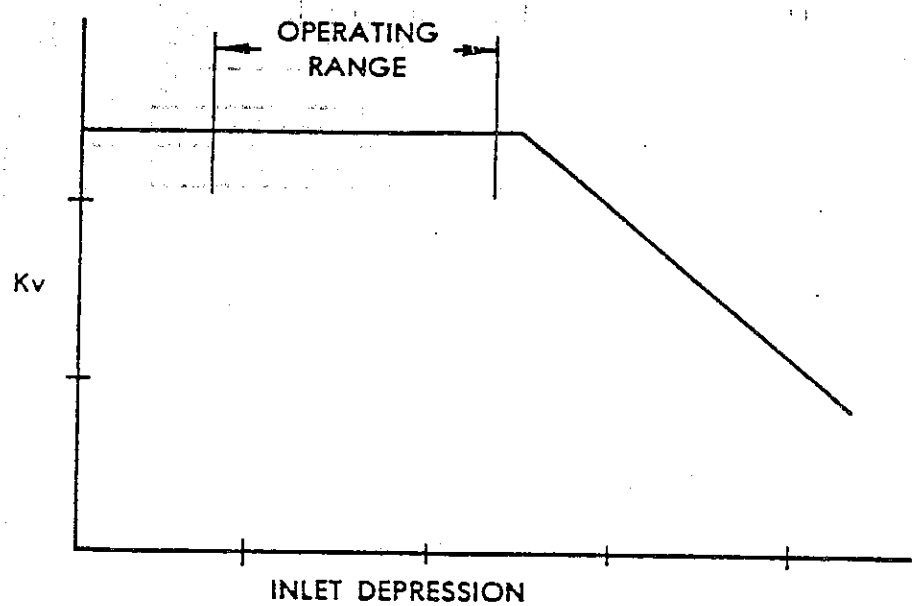

FIGURE F78-7: -Sonic Flow Choking.

(C) n = Pump speed in revolutions per minute.

(D) (1) T_p = Pump inlet temperature, (^oK) = PTI + 273.

(2) For English units, T_p = PTI + 460.

(E) (1) P_p = Absolute pump inlet pressure, kPa (in.Hg) = P_B - PPI.

(2) For English units, P_p = P_B - PPI(SP.GR./13.57).

Where:

(F) P_B = barometric pressure, kPa (in.Hg.).

(G) PPI = Pump inlet depression, kPa (in.fluid).

(H) SP.GR. +≡ Specific gravity of manometer fluid relative to water.

(iii) The correlation function at each test point is then calculated from the calibration data:

$$* \; X_o = \frac{\sqrt{\frac{\Delta P_p}{P_e}}}{\frac{1}{n}\sqrt{\frac{\Delta P_p}{P_e}}}$$

Where:

(A) X_o = correlation function.

(B) ΔP_p = The pressure differential from pump inlet to pump outlet, kPa (in.Hg) = P_e - P_p.

(C) (1) P_e = Absolute pump outlet pressure, kPa(in.Hg) = PB + PPO.

(2) For English units, P_e = P_B + PPO(SP.GR./13.57).

Where:

(D) PPO = Pressure head at pump outlet, kPa (in.fluid).

(iv) A linear least squares fit is performed to generate the calibration equations which have the forms:

$$V_o = D_o - M(X_o)$$
$$n = A - B(\Delta P_p)$$

D_o, M, A, and B are the slope-intercept constants, describing the lines.

(8) CVS system that has multiple speeds shall be calibrated on each speed used. The calibration curves generated for the ranges will be approximately parallel and the intercept values, D_o will increase as the pump flow range decreases.

(9) If the calibration has been performed carefully, the calculated values from the equation will be within +/-0.50 percent of the measured value of V_o Values of M will vary from one pump to another, but values of D_o for pumps of the same make, model, and range should agree within +/-3 percent of each other. Particulate influx from use will cause the pump slip to decrease as reflected by lower values for M. Calibrations should be performed at pump startup and after major maintenance to assure the stability of the pump slip rate. Analysis of mass injection data will also reflect pump slip stability.

(c) CFV calibration.

(1) Calibration of the Critical Flow Venturi (CFV) is based upon the flow equation for a critical venturi. Gas flow is a function of out pressure and temperature:

$$Q_s = \frac{K_v P}{\sqrt{T}}$$

Where:

(i) Q_s = Flow.

(ii) K_v = Calibration coefficient.

(iii) P = Absolute pressure.

(iv) T = Absolute temperature.

The calibration procedure described below establishes the value of the calibration coefficient at the measured values of pressure, temperature and air flow.

(2) The test equipment manufacturer's recommended procedure shall be followed for calibrating electronic portions of the CFV.

(3) Measurements necessary for flow calibration are ~~as follows:~~ listed in Table 3-2 Calibration Data Measurements.

Table 3-2 Calibration Data Measurements

Parameter	Sym.	Units	Tolerances
Barometric pressure corrected.....	P_B	kPa(in.Hg)	+/-0.03 kPa (+/-0.01 in. Hg)
Air Temperature, flowmeter.....	ETI	°C (°F)	+/-0.15°C (+/-0.27°F)
Pressure depression upstream of LFE..	EPI	kPa (in. H_2O)	+/-0.01kPa (+/-0.05 in. H_2O
Pressure drop across the LFE matrix..	EDP	kPa (in. H_2O)	+/-0.001kPa (+/-0.005 in. H_2O
Air flow.....	Q_s	m^3/min (ft^3/min)	+/-0.5%
CVS inlet depression.....	PPI	kPa(in.Fluid)	+/-0.02kPa (+/-0.05 in. Fluid)
Specific gravity of manometer fluid (1.75 oil).....	Sp Gr	.....	
Pressure head at CVS pump outlet.....	PPO	kPa(in.Fluid)	+/-0.021kPa (+/-0.046 in. Fluid)
Air temperature at venturi inlet.....	T_V	°C (°F)	+/-0.25°C (+/-0.45°F)

(4) Set up equipment as shown in Figure F78-6 and check for leaks. Any leaks between the flow measuring device and the critical flow venturi will seriously affect the accuracy of the calibration.

(5) Set the variable flow restrictor to the open position, start the blower and allow the system to stabilize. Record data from all instruments.

(6) Vary the flow restrictor and make at least 8 readings across the critical flow range of the venturi.

(7) Data analysis. The data recorded during the calibration are to be used in the following calculation:

(i) The air flow rate, Q_s, at each test point is calculated from the flowmeter data using the manufacturer's prescribed method.

(ii) Calculate values of the calibration coefficient for each test point:

$$K_v = \frac{Q_s \sqrt{T_v}}{P_v}$$

Where:

(A) Q_s = Flow rate in m^3/minute, standard conditions are 20 °C, 101.3 kPa (68 °F, 29.92 in.Hg)

(B) T_v = Temperature at venturi inlet, °K(°R).

(C) (1) P_v = Pressure at venturi inlet, kPa (mm Hg) = P_B-PPI.

For English units, $P_v = P_B$ - PPI(SP.GR./13.57).

(D) PPI = Venturi inlet pressure depression, kPa (in.fluid).

(E) SP.GR. = Specific gravity of manometer fluid, relative to water.

(iii) Plot K_v as a function of venturi inlet depression. For sonic flow, K_v will have a relatively constant value. As pressure decreases (vacuum increases), the venturi becomes unchoked and K_v decreases (is no longer constant). See Figure F78-7.

(iv) For a minimum of 8 points in the critical region, calculate an average K_v and the standard deviation.

(v) If the standard deviation exceeds 0.3 percent of the average K_v, take correction action.

(d) CVS system verification. The following "gravimetric" technique can be used to verify that the CVS and analytical instruments can accurately measure a mass of gas that has been injected into the system. If the CVS and analytical system will be used only in the testing of gasoline-fueled engines, the system verification may be performed using either propane or carbon monoxide. (Verification can also be accomplished by constant flow metering using critical flow orifice devices.)

(1) Obtain a small cylinder that has been charged with pure propane or carbon monoxide gas (caution-carbon monoxide is poisonous).

(2) Determine a reference cylinder weight to the nearest 0.01 grams.

(3) Operate the CVS in the normal manner and release a quantity of pure propane or carbon monoxide into the system during the sampling period (approximately 5 minutes).

(4) The calculations of Section 26 are performed in the normal way except in the case of propane. The density of propane (0.6109 kg/m^3/carbon atom (17.30 g/ft^3)is used.

(5) The gravimetric mass is subtracted from the CVS measured mass and then divided by the gravimetric mass to determine the percent accuracy of the system.

(6) The cause for any discrepancy greater than +/-2 percent must be found and corrected.

10. Hydrocarbon Analyzer Calibration.

(a) The FID hydrocarbon analyzer shall receive the following initial and periodic calibration.

(b) Initial and periodic optimization of detector response. Prior to its introduction into service and at least annually thereafter, the FID hydrocarbon analyzer shall be adjusted for optimum hydrocarbon response. Alternate methods yielding equivalent results may be used, if approved in advance by the Executive Officer.

(1) Follow the analyzer manufacturer's instructions or good engineering practice for instrument startup and basic operating adjustment using the appropriate FID fuel and zero-grade air.

(2) Optimize on the common operating range. Introduce into the analyzer a propane in air mixture with a propane concentration equal to approximately 90 percent of the most common operating range.

(3) Select an operating FID fuel flow rate that will give near maximum response and least variation in response with minor fuel flow variations.

(4) To determine the optimum air flow, use the FID fuel flow setting determined above and vary air flow.

(5) After the optimum flow rates have been determined, record them for future reference.

(c) Initial and periodic calibration. Prior to its introduction into service and monthly thereafter the FID hydrocarbon analyzer shall be calibrated on all normally used instrument ranges. Use the same flow rate as when analyzing sample.

(1) Adjust analyzer to optimize performance.

(2) Zero the hydrocarbon analyzer with zero-grade air.

(3) Calibrate on each normally used operating range with propane in air calibration gases having nominal concentrations of ~~15, 30, 45, 60, 75, and 90~~ 10, 20, 30, 40, 50, 60, 70, 80 and 90 percent of that range. For each range calibrated, if the deviation from a least squares best-fit straight line is 2 percent or less of the value at each data point, concentration values may be calculated by use of a single calibration factor for that range. If the deviation exceeds 2 percent at any point, the best-fit non linear equation which represents the data to within 2 percent of each test point shall be used to determine concentration.

11. Carbon Monoxide Analyzer Calibration.

(a) Initial and periodic interference check. Prior to its introduction into service and annually thereafter the NDIR carbon monoxide analyzer shall be checked for response to water vapor and CO_2:

(1) Follow the analyzer manufacturer's instruction for instrument startup and operation. Adjust the analyzer to optimize performance on the most sensitive range.

(2) Zero the carbon monoxide analyzer with either zero-grade air or zero-grade nitrogen.

(3) Bubble a mixture of 3 percent CO_2 in N_2 through water at room temperature and record analyzer response.

(4) An analyzer response of more than 1 percent of full scale for ranges above 300 ppm full scale or of more than 3 ppm on ranges below 300 ppm full scale will require corrective action. (Use of conditioning columns is one form of corrective action which may be taken.)

(b) Initial and periodic calibration. Prior to its introduction into service and monthly thereafter the NDIR carbon monoxide analyzer shall be calibrated.

(1) Adjust the analyzer to optimize performance.

(2) Zero the carbon monoxide analyzer with either zero grade air or zero grade nitrogen.

(3) Calibrate on each normally used operating range with carbon monoxide in N_2 calibration gases having nominal concentrations of ~~15, 30, 45, 60, 75, and 90~~ 10, 20, 30, 40, 50, 60, 70, 80 and 90 percent of that range. Additional calibration points may be generated. For each range calibrated, if the deviation from a least-squares best-fit straight line is 2 percent or less of the value at each data point, concentration values may be calculated by use of a single calibration factor for that range. If the deviation exceeds 2 percent at any point, the best-fit non-linear equation which represents the data to within 2 percent of each test point shall be used to determine concentration.

12. Oxides of Nitrogen Analyzer Calibration.

(a) Prior to its introduction into service and ~~weekly~~ monthly thereafter~~, if oxides of nitrogen are measured,~~ the chemiluminescent oxides of nitrogen analyzer shall be checked for NO_2 to NO converter efficiency. Figure F78-8 is a reference for the following steps:

(1) Follow the analyzer manufacturer's instructions for instrument startup and operation. Adjust the analyzer to optimize performance.

(2) Zero the oxides of nitrogen analyzer with zero-grade air or zero-grade nitrogen.

(3) Connect the outlet of the NO_x generator to the sample inlet of the oxides of nitrogen analyzer which has been set to the most common operating range.

(4) Introduce into the NO_x generator analyzer-system a NO in nitrogen (N_2) mixture with a NO concentration equal to approximately 80

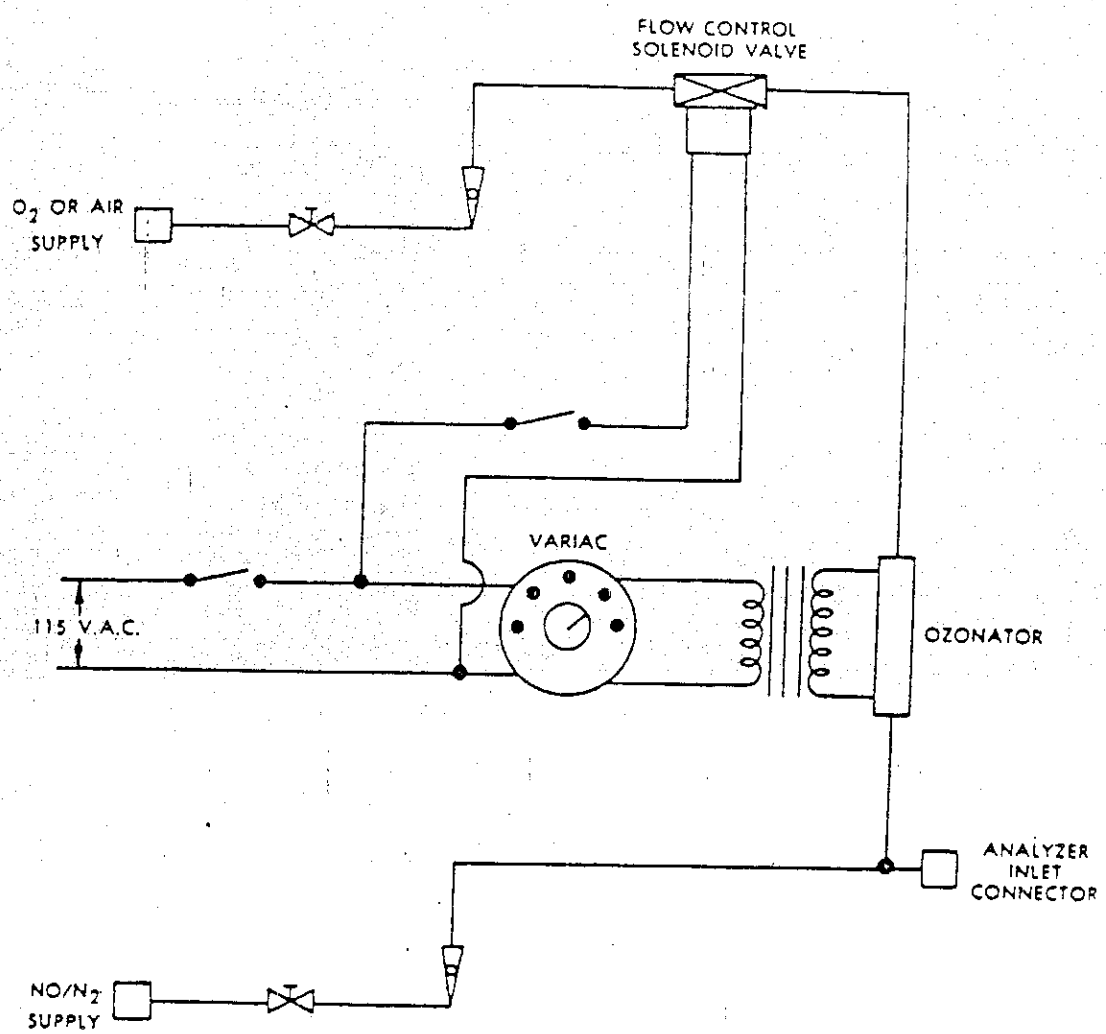

~~F78-3~~
(SEE FIG F90-3 FOR SYMBOL LEGEND)

FIGURE F78-8: - NOx Converter Efficiency Detector.

percent of the most common operating range. The NO_2 content of the gas mixture shall be less than 5 percent of the NO concentration.

(5) With the oxides of nitrogen analyzer in the NO mode, record the concentration of NO indicated by the analyzer.

(6) Turn on the NO_x generator O_2 (or air) supply and adjust the O_2 (or air) supply and adjust the O_2 (or air) flow rate so that the NO indicated by the analyzer is about 10 percent less than indicated in step 5. Record the concentration of NO in this $NO+O_2$ mixture.

(7) Switch the NO_x generator to the generation mode and adjust the generation rate so that the NO measured on the analyzer is 20 percent of that measured in step 5. There must be at least 10 percent unreacted NO at this point. Record the concentration of residual NO.

(8) Switch the oxides of nitrogen analyzer to the NO_x mode and measure total NO_x. Record this value.

(9) Switch off the NO_x generation but maintain gas flow through the system. The oxides of nitrogen analyzer will indicate the NO_x in the $NO+O_2$ mixture. Record this value.

(10) Turn off the NO_x generator O_2 (or air) supply. The analyzer will now indicate the NO_x in the original NO in N_2 mixture. This value should be no more than 5 percent above the value indicated in step 4.

(11) Calculate the efficiency of the NOx converter by substituting the concentrations obtained into the following equation:

Percent Efficiency=$\{1+(a-b)/(c-d)\}$x100
where:
a=concentration obtained in step (8).
b=concentration obtained in step (9).
c=concentration obtained in step (6).
d=concentration obtained in step (7).

If converter efficiency is not greater than 90 percent corrective action will be required.

(b) Initial and periodic calibration. Prior to its introduction into service and monthly thereafter, if oxides of nitrogen are measured, the chemiluminescent oxides of nitrogen analyzer shall be calibrated on all normally used instrument ranges. Use the same flow rate as when analyzing samples. Proceed as follows:

(1) Adjust analyzer to optimize performance.

(2) Zero the oxides of nitrogen analyzer with zero-grade air or zero-grade nitrogen.

(3) Calibrate on each normally used operating range with NO in N_2 calibration gases with nominal concentrations of 50 and 100 percent of that range. Additional calibration points may be generated.

13. Carbon Dioxide Analyzer Calibration.

(a) Prior to its introduction into service and monthly thereafter the NDIR carbon dioxide analyzer shall be calibrated:

(1) Follow the analyzer manufacturer's instructions for instrument startup and operation. Adjust the analyzer to optimize performance.

(2) Zero the carbon dioxide analyzer with either zero-grade air or zero-grade nitrogen.

(3) Calibrate on each normally used operating range with carbon dioxide in N_2 calibration gases with nominal concentrations of ~~15, 30, 45, 60, 75, and 90~~ 10, 20, 30, 40, 50, 60, 70, 80 and 90 percent of that range. Additional calibration points may be generated. For each range calibrated, if the deviation from a least-squares best-fit straight line is 2 percent or less of the value at each data point, concentration values may be calculated by use of a single calibration factor for that range. If the deviation exceeds 2 percent at any point, the best-fit non-linear equation which represents the data to within 2 percent of each test point shall be used to determine concentration.

14. Calibration of Other Equipment.

Other test equipment used for testing shall be calibrated as often as required by the manufacturer or as necessary according to good practice.

15. Test Procedures, Overview.

~~(a) The procedures described in this and subsequent sections are used to determine the conformity of engines with the standards set forth in the general provisions.~~

~~(b) The overall test consists of prescribed sequences of operating conditions.~~

~~(c) The exhaust emission test is designed to determine hydrocarbon, carbon monoxide, and oxides of nitrogen mass emissions. A proportional part of the diluted exhaust emissions is collected continuously for subsequent analysis, using a constant volume (variable dilution) sampler.~~

~~(d) Except in cases of component malfunction or failure, all emission control systems installed on or incorporated in a new motor engine shall be functioning during all procedures in these provisions. Maintenance to correct component malfunction or failure shall be authorized in accordance with Section I.~~

(a) The appropriate six-mode test cycle for non-handheld equipment engines, and the appropriate two-mode test cycle for handheld equipment engines, shall be utilized (See Table 1-1 Engine Test Cycles; Part I, Section 20).

(b) Particulate matter measurement data and results shall be generated by the use of a test procedure, as allowed by the Executive Officer, outlined in Part IV (i.e., International Organization for Standardization (ISO) test procedure 8178-1 RIC engines - Exhaust emissions measurement,

Part I: Test bed measurement of gaseous and particulate exhaust emission from RIC engines, Version N124, November 11, 1992).

16. Test ~~Sequence~~ Conditions, General Requirements.

(a) Ambient temperature levels encountered by the test engine throughout the test sequence shall not be less than 20° C (68° F) nor more than 30° C (86° F). ~~The engine~~ Non-handheld engines shall be ~~approximately~~ level during the emission test to prevent abnormal fuel distribution.

17. Engine Preparation.

~~(a) The manufacturer shall provide additional fittings and adapters, as required by the Executive Officer for exhaust sample collection.~~

(a) Engine Service Accumulation and Stabilization Procedure.

(1) The procedure for stabilizing the exhaust emission of an engine shall be the service accumulation procedure determined by the engine manufacturer, and shall be consistent with good engineering practice.

(2) The engine manufacturer shall determine, for each engine family, the amount of time required for stabilization of the engine-displacement-system combination with respect to emission test purposes. However, this stabilization time period shall not exceed 12 hours unless an allowance to do so is approved by the Executive Officer. The engine manufacturer shall maintain, and provide to the Executive Officer upon request, a record of the rationale used to determine the time period required for emission control system stabilization. The engine manufacturer may elect to accumulate 12 hours on each test engine within an engine family without making this determination.

(3) The appropriate fuel and lubricants specified in Section 4 of this Part shall be used in service accumulation.

(4) Engine maintenance that is performed in service accumulation shall be conducted in accordance with Part I, Section 22.

(b) Analyzer Pre-Test Procedures.

(1) Filter elements shall be replaced or cleaned as necessary; and the system shall be leak checked. The maximum allowable leakage rate on a vacuum side of a portion of the system is 0.5 percent of the in-use flow rate in that portion of the system. The maximum allowable leakage rate on a pressure side of a portion of the system is 5 percent of the in-use flow rate in that portion of the system. The emission analyzers shall be stabilized as necessary prior to calibration; heated sample lines, filters and pumps shall be stabilized thermally as necessary.

(2) Perform (as applicable) system checks, such as, sample-line temperatures, system response time, hydrocarbon hang-up, etc.

(3) Analyzer zero and span shall be checked before and after each test cycle.

(4) System flow rates and pressures shall be checked, and re-set as required.

18. Engine Preconditioning.

~~(a) The engine shall be moved to the test area and the following operations performed:~~

~~(1) The fuel tank(s) shall be drained and charged with the specified test fuel, Section 4, to half the tank(s) capacity.~~

~~(2) The engine shall be placed on a dynamometer and operated through the applicable mode schedule (see Section II (12)). The engine need not be cold, and may be used to set dynamometer horsepower.~~

~~(b) Within five (5) minutes of completion of preconditioning, the engine shall be removed from the dynamometer and moved to the soak area. The engine shall be stored for not less than the following times prior to the cold start exhaust test.~~

~~In no case shall the engine be stored for more than 36 hours prior to the exhaust test.~~

(a) Spark-ignition engines shall be preconditioned as follows:

(1) Operate the engine at a power greater than or equal to 50 percent maximum power at the rated or intermediate speed (as applicable) for 20 minutes.

(b) Diesel-cycle engines shall be preconditioned as follows:

(1) Operate the engine at idle for 2 to 3 minutes;

(2) Operate the engine at approximately 50 percent power at the maximum torque speed for 5 to 7 minutes; and,

(3) Operate the engine at rated speed and maximum power for 25 to 30 minutes.

(c) For both spark-ignition and diesel-cycle engines, the engine service accumulation may be substituted for the engine preconditioning if such service accumulation has been occurring for at least 40 minutes prior to commencing the test cycle.

(d) The test cycle portion of the emission test (i.e., the initial thermal stabilization determination) shall begin within 5 minutes after completing the engine preconditioning.

(e) Test modes shall be performed in the numerical order specified for the appropriate test cycle.

(f) Determine the maximum engine torque output at the rated or intermediate engine speed, as applicable. For non-handheld engines, determine and record the torque values that correspond to 75, 50, 25 and 10 percent of the maximum engine torque output. The minimum torque capability of an engine may be substituted for the 10-percent value when a 10-percent value of the maximum engine torque output is not attainable.

19. Dynamometer Procedure.

(a) Engine and Dynamometer Start-up.

(1) Only engine adjustments in accordance with Section 22 of Part I shall be allowed prior to the start of a test.

(2) The dynamometer shall be warmed up as necessary, and as recommended by the dynamometer manufacturer; or use good engineering practice.

(3) An engine may be operated using the engine's speed governor if the engine is so equipped, or with the throttle in a fixed position. The requirements of Section 15(b) must be satisfied.

(4) Once engine speed and load are set for a particular mode, the engine shall be operated for a sufficient period of time to achieve thermal stability. The objective is to stabilize all engine parameters that affect emissions prior to the start of any emissions measurements. The method used to determine thermal stability (e.g., variation in cylinder temperature, engine oil temperature, etc.) shall be recorded.

~~(a)~~(b) ~~The dynamometer run consists of a "hot" running test. The engine shall be started and warmed-up per manufacturer specifications.~~ The exhaust emissions are diluted with ambient air and a continuously proportional sample is collected for analysis during each ~~phase~~ test mode. The composite samples collected in bags are analyzed for hydrocarbons, carbon monoxide, carbon dioxide, and ~~for~~ oxides of nitrogen. A parallel sample of the dilution air is similarly analyzed for hydrocarbon, carbon monoxide, carbon dioxide, and ~~for~~ oxides of nitrogen.

~~(b)~~(c) Separate bags shall be collected for each ~~operating~~ test mode of the applicable test cycle during the ~~running~~ exhaust emission test.

~~(c)~~(d) ~~The engine speed shall be measured, and a speed vs. time recording, as evidence of dynamometer test validity, shall be supplied on request of the Executive Officer.~~ In order to verify that the test engine has followed the test cycle correctly, the dynamometer or engine readout signals for speed and torque must be collected in a manner that allows a statistical correlation between the actual engine performance and the test cycle. Normally, this collection process would involve conversion of the analog dynamometer or engine signals into digital values for storage into a microprocessor. The conversion of the dynamometer or engine values that are used to evaluate the validity of engine performance in relation to the test cycle shall satisfy the tolerance specifications outlined in Section 21, paragraph (g).

~~(d) If the dynamometer has not been operated during the two-hour period immediately preceding the tets, it shall be warmed up as recommended by the dynamometer manufacturer.~~

(e) If the dynamometer horsepower must be adjusted manually, it shall be set within one hour prior to the exhaust emissions test phase. The test engine shall not be used to make this adjustment. Dynamometers using automatic control of preselectable power settings may be set anytime prior to the beginning of the emissions test.

20. Engine Starting and Restarting.

(a) (1) The engine shall be started according to the manufacturer's recommended starting procedures.

(2) Choke operation. (i) Engines equipped with automatic chokes shall be operated according to the instructions in the engine manufacturer's operating instructions or owner's manual including choke setting and "kick down" from cold fast idle.

(ii) Engines equipped with manual chokes shall be operated according to the engine manufacturer's operating instructions or owner's manual. When times are provided in the instructions, the Executive Officer may specify the specific point for operation, within 15 seconds of the recommended time.

(3) The operator may use the choke, throttle etc. where necessary to keep the engine running.

(4) If the manufacturer's operating instructions or owner's manual do not specify a warm engine starting procedure, the engine (automatic and manual choke engines) shall be started by opening the throttle about half way and cranking the engine until it starts.

(b) Reserved.

(c) If the engine does not start after ten seconds of cranking, or ten cycles of the manual starting mechanism, cranking shall cease, the test shall be voided, the engine removed from the dynamometer, corrective action taken in accordance with Sections I (22 and 23), and the engine rescheduled for test. The reason for the malfunction (if determined) and the corrective action taken shall be reported.

(d) If the engine "false starts", the operator shall repeat the recommended starting procedure (such as resetting the choke, etc.)

(e) Stalling. (1) If the engine stalls during an operating mode, the engine shall be restarted immediately and the test continued.

(2) If the engine will not restart within one minute, the test shall be voided, the engine removed from the dynamometer, corrective action taken, and the engine rescheduled for test. The reason for the malfunction (if determined) and the corrective action taken shall be reported.

21. Dynamometer Test Runs.

(a) The engine shall be allowed to stand with the engine turned off (see Section 18 for required time). The engine shall be stored prior to the emission test in such a manner that precipitation (e.g., rain or dew) does

not occur on the engine. The dynamometer test consists of a steady-state ~~hot running~~ dilute exhaust gas sampling procedure. ~~The engine shall go through a sequence of selective operation modes as shown in Section II (12).~~

(b) The following steps shall be taken for each test:

(1) For all engines, with the sample selector valves in the "standby" position connect evacuated sample collection bags to the dilute exhaust and dilution air sample collection systems.

(2) Start the CVS (if not already on), the sample pumps and the temperature recorder~~.~~, and ~~(~~the heat exchanger of the constant volume sampler, if used.

(3) Adjust the sample flow rates to the desired flow rate and set the gas flow measuring devices to zero.

(i) For gaseous bag samples (except hydrocarbon samples), the minimum flow rate is ~~0.17 cfm (0.08 l/s).~~ 0.08 l/s (0.17 cfm).

(ii) For hydrocarbon samples, the minimum FID flow rate is ~~0.066 cfm (0.031 l/s).~~ 0.031 l/s (0.066 cfm).

Note: CFV sample flow rate is fixed by the venturi design.

(4) Attach the flexible exhaust tube to the engine ~~tailpipe(s)~~ exhaust outlet.

(5) Start the gas flow measuring device, position the sample selector valves to direct the sample flow into the "steady-state" exhaust sample bag, the "steady-state" dilution air sample bag~~, turn the ignition on,~~ and start cranking the engine.

(6) After the engine completes the engine manufacturer's specified warm-up period, engage the dynamometer.

(7) Operate the engine according to the ~~method set forth in Section 6.~~ appropriate test cycle (See Table 1-1 Engine Test Cycles, Part I, Section 20).

(8) Collect gaseous emissions for each mode of the test cycle in a separate sample bag. Gaseous emissions shall be collected for a period of four (4) minutes for each test mode.

(9) Turn the engine off 2 seconds after the end of the last test mode.

(10) Five seconds after the engine stops running, simultaneously turn off gas flow measuring device ~~No. 2~~ and position the sample selector valves to the "standby" position. Record the measured roll or shaft revolutions, (both gas meter or flow measurement instrumentation readings), and re-set the counter. As soon as possible, transfer the "stabilized" exhaust and dilution air samples to the analytical system and process the samples according to Section 22, obtaining a stabilized reading of the exhaust bag sample on all analyzers within 20 minutes of the end of the sample collection phase of the test.

(11) Turn off the CVS or disconnect the exhaust tube from the ~~tailpipe(s)~~ exhaust outlet of the engine.

(12) ~~Continuous monitoring of exhaust emissions will not normally be allowed.~~ Specific written approval must be obtained from the Executive Officer for continuous monitoring of exhaust emissions. Such an approval will require that analyzers used for continuous analysis be operated so that a measured concentration is between fifteen (15) and

eighty-five (85) percent of full-scale deflection, and be equipped with automatic range change circuitry, and other requirements that may be specified by the Executive Officer.

(c) Gather samples of all required modal emission data specified in Section 25. The duration of time during which these data are recorded shall be labeled as the "sampling period". The data collected during the sampling period shall be used for modal emission calculations.

(e) A test mode may be repeated.

(f) If a delay of more than one (1) hour occurs between the end of one mode and the beginning of another mode, the test is void and shall be re-started with the engine preconditioning sequence (Section 18).

(g) The engine speed and load values specified in Table 1-1 Engine Test Cycles, Section 20, Part I, shall be maintained to within +/- five (5) percent for a power mode. The engine speed only shall be maintained to within +/- ten (10) percent of the engine manufacturer's specified engine idle speed for an idle mode. When a torque that is less than 0.27 Nm (0.2 lb-ft) is applied to the engine, the engine speed and load shall be maintained to the smallest tolerance that is possible within the capabilities of the test equipment and by the use of good engineering practice. Such tolerance ranges shall be determined and recorded for each test mode.

(h) The Executive Officer shall specify tolerances for engine speed and load for test purposes when such specifications are supported by test data and results, surveillance information, and other engineering information.

(i) If the test equipment malfunctions at any time during a test mode, the test is void and shall be aborted. Corrective action should be taken and the test re-started.

(j) If the engine stalls while in a test mode, the engine shall be re-started immediately and the test continued at Section 18(d) of this Part. If the engine is not re-started within two (2) minutes, the test shall be voided. If maintenance is required on the engine, advanced approval from the Executive Officer is required as specified in Section 23 of Part I. After corrective action is taken, a test of the engine may be re-scheduled. The reason for the malfunction (if determined) and the corrective action conducted.

(l) Idle-mode fuel and air flow measurements may be determined immediately before or after the dynamometer sequence as dictated by good engineering practice.

22. Exhaust Sample Analysis.

The following sequence of operations shall be performed in conjunction with each series of measurements:

(a) For CO, CO_2, HC, and NOx:

(1) Zero the analyzers and obtain a stable zero reading. Recheck after tests.

(2) Introduce span gases and set instrument gains. In order to avoid errors, span and calibrate at the same flow rates used to analyze the test sample. Span gases should have concentrations equal to 75 to 100 percent of full scale. If gain has shifted significantly on the analyzers, check the calibrations. Show actual concentrations on chart.

(3) Check zeros; repeat the procedure in paragraphs (a) (1) and (2) of this section if required.

(4) Check flow rates and pressures.

(5) Measure HC, CO, CO_2, and, if appropriate, NOx, concentrations of samples.

(6) Check zero and span points. If difference is greater than 2 percent of full scale, repeat the procedure in paragraphs (a) (1) through (5) of this section.

(a) Measure HC, CO, CO_2 and NOx concentrations in the exhaust sample.

(1) Each analyzer range that may be used during a test cycle shall have the zero and span response recorded prior to the execution of each test cycle. Only the range(s) used to measure the emissions during a test cycle is required to have its zero and span recorded after the completion of the test cycle. The span shall be conducted at the same flow rates used to analyze the test sample. Span gases should have concentrations equal to 75 to 100 percent of full scale. Actual concentrations shall be recorded.

(2) Filter elements may be replaced between modes.

(3) System leak checks may be performed between modes.

(4) A hydrocarbon hang-up check may be performed between modes.

(b) Analyzer Post-Test Procedures.

(1) Perform a hydrocarbon hang-up check within one minute of the completion of the last mode in the test cycle.

(2) Analyzer span checks shall commence within six (6) minutes of the completion of the last mode in the test cycle. The zero and span response for each analyzer range used in the test cycle shall be recorded.

(3) A vacuum check shall be performed immediately after the span checks if filter elements were cleaned or replaced in the test. The results shall satisfy the specifications of Section 17(b)(1) of this Part.

(4) The analyzer drift between the before- and after-test cycle span checks of each analyzer shall satisfy the requirements as follows:

(A) The span drift (i.e., the change in the difference between the zero response and the span response) shall not exceed two (2) percent of the full-scale deflection for each range used in the test.

(B) The zero response drift shall not exceed two (2) percent of full-scale deflection for each range used above 155 ppm (or ppmC); or three (3) percent of full-scale deflection for each range below 155 ppm (or ppmC).

23. [Reserved]. Weighing Chamber and Microgram Balance Specifications.

(a) Ambient conditions. (1) Temperature. The temperature of the chamber (or room) in which the particulate filters are conditioned and weighed shall be maintained to within ± 10° F (± 6° C) of a set point between 68° F (20° C) and 86° F (30° C) during all filter conditioning and weighing.

(2) Humidity. The relative humidity of the chamber (or room) in which the particulate filters are conditioned and weighed shall be maintained to within ± 10 percent (relative humidity) of a set point between 30 and 70 percent during all filter conditioning and weighing.

(3) The chamber (or room) environment shall be free of any ambient contaminants (such as dust) that would settle on the particulate filters during their stabilization. It is required that at least two unused reference filters remain in the weighing room at all times in covered (to reduce dust contamination) but unsealed (to permit humidity exchange) petri dishes. These reference filters shall be placed in the same general area as the sample filters. These reference filters shall be weighed within 4 hours of, but preferably at the same time as, the sample filter weighings.

(4) If the average weight of the reference filters changes between sample filter weighings by ± 5.0 percent or more of the nominal filter loading (a recommended minimum of 5.3 milligrams), then all sample filters in the process of stabilization shall be discarded and the emissions tests repeated.

(5) If the average weight of the reference filters changes between sample filter weighings by more than -1.0 percent but less than -5.0 percent of the nominal filter loading (a weight loss) then the manufacturer has the option of either repeating the emissions test or adding the average amount of weight loss to the net weight of the sample.

(6) If the average weight of the reference filters changes between sample filter weighing by more than 1.0 percent but less than 5.0 percent of the nominal filter loading (a weight gain), then the manufacturer has the option of either repeating the emissions test or accepting the measured sample filter weight values.

(7) If the average weight of the reference filters changes between sample filter weighings by not more than ± 1.0 percent, then the measured sample filter weights shall be used.

(8) The reference filters shall be changed at least once a month, but never between clean and used weighings of a given sample filter. More than one set of reference filters may be used. The reference filters shall be the same size and material as the sample filters.

(b) Weighing balance specifications. The microgram balance used to determine the weights of all filters shall have a precision (standard deviation) of 20 micrograms and readability of 10 micrograms.

24. [Reserved]. Particulate filter Handling and Weighing.

(a) At least 1 hour, but not more than 80 hours, before the test, place each filter in a closed (to eliminate dust contamination) but unsealed (to permit humidity exchange) petri dish and place in a weighing chamber meeting the specifications of Section 23 for stabilization.

(b) At the end of the stabilization period, weigh each filter on a balance having a precision of 20 micrograms and a readibility of 10 micrograms.

(c) The filter shall then be stored in a covered petri dish or a sealed filter holder, either of which shall remain in the weighing chamber until needed for testing.

(d) If the filter is not used within 1 hour of its removal from the weighing chamber, it must be re-weighed before use. This limit of 1 hour may be replaced by an 8-hour limit if either of the following three conditions are met:

(1) A stabilized filter is placed and kept in a sealed filter holder assembly with the ends plugged, or

(2) A stabilized filter is placed in a sealed filter holder assembly, which is then immediately placed in a sample line through which there is no flow, or

(3) A combination of the conditions specified in paragraphs (d) (1) and (2).

(e) After the emissions test, and after the sample and back-up filters have been returned to the weighing room after being used, they must be conditioned for at least 1 hour but not more than 80 hours and then weighed.

(f) The net weight of each filter is its gross weight minus its tare weight. Should the sample on the filter contact the petri dish or any other surface, the test is void and must be rerun.

(g) The particulate filter weight (P_f) is the sum of the net weight of the primary filter plus the net weight of the backup filter.

~~(h) The following optional weighing procedure is permitted:~~

~~(1) At the end of the stabilization period, weigh both the primary and back-up filters as a pair on a balance having a precision of 20 micrograms and a readibility of 10 micrograms.~~

~~(2) After the emissions test, in removing the filters from the filter holder, the back-up filter is inverted on top of the primary filter. They must then be conditioned in the weighing chamber for at least one hour but not more than 80 hours. The filters are then weighed as a pair.~~

~~(3) Paragraphs (a), (c), (d), and (f) of this section apply to this option, except that the word "filter" is replaced by "filters."~~

25. Records Required.

The following information shall be recorded (or calculated) with respect to each test:

(a) Test number.

(b) Engine or engine ~~S~~system ~~or device~~ tested (brief description).

(c) Date and time of day for each part of the test schedule.

(d) Instrument operator(s).

(e) Engine Information: ~~Make, Engine identification number, Calendar year, Engine displacement, Engine family, Emission control system, Recommended idle RPM, and Nominal fuel tank capacity.~~

(1) Engine family name.

(2) Engine identification (e.g., engine serial number, engine code, model type, etc.).

(3) Engine class.

(4) Calendar-year production.

(5) Combustion cycle.

(6) Engine displacement.

(7) Engine emission control system(s).

(8) Engine fuel(s) and lubricants.

(9) Engine fuel/oil mixture ratio (as applicable).

(10) Nominal fuel tank capacity (as applicable).

(f) Engine Test Information:

(1) Number of hours of operation accumulated on the engine prior to the start of the engine pre-test portion of the test; and after the emission test.

(2) Maximum observed torque for intermediate and rated engine speeds (as applicable) during engine pre-test.

(3) Observed engine torque and speed for each mode.

(4) Continuous record of engine torque and engine speed for each mode.

(5) Engine inlet temperature and humidity (as applicable).

(6) Fuel mass flow rate for each mode (optional).

(7) Engine inlet air flow for each mode (optional).

(8) Engine exhaust gas flow rate.

(9) Pollutant mass flow.

(10) [Reserved].

(11) Exhaust sample line temperatures (as applicable).

(12) Ambient test environmental conditions (e.g., temperature, barometric pressure, saturation vapor pressure, absolute humidity, etc.). A central laboratory barometer may be used for pressure measurements; however, individual test cell barometric pressures must be within +/- 0.1 percent of the barometric pressure at the central barometer location.

~~(f)~~(g) Dynamometer Information: Manufacturer, model, serial number~~;~~. As an alternative to recording ~~the dynamometer serial number~~ this information, a reference to a engine test cell number may be used, with the advance approval of the Executive Officer, provided the test cell records show ~~the~~ pertinent instrument information.

~~(g)~~(h) All pertinent instrument information such as tuning~~-~~, gain~~-~~, serial numbers~~-~~, detector numbers~~,-range~~ and calibration curves. As an alternative, a reference to a engine test cell number may be used, with the advance approval of the Executive Officer, provided test cell calibration records show the pertinent instrument information.

~~(h)~~(i) Recorder Charts or other data acquisition devices: ~~Identify zero, span, exhaust gas, and dilution air sample, traces.~~

(1) Record and identify for each test cycle the zero traces for each range used, and span traces for each range used.

(2) Record and identify for each test mode the emission concentration traces and the associated analyzer ranges(s).

(3) Record and identify the hang-up check.

~~(i) Test cell barometric pressure, ambient temperature and humidity.~~

~~Note: A central laboratory barometer mat be used; Provided, that individual test cell barometric pressures are shown to be within +/- 0.1 percent of the barometric pressure at the central barometric location.~~

26. Calculations: Exhaust Emissions.

The final reported test results, ~~with oxides of nitrogen being optional,~~ shall be computed by use of the following formula: (The results of all emission tests shall be rounded, using the "Rounding-Off Method" specified in ASTM E 29-90, to the number of places to the right of the decimal point indicated by expressing the applicable standard to three significant figures.)

(a) Specific Emissions.

(1) The weighted emission rates for each individual gas component shall be calculated as follows:

$$\text{Emission Rate} = \frac{\Sigma\,(\text{Gas Mass}_i) \times (\text{WF}_i)}{\Sigma\,(\text{Power}_i) \times (\text{WF}_i)}$$

Where:

i	≡	1 to n; n is the number of modes in the applicable test cycle.
Gas Mass	≡	Mass of a pollutant for each test mode in grams.
WF_i	≡	Weighting factor for each test mode in accordance with Table 1-1 Engine Test Cycle; Section 20, Part I.
Power	≡	Gross engine power output for each test mode.

~~(a)~~(b) The mass of each pollutant for the ~~hot running~~ exhaust test is determined from the following:

(1) Hydrocarbon mass:

$$HC_{mass} = V_{mix} \times Density_{HC} \times (HC_{conc} / 1{,}000{,}000)$$

(2) Oxides of nitrogen mass:

$$NOx_{mass} = V_{mix} \times Density_{NO2} \times K_H \times (NOx_{conc} / 1{,}000{,}000)$$

(3) Carbon monoxide mass:

$$CO_{mass} = V_{mix} \times Density_{CO} \times (CO_{conc} / 1{,}000{,}000)$$

(4) Carbon dioxide mass:

$$CO_{2mass} = V_{mix} \times Density_{CO_2} \times (CO_{2conc} / 100)$$

~~(b)~~(c) Meaning of symbols:

(1) (i) HC_{mass} = Hydrocarbon emissions, in grams per test phase.

(ii) $Density_{HC}$ = Density of hydrocarbon in the exhaust gas, 576.8 g/m ^{3}/ carbon atom (16.33 g/ft^3/carbon atom), assuming an average carbon to hydrogen ratio of 1:1.85, at 20 ^oC (68 ^oF) and 101.3 kPa (760 mm Hg) pressure.

(iii) (A) HC_{conc} = Hydrocarbon concentration of the dilute exhaust sample corrected for background, in ppm carbon equivalent, i.e., equivalent propane x 3.

(B) $HC_{conc} = HC_e - HC_d(1 - (1/DF))$

(iv) (A) HC_e = Hydrocarbon concentrations of the dilute exhaust sample as measured, in ppm carbon equivalent (propane ppm X 3).

(B) HC_d = Hydrocarbon concentration of the dilution exhaust sample as measured, in ppm carbon equivalent (propane ppm x 3).

(2) (i) NOx_{mass} = Oxides of nitrogen emissions, grams per test phase.

(ii) $Density_{NO2}$ = Density of oxides of nitrogen in the exhaust gas, assuming they are in the form of nitrogen dioxide, 1913 g/m^3 (54.16 g/ft^3), at 20 °C (68 °F) and 101.3 kPa (760 mm Hg) pressure.

(iii) (A) NOx_{conc} = Oxides of nitrogen concentration of the dilute exhaust sample corrected for background, ppm.

(B) $NOx_{conc} = NOx_e - NOx_d(1 - (1/DF))$

Where:

(iv) NOx_e = Oxides of nitrogen concentration of the dilute exhaust sample as measured, ppm.

(v) NOx_d = Oxides of nitrogen concentration of the dilution air as measured, ppm.

(3)(i) CO_{mass} = Carbon monoxide emissions, in grams per test phase.

(ii) $Density_{CO}$ = Density of carbon monoxide, 1164 g/m^3(32.97g/ft^3), at 20 °C (68 °F) and 101.3 kPa (760 mm Hg) pressure.

(iii) (A) CO_{conc} = Carbon monoxide concentration of the dilute exhaust sample correct for background, water vapor, and CO_2 extraction, ppm.

(B) $CO_{conc}=CO_e - CO_d(1 - (1/DF))$

Where:

(iv) (A) CO_e = Carbon monoxide concentration of the dilute exhaust sample volume corrected for water vapor and carbon dioxide extraction, in ppm. The calculation assumes the carbon to hydrogen ratio of the fuel is 1:1:85.

(B) $CO_e = (1 - 0.01925CO_{2e} - 0.000323R)CO_{em}$

(v) CO_{em} = Carbon monoxide concentration of the dilute exhaust sample as measured, in ppm

(vi) CO_{2e} = Carbon dioxide concentration of the dilute exhaust sample, in percent.

(vii) R = Relative humidity of the dilution air, pct (see Section 25~~(a)~~ 25(a)(12)).

(viii)(A) CO_d = Carbon monoxide concentration of the dilution air corrected for water vapor extraction, ppm.

$$(B)\ CO_d = (1 - 0.000323R)CO_{dm}$$

Where:

(ix) CO_{dm} = Carbon monoxide concentration of the dilution air sample as measured, ppm.

Note: If a CO instrument which meets the criteria specified in Section 3 is used and the conditioning column has been deleted, CO_{em} can be substituted directly for CO_e and CO_{dm} must be substituted directly for CO_d.

(4) (i) CO_{2mass} = Carbon dioxide emissions, grams per test phase.

(ii) $Density_{CO2}$ = Density of carbon dioxide, 1830 g/m_3 (51.81 g/ft^3), at 20 °C (68~~)~~ °F) and 101.3 kPa (760 mm Hg) pressure.

(iii) (A) CO_{2conc} = carbon dioxide concentration of the dilute exhaust sample corrected for background, in percent.

$$(B)\ CO_{2conc} = CO_{2d}(1 - 1/DF)$$

Where:

(iv) CO_{2d} = Carbon dioxide concentration of the dilution air as measured, in percent.

(5) (i) $DF = 13.4/\{CO_{2e} + (HC_e + CO_e)10^{-4}\}$

~~(i)~~(ii) (A) V_{mix}= Total dilute exhaust volume in cubic meters per test phase corrected to standard conditions (293 °K (528 °R) and 101.3 kPa (760 mm Hg.)).

$$(B)\quad V_{mix} = \frac{Vo \times N \times (Pa\underline{P}_{\beta}\ Pi) \times 293}{101.3 \times T_p}$$

Where:

(ii) V_o = Volume of gas pumped by the positive displacement pump, in cubic meters per revolution. This volume is dependent on the pressure differential across the positive displacement pump. (See calibration techniques in Section 9).

(iii) N = Number of revolutions of the positive displacement pump during the test phase while samples are being collected.

(iv) P_B = Barometric pressure, kPa.

(v) Pi = Pressure depression below atmospheric measured at the inlet to the positive displacement pump, kPa.

(vi) T_p = Average temperature of dilute exhaust entering positive displacement pump during test while samples are being collected, ^oK.

(vii) (A) K_h = Humidity correction factor.

(B) $K_h = 1/\{1 - 0.0329(H - 10.71)\}$

Where:

(viii)(A) H = Absolute humidity in grams of water per kilogram of dry air.

(B) $H = \{(6.211)R_a \times P_d\}/\{P_B - (P_d \times R_a/ 100)\}$

(ix) R_a = Relative humidity of the ambient air, pct.

(x) P_D = Saturated vapor pressure, in kPa at the ambient dry bulb temperature.

(xi) P_B + = Barometric pressure, kPa.

27. [Reserved]. ~~Calculations; Particulate Exhaust Emissions.~~

~~(a) The final reported steady-state emission test results shall be computed by use of the following formula:~~

$$P_{WM} = \frac{P_H}{BHP\text{-}hr_H}$$

~~(1) P_{WM} = Weighted mass particulate, grams per brake horsepower-hour.~~

~~(2) P_H = Mass particulate measured during the hot running exhaust test, grams.~~

~~$BHP\text{-}hr_H$ = Total brake horsepower-hour (brake horsepower integrated with respect to time) for the hot running exhaust test.~~

(b) The mass of particulate for the hot running exhaust test is determined form the following equation when a heat exchanger is used (i.e., no flow compensation), and when background filters are used to correct for background particulate levels:

$$P_{mass} = (V_{mix} - V_{sf}) \times [P_f/V_{sf} - (P_{bf}/V_{bf} \times [1 - (1/DF)])$$

(1) P_{mass} = Mass of particulate emitted per test phase, grams per test phase. ($P_H = P_{mass}$ for the hot running exhaust test.

(2) V_{mix} = Total dilute exhaust volume corrected to standard conditions (528°R (293°K) and 760 mm Hg (101.3 kPa)), cubic feet per test phase. For a PDP-CVS:

$$V_{mix} = V_e \times [N(P_B - P_4)(528^{\circ}R)] / (760 \text{ mm Hg})(T_p)$$

in SI units,

$$V_{mix} = V_e \times [N(P_B - P_4)(293^{\circ}K)] / (101.3 \text{ mm Hg})(T_p)$$

Where:

(i) V_e = Volume of gas pumped by the positive displacement pump, cubic feet (cubic meters) per revolution. This volume is dependent on the pressure differential across the positive displacement pump.

(ii) N = Number of revolutions of the positive displacement pump during the test phase while samples are being collected.

(iii) P_B = Barometric pressure, mm Hg (kPa).

(iv) P_4 = pressure depressions below atmospheric measured at the inlet to the positive displacement pump (during an idle mode), mm Hg (kPa).

(v) T_p = Average temperature of dilute exhaust entering the positive displacement pump during test, °R (°K).

(3) V_{sf} = Total volume of sample removed from the primary dilution tunnel, cubic feet at standard conditions.

(i) For a single-dilution system:

$$V_{sf} = [V_{as} \times (P_B - P_{is}) \times 528^{\circ}R] / T_{is} \times 760 \text{ mm Hg}$$

Where:

(A) V_{as} = Actual volume of dilute sample removed form the primary-dilution tunnel, cubic feet.

(B) P_B = Barometric pressure, mm Hg.

(C) P_{is} = Pressure elevation above ambient measured at the inlet to the dilute exhaust sample gas meter or flow instrumentation, mm Hg. (For most gas meters or flow instruments with unrestricted discharge, P_{is} is negligible and can be assumed = 0.)

(D) T_{is} = Average temperature of the dilute exhaust sample at the inlet to the gas meter or flow instrumentation, °R.

(ii) For a double-dilution system:

$V_{sf} = V_{vf} - V_{pf}$

Where:

(A) $V_{vf} = [V_{av} \times (P_B - P_{iv}) \times 528^{o}R] / T_{iv} \times 760$ mm Hg.

(B) V_{av} = Actual volume of double diluted sample which passed through the particulate filter, cubic feet.

(C) P_B = Barometric pressure, mm Hg.

(D) P_{iv} = Pressure elevation above ambient measured at the inlet to the sample gas meter located at the exit side of the secondary-dilution tunnel, mm Hg. (For most gas meters with unrestricted discharge P_{iv} is negligible an can be assumed = 0.

(E) T_{iv} = Average temperature of the dilute exhaust sample at the inlet to the exit side gas meter or flow instrumentation, ^{o}R.

(F) $V_{pf} = [V_{sp} \times (P_a + P_{ip}) \times 528^{o}R] / T_{ip} \times 760$ mm Hg.

(G) V_{sp} = Actual volume of secondary dilution air, cubic feet.

(H) P_a = Barometric pressure, mm Hg.

(I) P_{ip} = Pressure elevation above ambient measured at the inlet to the sample gas meter or flow instrumentation located at the inlet side of the secondary dilution tunnel, mm Hg. (For most gas meters with unrestricted discharge P_{ip} is negligible and can be assumed = 0.)

(J) T_{ip} = Average temperature of the secondary dilution air at the inlet to the inlet side gas meter or flow instrumentation, ^{o}R.

(4) P_f = Mass of particulate on the sample filter (or sample back-up filters if the back-up filter is required to be included, grams per test phase.

(5) P_{bf} = Net weight of particulate on the background particulate filter, grams.

(6) $V_{bf} = [V_{ab} \times (P_B + P_{ib}) \times 528^{o}R] / T_{ib} \times 760$ mm Hg

Where:

(i) V_{ab} = Actual volume of primary dilution air sampled by background particulate sampler, cubic feet.

(ii) P_{ib} = Pressure elevation above ambient measured at the inlet to the background gas meter or flow instrument, mm Hg. (For most gas meters or flow instruments with unrestricted discharge, P_{ib} is negligible and can be assumed = 0.)

(iii) T_{ib} = Average temperature of the background sample at the inlet to the gas meter or flow instrument, ^{o}R.

(7) $DF = 13.4 / [CO_{2e} + (HC_e + CO_e) \times 10^{-4}]$, or $DF = 13.4 / CO_{2e}$.

(8) Real time flow rate measurement under these regulations. The appropriate changes in the above calculations shall be made using sound engineering principles.

(9) Other systems and options, as permitted under these regulations, may require calculations other than these, but must be based on sound engineering principles and be approved in advance by the Executive Officer at the time the alternate system is approved.

Part IV. Particulate Matter Test Procedures.

The International Organization for Standardization (ISO) test procedure 8178-1 RIC engines - Exhaust emissions measurement, Part I: Test bed measurement of gaseous and particulate exhaust emission from RIC engines, Version N124, dated November 11, 1992, shall be incorporated, with modification, by reference herein. Entire clauses of the 8178-1 procedure that are incorporated shall be indicated by section number and title. Modifications to the 8178-1 clauses may include either the deletion of existing language or the addition of new California language, or a combination of both. Deletions of the existing language shall be indicated by the phrase "DELETE:"; additions of the new California language shall be indicated by the phrase "ADD:". Any existing language that is not so indicated shall remain unchanged. Clauses of the 8178-1 test procedure that are not indicated shall not be incorporated into these procedures.

To the extent as allowed by the Executive Officer, and that the provisions of ISO 8178, Part 1, Version N124, dated November 11, 1992, pertain to testing and compliance of particulate emissions from utility and lawn and garden equipment engines, such provisions are adopted and incorporated herein by reference.

The provisions contained in the 8178-1 test procedure that do not pertain to the utility and lawn and garden equipment engine regulations shall not be applicable to the these procedures.

1. Scope.

2. Normative References.

3. Definitions.

(a) ADD: "The definitions provided in Section 2 of Part I of these procedures shall be applicable in addition to the definitions contained herein."

4. Symbols and Abbreviations.

(a) ADD: "The abbreviations provided in Section 3 of Part I of these procedures shall be applicable in addition to the definitions contained herein."

5. Test Conditions.

(a) Section 5.4 - Engine air inlet system.
(1) DELETE: All existing language.
(2) ADD: "The test engine shall be equipped with the air inlet system that is specified for the engine configuration which was selected as the certification test engine."

(b) Section 5.5 - Engine exhaust system.
(1) DELETE: All existing language.

(2) ADD: "The test engine shall be equipped with the exhaust system that is specified for the engine configuration which was selected as the certification test engine."

6. Test Fuels.

(a) DELETE: All existing test fuel language.
(b) ADD: "Fuels and lubricants used for engine certification and service accumulation shall satisfy the requirements specified in Section 4 of Part III."

7. Measurement Equipment and Data to be Measured.

(a) DELETE: Any existing language that is applicable only to the measurement and determination of gaseous emissions.

8. Calibration of the Analytical Instruments.

(a) DELETE: All existing analytical instrument calibration language.
(b) ADD: "Analyzers shall be calibrated as specified in Section 7 of Part III."

9. Calibration of the Particulate Sampling System.

10. Running Conditions (Test Cycles).

(a) DELETE: All existing language.
(b) ADD: "Engine test cycles are outlined in Table 1-1 Engine Test Cycles: Section 20, Part I."

11. Test Run.

(a) DELETE: Any existing language that is applicable to test cycles contained within ISO 8178-4.
(b) ADD: "The engine test cycles and appropriate sequences are specified in Table 1-1 Engine Test Cycles; Section 20, Part I."
(c) DELETE: Any existing language that is applicable only to the measurement and determination of gaseous emissions.

12. Data Evaluation for Gaseous Emissions and Particulate Emissions.

(a) DELETE: Any existing language that is applicable only to the evaluation of data for gaseous emissions.

13. Calculation of Gaseous Emissions.

(a) DELETE: Any existing language that is applicable only to the calculation of gaseous emissions.

14. Calculation of Particulate Emissions.

15. Determination of the Gaseous Emissions.

(a) DELETE: Any existing language that is applicable only to the determination of gaseous emissions.

16. Determination of the Particulates.

17. Figures and Explanations.

(a) Annex A
(b) Annex B -- Auxiliary equipment
(c) Annex C -- NMHC method, efficiency
(d) Annex D -- Calculation formulas for u, v and w
(e) Annex E -- Heat calculation (transfer tube)
(f) Annex F -- Informative