California Environmental Protection Agency

Air Resources Board

Vapor Recovery Test Procedure

Proposed: TP-201.2

Emission Factor for Phase II Systems

Adopted: April 12, 1996
Amended: _____

The method is being amended for ease of viewing, the method is shown as repealed text and proposed text.

California Environmental Protection Agency
Air Resources Board

Vapor Recovery Test Procedure

TP-201.2

Emission Factors for Phase II Systems

Definitions common to all certification and test procedures are in:

D-200 Definitions of Vapor Recovery Procedures

For the purpose of this procedure, the term "ARB" refers to the State of California Air Resources Board, and the term "ARB Executive Officer" refers to the Executive Officer of the ARB or his or her authorized representative or designate.

Warning:
When conducting any of the calibration, equipment installation and testing procedures presented in this test procedure it is imperative that all test personnel are acutely aware of the fact that gasoline is an extremely hazardous and inflammable material. When working around liquid gasoline and/or gasoline vapors in either a laboratory or industrial settings, a thorough and complete hazard analysis should be completed prior to the installation of any test equipment or the commencement of testing operations. Adequate ventilation must be provided to protect personnel from inhalation hazards associated with the chemical compounds found in gasoline and to reduce the concentration of combustible gases to less than 10% of the Lower Explosive Limit to minimize the risk of fire or explosion. All potential ignition sources for gasoline or gasoline vapors must be identified and the threat of fire or explosion must be eliminated.

1 PURPOSE AND APPLICABILITY

1.1 General

This procedure applies to the determination of the mass emission factor (in units of pounds of hydrocarbon per thousand gallons of gasoline dispensed, lb/kgal) for motor vehicle fueling operations at gasoline dispensing facilities (GDF) equipped with Phase II vapor recovery systems (VRS). This procedure may be applied, with appropriate modifications, for determination of the emission factor for the dispensing of any organic liquid, although it is written to reflect application to the facility equipment and operating practices associated with the dispensing of gasoline to motor vehicles.

1.2 Modifications

Any modification of this method shall be subject to approval by the ARB Executive Officer. Approval must be obtained in writing, prior to beginning any certification testing based on a modified version of this test procedure.

2 PRINCIPLE AND SUMMARY OF TEST PROCEDURE

The purpose of this test procedure is to determine the mass emission factor for motor vehicle fueling operations at gasoline dispensing facilities (GDF) equipped with Phase II vapor recovery systems (VRS). The numerator of the emission factor represents a determination of the mass of gasoline vapors (in units of pounds of non-methane hydrocarbon calculated as propane) that are released to the atmosphere as a result of gasoline dispensing to a predetermined matrix of motor vehicles during a specific time period (typically 4 to 7 days). The denominator of the emission factor represents the volume of gasoline (in thousand gallon units, kgal) that is dispensed to the predetermined matrix of motor vehicles during the same specific time period for which mass emissions are determined.

2.1 Principle

The mass emission factor is made by measuring, or otherwise quantifying, the mass at four significant sources of atmospheric emissions including: (1) the interface of the dispensing nozzle with the vehicle fill pipe, (2) pressure driven fugitive emissions that may be lost to the atmosphere through several dozen different system components, (3) storage tank vent lines, and if present, (4) the exhaust stream from a vapor processor or vapor incinerator. In summary,

$m_{(1)}$= the mass emitted at the nozzle-fill pipe interface,

$m_{(2)}$= the mass emitted from pressure driven fugitive leaks,

$m_{(3)}$= the mass emitted from storage tank vents, and

$m_{(4)}$= the mass emitted from a vapor processor or vapor incinerator.

The emission factor is determined by summing the mass emissions at the four locations identified and dividing by the volume of gasoline dispensed at test point 1. The mass emissions determined at test points 2 through 4 are affected by gasoline dispensing that occurs at dispensing locations other than the nozzle being monitored at test point 1. Therefore, it is necessary to include only a fraction of the emissions measured at test points 2 through 4 in the calculation of the mass emission factor. The mass lost to the atmosphere at test points 2 through 4 is determined for the entire time period bounded by the time of the first and last monitored dispensing episodes at test point 1. The fraction of the emissions at test points 2 through 4 that is used in the emission factor calculation is equal to the ratio of the volume of gasoline dispensed at test point 1 for all monitored dispensing episodes to the total volume of gasoline dispensed from the entire GDF during the time period bounded by the time of the first and last dispensing episodes at test point 1. (Note that if storage tanks and/or vent lines are not connected by a manifold the total GDF volume used will only include the volume dispensed from the storage tank supplying the dispensing nozzle at test point 1.)

The mass emitted from pressure driven fugitives may be released from several dozen VRS components such as nozzle check valves, Phase I fill tube and vapor return line connections, spill bucket drain valves, and Pressure-Vacuum relief valves installed on tank vents. Direct measurement is impractical because fugitive emissions occur at locations which may be unknown and are too numerous and spatially dispersed.

Therefore, the fugitive emission mass is determined from hydrocarbon concentration measurements made at one or more representative locations in the VRS and from equations developed from static pressure decay test data. These equations are used to predict the total fugitive emission volumetric leak rate as a function of system pressure. Alternately, the fugitive emissions can be directly measured by introducing VRS modifications, which are in place only during the emission factor test, and are designed to eliminate the pressure driving force at the multitude of possible fugitive sources and direct all fugitive emissions to the vent line where direct measurement is possible.

The emissions occurring from closed PV valves installed on tank vents may be quantified by the fugitive emissions calculation procedures. However, the opening of a PV valve during a large pressure relief event will have a significant effect on VRS emission control performance and such vent emissions are not quantified by fugitive emission calculation procedures. For this reason emissions from the tank vent line are also directly measured as a point source.

2.2 Summary

As required to determine an emission related parameter and except where otherwise specified, the equipment and procedures specified in the following test methods shall be used.

EPA Method 2A	Direct Measurement of Gas Volume Through Pipes and Small Ducts
EPA Method 2B	Determination of Exhaust Gas Volume Flow Rate From Gasoline Vapor Incinerators
EPA Method 18	Measurements of Gaseous Organic Compound Emissions by Gas Chromatography
EPA Method 25A	Determination of Total Gaseous Organic Compound Emissions Using a Flame Ionization Detector
EPA Method 25B	Determination of Total Gaseous Organic Compound Emissions Using a Nondispersive Infrared Analyzer

3 BIASES AND INTERFERENCE

3.1 Vehicle Biases and Interference

3.1.1 Inclusion of Vehicles in Test Procedure

A representative vehicle matrix shall be determined for the subject facility according to TP-201.2A.

3.1.2 Exclusion of Certain Vehicle Results from Test Results

The following vehicles shall be tested by this test procedure if the vehicle will fill an opening in the vehicle matrix that exists at the time the vehicle arrives at the GDF. However, the hydrocarbon mass and dispensed gasoline volume for such vehicles are not to be included in the calculations used to determine the mass emission factor unless the ARB Executive Officer specifically orders inclusion of each individual vehicle in writing. The test results for excluded vehicles shall be reported separately, with a discussion of the likely causes for their failing to meet any requirements specified below.

For the purpose of determinations of compliance with or violation of the certification criterion, exclude vehicles that demonstrate:

(1) Non-conformance with CARB specifications for fill pipes and openings of motor vehicle fuel tanks.

The results for vehicles with fill pipe configurations and/or access zones which do not conform with applicable specifications and requirements shall be excluded. To qualify for use in the emission factor determination vehicles must arrive at the GDF with a properly installed fill pipe cap and leaded nozzle spout restriction device that are compatible with the design of the vehicle fuel system.;

(2) Non-conformance with vehicle leak check requirement

The results for vehicles which do not pass the vehicle leak check requirement (i.e. those vehicles that demonstrate a leak rate greater than 0.01 cfm (283 ml/min) at a vehicle fill pipe gauge pressure of 0.5 " WC) shall be excluded.

Note: Some vehicles, especially those equipped with an ORVR system, are designed with fuel and evaporative emission control systems that are designed such that properly operating vehicles will not demonstrate compliance with the vehicle leak check. The vehicle leak check requirement may be waived, on a vehicle-by-vehicle basis, upon determination by the ARB Executive Officer that the vehicle matrix required by TP-201.2A can not otherwise be filled.

The vehicle leak check requirement may be waived for the entire emission factor test, on a system-by-system basis, upon determination by the ARB Executive Officer that the system is expected to always maintain negative gauge pressure in every vehicle fuel tank and fill pipe during all monitored dispensing episodes at test point 1.

(3) non-conformance with sleeve leak check requirement

The results for vehicles with leak detector readings (per EPA Method 21) above 10% of the LEL (2100 ppm as propane) within one inch (2.5 cm) outside the sampling sleeve shall be excluded.

Note: Vehicles which fail to meet the sleeve leak check may be included on a case by case basis if the ARB Executive Officer specifically requires inclusion of each individual vehicle.

Fueling episodes that do not conform with the nozzle sleeve leak check requirement will result in a low bias in the emission factor if included in the emission factor calculations. The emission factor calculated by including test data for vehicles which fail the sleeve leak check will be lower than the true emission factor due to the failure of the test apparatus to capture and quantify the entire mass of emissions lost to the atmosphere at test point 1 during such dispensing episodes.

The determination of an emission factor greater than the required performance standard , which has been calculated by including test data for vehicles which failed to meet the sleeve leak check, demonstrates a failure to comply with the performance standard. Such results indicate that the true emission factor would also fail to meet the performance standard by a greater, albeit unknown, margin.

The determination of an emission factor less than or equal to the required performance standard, which has been calculated by including test data for vehicles which failed to meet the sleeve leak check, cannot absolutely demonstrate compliance with the performance standard due to the fact that the true emission factor would be greater than the calculated result by some unknown margin.

(4) inadequate dispensed volume.

The results for vehicle fueling episodes during which less than four gallons of gasoline are dispensed shall be excluded.

(5) Contamination of Nozzle Sample Sleeve with Liquid Gasoline

The results for vehicle fueling episodes in which the nozzle sample sleeve is contaminated with liquid gasoline as a result of inappropriate action by the nozzle user such as topping off or depressing the nozzle trigger when the nozzle is not properly inserted in the vehicle fill-pipe shall be excluded.

(6) 1998 or newer model year vehicle equipped with an on-board refueling vapor recovery ORVR system

The results for vehicle fueling episodes in which gasoline is dispensed to a vehicle equipped with an ORVR system shall be excluded. This is necessary because the ORVR system is designed to recover 95% of the mass of gasoline vapors displaced from the vehicle tank during the fueling episode. Therefore, the mass of vapor available for control by the Phase II system will already be at or below the required emission factor performance standard. If ORVR vehicles were included in the emission factor determination along with non-ORVR vehicles a significant reduction

(depending on the percentage of the total volume dispensed to ORVR vehicles) in the emission factor would occur. Thus allowing the emission factor for non-ORVR vehicles to be significantly higher than the required emission factor performance standard.

The ARB Executive Officer may require the applicant to calculate a separate ORVR Vehicle Emission Factor based solely on the ORVR Vehicle dispensing episodes. In this case, calculation methods analogous to those presented in Section 11 shall be conducted using the ORVR vehicle mass emission and dispensed volume data.

3.2 Facility Biases and Interference

3.2.1 Static Pressure Performance

If pressure driven fugitive emissions will be determined using the calculation approach, based on leak rate versus pressure correlation equations developed from static pressure decay, testing then the subject dispensing facility shall demonstrate compliance with the appropriate static pressure performance standard as required by CP-201. Compliance shall be demonstrated 48 to 72 hours prior to beginning, and immediately following the completion of the testing conducted using this test procedure.

3.2.2 Representative Facility Operating Matrix

The subject facility shall operate in compliance with the performance standards and performance specifications which are required by ARB Certification Procedure CP-201as well as system specific requirements to be included in the Certification Order for the system undergoing testing.

During certification testing, any conditions of installation, operation, and maintenance which deviate from such specifications unless intentionally created for the purpose of challenge and/or failure mode testing, shall be recorded and included as amendments to the specifications of certification. Subsequent to such certification, any conditions which occur outside such specifications (for any facility installed, operating, and maintained on the basis of such certification) shall constitute a violation of the specifications of certification.

4 SENSITIVITY, RANGE, AND PRECISION

The measurements of concentration and volumetric parameters required by TP-201.2 are well within the limits of sensitivity, range, and precision of the specified equipment.

5 EQUIPMENT

Equipment specifications are given below and some equipment configurations are shown in Figures 1 through 22.

Alternatives to the required equipment can be as good or better in certain testing circumstances. Such alternatives shall only be used subject to prior written approval by the ARB Executive Officer, as required in Section 13.

(1) Hydrocarbon Analyzer

The default mode of determining hydrocarbon (HC) concentrations in this procedure is a determination of non-methane hydrocarbon concentration as propane. Alternative test procedures for determining non-methane hydrocarbons (NMHC), methane (CH_4) and total hydrocarbon (THC) concentrations have been validated for some applications and may be used, subject to the approval of the ARB Executive Officer. Such procedures typically measure the concentration of two of the three classes of hydrocarbon species with the third being calculated by addition or subtraction. (e.g. NMHC + CH_4 = THC or THC – CH_4 = NMHC).

Table 1 presents a selection of HC analyzers that are appropriate for measurement of the nozzle sleeve and vent sleeve sample concentration. A wide variation in the concentrations from less than 100 ppm to greater than 10 % by volume may occur in the vent or nozzle sleeve sample. the wide range of concentration requires the use of an array of analyzers (typically two or three) with overlapping ranges. (e.g. 100 ppm to 4900 ppm, 4000 ppm to 7.6%, and 4% to 76%) The notes following the table provide estimates of the minimum and maximum mass emission rates that can be quantified over the typical range of volumetric sweep rates utilized for the nozzle and vent sleeve sample collection devices.

The range and sensitivity of any hydrocarbon analyzer shall be selected such that the maximum concentration to be measured is no more than 98 percent of the range and the minimum concentration that must be quantified is not less than 2 percent of the range. Accurate and repeatable analysis over the range of concentrations measured shall be demonstrated by a successful multi-point laboratory calibration performed within six months prior to use of the analyzer for TP-201.2 and by zero, mid-span and high-span field calibration checks conducted on each day of testing. Documentation of such calibrations shall be kept on file, permanently, and made available to the ARB Executive Officer on request.

Any sample that is extracted from within the VRS piping or storage tank shall be analyzed by using a non-destructive detection method. Non-destructive analysis is required so that the entire volume of sample extracted for analysis can be returned, unaltered to the VRS at the point from which it was withdrawn. Failure to accomplish 100% sample volume return can reduce the operating pressure of the VRS and result in an unacceptable low bias in the mass of point source and fugitive emissions that must be accurately determined by this test procedure.

A Non-dispersive Infrared (NDIR) analyzer with selected filters and/or detectors which block methane measurement shall be used when the emission factor is to be calculated for non-methane hydrocarbon. When using an NDIR instrument for total hydrocarbon measurements, a dual filter/detectors design must be used to measure both non-methane hydrocarbon as propane and methane concentrations or the instrument filters and detectors must be designed such that total hydrocarbon as propane is measured.

Any sampling and analysis system using a flame ionization detector (FID) can not be designed so that 100% of the sample that is extracted for analysis can be returned, unaltered, to the sample point, because the operation of the FID significantly alters the portion of the sample which is analyzed. An analyzer with a FID may be used for the test when a measurement is for total hydrocarbon and there is no requirement for returning sample, unaltered, to the sample manifold (e.g. the nozzle or vent line sleeve sample). A

FID analyzer may be capable of more accurate and repeatable measurements than an NDIR analyzer when the concentrations to be measured are less than several hundred ppm. One possible drawback to the FID analyzer is that the response time may be much greater than for an NDIR analyzer at comparable analyzer ranges. This can be problematic if the FID response must be correlated with other measurement devices with faster response times.

Hydrocarbon analysis required for TP-201.2 shall not be conducted using a combination of FID and NDIR instruments unless the applicant for certification has presented the ARB Executive Officer with written data and analysis demonstrating that any variations which exist in analyzer response times and/or the analyzer response to gasoline vapor concentrations do not result in an unacceptable level of bias or error in the test results.

(2) Carbon Monoxide Analyzer for Vapor Incinerator Exhaust

Use an NDIR analyzer for measurement of exhaust CO concentrations. To the extent practical, the analyzer range and sensitivity shall be selected such that the maximum concentration measured is no more than 98 percent of the range and the minimum concentration that must be quantified is not less than 2 percent of the range. Accurate and repeatable analysis over the range of concentrations measured shall be demonstrated by a successful multi-point laboratory calibration performed within six months prior to use of the analyzer for TP-201.2 and by zero, mid-span and high span field calibration checks conducted on each day of testing.

(3) Carbon Dioxide Analyzer for Vapor Incinerator Exhaust

Use an NDIR analyzer for measurement of exhaust CO_2 concentrations. To the extent practical, the analyzer range and sensitivity shall be selected such that the maximum concentration measured is no more than 98 percent of the range and the minimum concentration that must be quantified is not less than 2 percent of the range. Accurate and repeatable analysis over the range of concentrations measured shall be demonstrated by a successful multi-point laboratory calibration performed within six months prior to use of the analyzer for TP-201.2 and by zero, mid-span and high span field calibration checks conducted on each day of testing.

(4) Volume

Use a calibrated positive displacement meter or a turbine meter for measurement of volumetric flow rate.

Any volume meter that is installed in the vapor recovery system plumbing shall demonstrate conformance with the back pressure limit (BPL), specified below:

Meters with a manufacturer specified maximum flow rating of greater than or equal to 1000 CFH shall demonstrate:

BPL $\leq$ 1.10 inches water column at a flow rate of 3,000 CFH or the maximum flow rating specified by the manufacturer, whichever is less, and BPL $\leq$ 0.05 inches water column at a flow rate of 30 CFH.

Meters with a manufacturer specified maximum flow rating of less than 1000 CFH shall demonstrate:

BPL $\leq$ 0.70 inches water column at a flow rate of 800 CFH and BPL $\leq$ 0.04 inches water column at a flow rate of 16 CFH.

The error of the meter shall be less than 5% of the true volume over the entire range of flow rates for which it will be used. (e.g. 2 to 5 cfm for the nozzle sleeve meter, 2 to 20 cfm for the vent sleeve meter, and 4 to 10 gpm for a meter installed in the VRS vapor return line.)

Meter(s) shall be equipped with taps to accommodate the following equipment:

(1) taps on the inlet side for

(a) a thermocouple with a range of 0 to 200 ^{o}F and

(b) a pressure gauge with a range selected to ensure that pressure readings are within 10 to 90% of the range of the gauge. (more than one gauge shall be used, if necessary) and

(2) taps on the inlet and outlet sides for a differential pressure gauge with a full scale range of less than or equal to four times the back pressure limit to allow detection of a pressure drop greater than the BPL.

(5) Pressure

Use a pressure measuring device (transducer, liquid manometer or Magnahelic gauge) with a design range suitable for the pressure being measured. The tap for the pressure measurement shall be located on the sample coupling attached to the inlet of the volume meter. The error of the pressure measuring device shall be no greater than 3% of the true pressure over the range of pressures to be quantified by the device.

(6) Temperature

Use a temperature measuring device (thermocouple or thermometer) with a design range suitable for the temperature being measured. The tap for the temperature measurement shall be located on the sample coupling attached to the inlet of the volume meter. The error in the temperature measuring device shall be no greater than 4 degrees Fahrenheit or 1.5 % of the true temperature whichever is greater.

5.1 Vehicle Leak Check Equipment

The following equipment is necessary to perform required vehicle leak checks; or to demonstrate the validity of results obtained using one of the alternative procedures.

5.1.1 Fill pipe Interface

A fill pipe interface shall be used which provides a seal at the fill pipe outlet except for:

(1) tubing for pressurizing the fill pipe and vehicle tank with nitrogen and

(2) tubing for connection to a pressure measurement device which can accurately register a pressure of 0.5 "WC in the fill pipe and vehicle tank.

5.1.2 Flow meter and Pressure Measurement Device

A flow meter and pressure measurement device shall be used which are appropriately sized for measuring 0.01 cfm (283 ml/min) and one-half (0.5) inches water column (gauge pressure) at the fill pipe interface.

The flow meter shall be calibrated against a bubble meter to determine the flow meter reading that corresponds to a nitrogen flow rate of 0.01 cfm (283 ml/min).

5.1.3 Pressure System

The pressure system shall provide for monitoring the pressure in the vehicle tank and the flow rate of nitrogen to the vehicle tank during the vehicle leak check. The pressure system for the vehicle leak check shall consist of a nitrogen cylinder (2000 psig, commercial grade), a two stage pressure regulator with gauges indicating cylinder pressure and supply line pressure, a coarse control valve for regulating the pressure in the supply line to the flow meter, a fine control valve for adjusting the flow through the flow meter, a pressure gauge (0 - 1 "WC) for determining the pressure in the vehicle tank and a hose for supplying nitrogen to the vehicle tank.

5.2 Nozzle Sleeve Leak Check Equipment

A volatile organic compound detector (also referred to as a combustible gas detector) which complies with the requirements of EPA Method 21 or ARB Test Procedure "TP-204.3, determination of Leak(s)" shall be used.

5.3 Sampling and Analysis Equipment at Test Point 1 (Nozzle-Fill Pipe Dispensing Interface)

5.3.1 Nozzle Sleeve and Sample Tubing

The sleeve is designed to collect the entire mass of gasoline vapor lost to the atmosphere at the at the dispensing area. An example design for the sleeve is shown in Figures 6 through 8.

Other designs may be used which accommodate different dispensing area geometry, subject to the requirement that other designs do not result in a vacuum level inside the sleeve that is greater the vacuum level produced in a sleeve of the design shown for sleeve sweep rates of up to five cubic feet per minute (cfm) of air flow. Compliance with this requirement must be documented in the required test report.

The design shown in Figures 6 through 8 has been tested, at a 5 cfm air sweep rate and shown to produce less than 0.01 "WC vacuum measured inside the sleeve, during use for balance nozzle testing. The comparison standard may differ for different nozzle types and vehicle geometry.

The sample tube connecting the sleeve to its instrumentation shall be as flexible and lightweight as practical so that the behavior of the nozzle operator is minimally affected

by testing activities. The unanalyzed portion of sample flow shall be discharged to the atmosphere.

In general, only a portion of the sleeve flow is used for the hydrocarbon concentration measurement. Most analyzers require a sample flow of approximately one to two liters per minute (0.04 to 0.08 cfm). Therefore, only a small fraction of the sleeve flow volume is analyzed. The sampling apparatus must be designed to ensure that a representative sample of the sleeve flow is routed to the analyzer.

5.3.2 Sleeve Sample Pump

Use a carbon vane or metal bellows pump (or other pump designs which do not provide a source of or sink for hydrocarbon vapors) to minimize contamination of the sample.

The pressure drop from a point inside the sleeve to the pump inlet is typically a few inches Hg, depending on tubing and fittings.

The pump must be capable of pulling about 5 cfm, but lower flow rates are acceptable subject to the requirement that the air flow rate through the sleeve must always be high enough to prevent the sleeve leak check from registering more than 10% of the LEL (2,100 ppm as propane).

When adjusting the air flow rate through the sleeve two points should be considered:

1. Lower sweep rates may result in less efficient collection of the mass emissions from the nozzle-fill pipe dispensing interface, which can introduce a low bias to the emission factor determined by this procedure.

2. Lower sweep rates result in less dilution of the hydrocarbon concentration in the sleeve and will produce a lower detection limit for the mass emissions that can be determined by the most sensitive analyzer available for sleeve concentration measurements.

5.3.3 Hydrocarbon Concentration

Use an array of two or three NDIR or FID that are capable of accurately quantifying the gasoline vapor concentrations (as propane) from 100 ppm to the highest concentration expected in the nozzle sleeve sample (typically 5% to 10%) Perform laboratory calibrations and field calibration checks with propane standards.

5.3.4 Nozzle Sleeve Volume Meter

(See Section 5 (4) Volume)

5.3.5 Nozzle Sleeve Volume Meter Pressure Measuring Device

Use a pressure measuring device (transducer, liquid manometer or Magnahelic gauge) with a design range suitable for the pressure being measured. The tap for the meter pressure measurement shall be located on the sample manifold coupling attached to the inlet of the volume meter.

The nozzle sleeve volume meter may be under significant vacuum if installed upstream of the sweep air pump. This will necessitate consideration of the meter vacuum when correcting the measured volume to the standard pressure condition of 29.92 " Hg. However, if the meter is downstream of the pump and the meter discharges directly to atmosphere the measurement of pressure at the meter inlet may be eliminated because the volume correction due to the maximum allowed BPL is insignificant (i.e. 1.1/13.6 << 29.92)

5.3.6 Nozzle Sleeve Meter Temperature

A thermocouple and a temperature readout device with a range of 0 – 200 degrees Fahrenheit is suitable for use. The thermocouple shall be located in the sample flow passing through the sample manifold coupling attached to the inlet of the nozzle sleeve volume meter.

5.4 Sampling and Analysis Equipment for Pressure Driven Fugitive Emissions

Use equipment specified in ARB test procedureTP-201.2F.

5.5 Sampling and Analysis Equipment for Test Point 3 (Vent)

5.5.1 Vent Sleeve and Sampling Apparatus

The technique used to quantify the mass of emissions at the vent pipe is analogous to the technique used at the nozzle-fill-pipe dispensing interface. An example design for the sleeve is shown in Figure 21. The sleeve is designed to collect the entire mass of gasoline vapor lost to the atmosphere at the at the tank vent. A sweep air flow of 2 to 20 cfm is drawn through inlet ports near the top of the sleeve and then through a perforated tubing coil surrounding the vent line emission source. From this coil the air is directed to a positive displacement meter and sampling manifold where the volume, temperature, pressure and Hydrocarbon concentration of the sweep air are measured.

Any vent sleeve used shall be designed and operated so that it does not produce a vacuum level greater than 0.01 "WC inside the sleeve and within one inch of the outer surface of the tank vent or tank vent PV-Valve. The vacuum inside the sleeve can be regulated by adjusting the flow rate of the sweep air or by adding additional inlet ports near the top of the sleeve.

Hydrocarbon measurement is accomplished by routing a sample of the sweep air from a point downstream of the volume meter to an array of hydrocarbon analyzers. In general, only a portion of the sleeve flow is used for the hydrocarbon concentration measurement. Most analyzers require a sample flow of approximately one to two liters per minute (0.04 to 0.08 cfm). Therefore, only a small fraction of the sleeve flow volume is analyzed. The sampling apparatus must be designed to ensure that a representative sample of the sleeve flow is routed to the analyzer.

5.5.2 Vent Sample Pump

Use a carbon vane or metal bellows pump (or other pump designs which do not provide a source of or sink for hydrocarbon vapors) to minimize contamination of the sample.

The pressure drop from a point inside the sleeve to the pump inlet is typically a few inches Hg, depending on tubing and fittings.

The flow rate should be adjustable from approximately 2 to 20 cfm. The air flow rate through the sleeve must always be high enough to prevent the presence of Hydrocarbon vapors at concentrations greater than 10% of the LEL (2,100 ppm as propane as determined by EPA Method 21) at the air inlet ports near the top of the vent sleeve.

When adjusting the air flow rate through the sleeve two points should be considered:

1. Lower sweep rates may result in less efficient collection of the mass emissions from the tank vent, which can introduce a low bias to the emission factor determined by this procedure.

2. Lower sweep rates result in less dilution of the hydrocarbon concentration in the sleeve and will produce a lower detection limit for the mass emissions that can be determined by the most sensitive analyzer available for sleeve concentration measurements.

5.5.3 Hydrocarbon Concentration

Use an array of two or three NDIR or FID that are capable of accurately quantifying the gasoline vapor concentrations (as propane) from 100 ppm to the highest concentration expected in the vent sleeve sample (typically 5% to 10%, although higher concentrations may be observed during a Phase I delivery or a short duration pressure release from an open PV valve) Perform laboratory calibrations and field calibration checks with propane standards.

5.5.4 Vent Sleeve Volume Meter

(See Section 5 (4) Volume)

5.5.5 Pressure

Use a pressure measuring device (transducer, liquid manometer or Magnahelic gauge) with a design range suitable for the pressure being measured. The tap for the pressure measurement shall be located on the sample coupling attached to the inlet of the volume meter.

The vent sleeve volume meter may be under significant vacuum if installed upstream of the sweep air pump. This will necessitate consideration of the meter vacuum when correcting the measured volume to the standard pressure condition of 29.92 “ Hg. However, if the meter is downstream of the pump and the meter discharges directly to atmosphere the measurement of pressure at the meter inlet may be eliminated because the volume correction due to the maximum allowed BPL is insignificant (i.e. 1.1/13.6 << 29.92).

5.5.6 Temperature

A thermocouple and a temperature readout device with a range of 0 – 200 degrees Fahrenheit is suitable for use. The thermocouple shall be located in the sample flow passing through the sample manifold coupling attached to the inlet of the nozzle sleeve volume meter.

5.6 Equipment for Test Point 4 (Vapor Processor Exhaust)

In some cases the equipment specified above for the quantification of volume, temperature, pressure, and hydrocarbon concentration at the tank vent test point may be applicable to the vapor processor exhaust (test point 4 in Figures 1 & 18). Alternate test apparatus used to quantify the exhaust volume from the vapor processor is also specified in EPA Method 2A. The equipment used to quantify the hydrocarbon concentration in the vapor processor exhaust is also specified in EPA Methods 25A and 25B. Further guidance on the determination of mass emissions at the vapor processor exhaust point is presented in ARB Test Procedure "TP-201.1A, Determination of Emission Factor for Phase I Vapor recovery Systems at Gasoline Dispensing Facilities".

See section 13, "ALTERNATIVE TEST PROCEDURES" if equipment specified above is not applicable.

5.7 Equipment for Test Point 4 (Vapor Incinerator Exhaust)

In most cases the equipment specified above for the quantification of volume, temperature, pressure, and hydrocarbon concentration at the tank vent test point will be applicable to the vapor incinerator inlet (test point 4a in Figures 1 & 18).

The equipment used to quantify the exhaust volume from the vapor processor is also specified in EPA Method 2B. The equipment used to quantify the hydrocarbon concentration in the vapor processor exhaust is also specified in EPA Methods 25A and 25B. The equipment used to quantify the carbon dioxide and carbon monoxide concentrations in the vapor processor exhaust is specified in EPA Method 10, with further guidance available in ARB Method 100.

See section 13, "ALTERNATIVE TEST PROCEDURES" if equipment specified above is not applicable.

5.8 Equipment for Additional Test Points Not used in Emission Factor Determination

5.8.1 Vapor Return Line

Sampling in the vapor return line is not necessary to determine the emission factor using this test procedure. However measurement of the volume of vapor returned to the underground tank form the nozzle–fill-pipe dispensing interface may be required to develop the system performance specification for the ratio of the vapor return volume to the dispensed liquid volume (V/L ratio), which characterizes the performance of some vacuum assist VRS.

5.8.1.1 In-line Plumbing

Design goals for plumbing arrangements, regardless of VRS and GDF design, are:

(1) Minimize length of vapor return line between the nozzle and the sample point for the vapor return line test point. Do this to minimize problems related to entry of condensation from the vapor return line into the vapor return line volume meter.

(2) Minimize the pressure drop for flow through in-line plumbing and the volume meter.

(3) Return the entire volume of any sample extracted from the vapor return line to prevent a negative bias in the VRS pressure and the mass of pressure driven fugitive emissions.

Furthermore, test apparatus plumbing shall be designed for easy adaptability to co-axial, twin hose, and any other GDF configurations which may be encountered. The plumbing shall be designed to protect the meter from being flooded with liquid gasoline in the event of an overfill event caused by topping off or a nozzle shut off failure. This shall be accomplished by insertion of a liquid trap at the lowest point in the plumbing installed on the inlet side of the meter. The liquid trap shall be transparent to allow a visual determination of the presence of liquid in the trap. The trap shall be designed to allow removal of liquid from the trap with minimal effort or tools. Ball valves shall be installed at the inlet to the liquid trap and at the exhaust of the vapor return line volume meter in order to isolate the meter from the VRS in the event that the meter requires servicing during the test. Such ball valves shall be sized to match the size of the vapor return line and test apparatus plumbing.

5.8.1.2 Hydrocarbon Concentration

Measurement of the hydrocarbon concentration in the vapor return line is not necessary to determine the emission factor using this test procedure. Therefore extraction of sample from the vapor return line for concentration measurement is generally undesirable due to the risk of biasing VRS operating parameters and performance by sample extraction and re-injection at the vapor return line test point. Nonetheless, upon adequate justification of necessity, the ARB Executive Officer may require the measurement of vapor return line hydrocarbon concentration on some or all of the required dispensing episodes upon which the emission factor determination is to be based. If hydrocarbon concentration measurement is to be performed, use a NDIR with a full scale value of 100.0%, or a lower value which is known to be above the maximum concentration possible at test conditions. Perform span and calibration checks with appropriate propane standards. The entire volume of sample extracted from the vapor return line must be returned to the vapor return line test apparatus plumbing. Steps must be taken to ensure that sampling and analysis do not significantly alter the temperature, pressure or hydrocarbon concentration of the sample when comparing these parameters at the point of extraction and reinjection to the vapor return line plumbing.

5.8.1.3 Vapor Return Line Volume Meter

See Section 5 (4) Volume

5.8.1.4 Vapor Return Line Volume Meter Pressure Measuring Device

Use a pressure measuring device (transducer, liquid manometer or Magnahelic gauge) with a design range suitable for the pressure being measured. The tap for the meter pressure measurement shall be located on the sample manifold coupling attached to the inlet of the volume meter.

5.8.1.5 Vapor Return Line Meter Temperature

A thermocouple and a temperature readout device with a range of 0 – 200 degrees Fahrenheit is suitable for use. The thermocouple shall be located in the vapor return flow through the sample manifold coupling attached to the inlet of the vapor return line volume meter.

5.8.2 Balance Nozzle Bellows Pressure

The pressure in the bellows of a balance VRS nozzle during the fueling episode is not necessary to determine the mass emission factor determined by this test method. However, the nozzle bellows pressure and sealing effectiveness of the nozzle faceplate directly effect the mass of emissions lost to the atmosphere at the nozzle-fill-pipe dispensing interface. Therefore, the measurement of the balance nozzle bellows pressure is required to develop a system performance specification for the dynamic back pressure that can be correlated with dispensing episodes that demonstrated compliance with the mass emission factor certification standard.

Figure 22 shows the test apparatus used to determine balance nozzle bellows pressure during fueling episodes included in the determination of the mass emission factor using this test procedure.

The bellows on the nozzle used at test point 1 must be modified by the addition of a pressure tap to allow the connection of tubing and a pressure measuring device to the nozzle bellows. The test apparatus must be designed so that there is no effect on nozzle performance and operating technique with regard to:

1. The compression force necessary to properly position the nozzle in a vehicle fill pipe.

2. The sealing effectiveness of the nozzle face plate against the vehicle fill pipe.

3. The pressure integrity of the nozzle bellows.

4. The ease of use for the person dispensing gasoline.

5. The relative position of the nozzle when properly inserted into a vehicle fill pipe.

Table 1, TP-201.2, Section 5
Typical Collection Sleeve and Analyzer Specifications
for NMHC (as C3H8) Analyzers Required for Motor Vehicle Fueling Emission Factor Test

Location of Collection Sleeve w/ air sweep	Analyzer Range	Analyzer Range Covered by Biennial Multi-Point Calibration	% of range required for 3 point pre and post test daily calibration (an upper span value less than 70 to 90% of range may be used if the measured concentrations do not exceed this upper span value)	Useable Concentration Range
Vent Line	0-5000 ppm	2 to 98%	0, 30 to 50%, 70 to 90%	100 to 4,900 ppm
Vent Line	0-8%	5 to 95%	same	4000 ppm to 7.6 %
Vent Line	0- 80%	5 to 95%	same	4.0 to 76%
Nozzle	0- 5000 ppm	2 to 98 %	same	100 to 4,900 ppm
Nozzle	0 – 8%	5 to 95 %	same	4000 ppm to 7.6%

Estimate of Theoretical Range of Quantifiable Vent Line Mass Emission Rates Using Specified Analyzers and 2 to 20 cfm Adjustable Sweep Rate:

Minimum: 0.0014 lb/hr (2 cfm sweep rate with [HC] = 100 ppm, 0.0013 cfm vent rate with [HC] = 15%, 1500 to 1 sweep ratio)

Note that a vent rate of 0.0014 lb/hr for 24 hr/day is a 0.13% efficiency loss for a 3500 gallon per day station, assuming an 7.6 lb/kgal uncontrolled emission factor

Maximum with 2 NDIR Ranges: 10.4 lb/hr (20 cfm sweep rate with [HC] = 7.6%, sleeve must be capable of collecting 100% of a 3.04 cfm (22.7 gpm) vent rate with [HC] = 50%, 6.6 to 1 sweep ratio)

Note that a vent rate of 10.4 lb/hr for 8 minutes/day is greater than 5 % efficiency loss for a 3500 gallon per day station, assuming an 7.6 lb/kgal uncontrolled emission factor

Maximum with 3 NDIR Ranges: 22.3 lb/hr (20 cfm sweep rate with [HC] = 16.25%, sleeve must be capable of collecting 100% of a 6.5 cfm (49 gpm) vent rate at 50% [HC], 3.1 to 1 sweep ratio)

Note that a vent rate of 22.3 lb/hr for 4 minutes/day is greater than 5 % efficiency loss for a 3500 gallon per day station assuming an 7.6 lb/kgal uncontrolled emission factor

Estimate of Theoretical Range of Quantifiable Nozzle-Fill Pipe Interface Mass Emission Rates Using Specified Analyzers and 2 to 5 cfm Adjustable Sweep Rate:

Minimum: 0.0014 lb/hr (2 cfm sweep rate with [HC] = 100 ppm, 0.0006 cfm emission rate with [HC] = 35%, 3300 to 1 sweep ratio)

Note that an emission rate of 0.0014 lb/hr for 467 minutes/day (approximate time necessary to dispense 3500 gallons) is a 0.04% efficiency loss for a 3500 gallon per day station, assuming an 7.6 lb/kgal uncontrolled emission factor

Maximum with 2 NDIR Ranges: 2.6 lb/hr (5 cfm sweep rate with [HC] = 7.6%, sleeve must be capable of collecting 100% of a 1.09 cfm (8.1 gpm) emission rate with [HC] = 35%, 4.6 to 1 sweep ratio)

Note that a vent rate of 2.6 lb/hr for 30 minutes/day (approximately the time needed to dispense 225 gallons) is greater than 5 % efficiency loss for a 3500 gallon per day station, assuming an 7.6 lb/kgal uncontrolled emission factor.

6 FIELD CALIBRATION PROCEDURE

A record of all calibrations shall be maintained.

6.1 Analyzers

Follow the manufacturer's instructions concerning warm-up time and adjustments. On each test day prior to testing, zero the analyzer with a zero gas and span with a known concentrations of calibration gas at levels which are 30 to 50% and 70 to 90 % of the highest concentration that is expected to be measured. The difference between the instrument response demonstrated during field calibration and the instrument response predicted from the biennial laboratory calibration curves (see Section 9, Quality Assurance) shall not exceed 2% of the instrument range.

Perform an intermediate zero and span calibration approximately 2 hours after the initial calibration and at any time a calibration drift is evident or suspected. Check for zero and span calibration drift at the end of the test period. All calibrations and adjustments shall be documented. To prevent the test data from being invalidated due to excessive zero or span drift, it is recommended that calibration checks be conducted every three to six hours.

6.2 Volume Meters

Positive displacement meters or turbine meters used for TP-201.2 shall be calibrated on an annual basis against a bell type spirometer at flow rates representing 1 , 10 , 30, 60, and 90% of the meter capacity. The accuracy of the meter shall be 5% of the true volume measured over the range of flow rates encountered in application of this test procedure.

6.3 Pressure Transducers

Prior to and immediately following each day of testing record the pressure measuring device response to the pressure generated by a static pressure calibrator at 0, 20,40,60,80, and 100% of the specified range of operation. If necessary, adjust the instruments response in accordance with manufacturer's instructions. Provide a copy of these instructions and document the instrument response before and after adjustment in the Certification Test Report.

6.4 Temperature Transducers

Every six months check the accuracy of the thermocouple and temperature readout device using an ice bath, ambient air, and boiling water. This accuracy check shall be conducted by comparison to a NIST traceable mercury-glass thermometer.

Check the accuracy of the thermocouple and temperature readout device against an NIST traceable mercury-glass thermometer at ambient air temperature prior to and immediately following each day of testing.

If necessary, adjust the temperature readout in accordance with manufacturer's instructions. Provide a copy of these instructions and document the instrument response before and after adjustment in the Certification Test Report.

7 PRE-TEST PROTOCOL AND DESIGN OF SYSTEM SPECIFIC TEST CONDITIONS

7.1 Location of Test Site

Prototype systems will be located within 100 miles of Sacramento for testing. If the applicant for certification provides information demonstrating that test site is not available within 100 miles of Sacramento, other locations may be accepted with written approval from the ARB Executive Officer.

7.2 Specification of Test, Challenge, and Failure Modes

General and System Specific challenge and failure operating mode scenarios may be required as part of the certification testing conducted to evaluate system compliance with the emission factor performance standard. In evaluating the application for certification the ARB Executive Officer shall determine the necessity of all challenge and failure mode operating scenarios presented herein. The ARB Executive Officer shall identify the required challenge and failure mode testing in the evaluation. The applicant for certification shall provide the ARB Executive Officer with any system design, operation or test data that are needed to accomplish this evaluation. Challenge and failure operating mode operating scenarios in addition to those presented herein may be required by the ARB Executive Officer.

7.2.1 Challenge Mode Testing

Challenge mode testing is necessary to evaluate the ability of the VRS to meet the emission factor performance standard over the entire range allowed for performance specifications that are to be included in the certification order.

The necessity of the following challenge mode scenarios shall be considered in the preliminary evaluation and may be required during or immediately following the application of this test procedure.

7.2.1.1 Nozzle Bellows Pressure (aka dynamic back pressure) for Balance Type VRS

Increased pressure in a balance type VRS nozzle bellows can cause an increase in the mass of hydrocarbon vapors lost at the vehicle-fill pipe dispensing interface. To evaluate the effect of the nozzle bellows pressure on the emission factor determined by TP-201.2, challenge mode testing shall be performed following the guidance presented below.

The pressure in test nozzle bellows during fuel dispensing shall be artificially increased to the maximum that will be allowed by the certification performance specifications. This shall be accomplished by installation of an adjustable flow restriction at vapor return line riser.

The maximum allowable bellows pressure during gasoline dispensing shall be specified by the applicant for certification and approved by Executive Officer.

Nozzle Bellows pressures increase in direct relation to the storage tank operating pressure. The ability of balance system to comply with the specified back pressure

limit shall be evaluated at the maximum allowable storage tank or system pressure to be specified in the certification order.

The maximum system pressures for a properly operating system during Phase II operations shall be specified by the applicant for certification and approved by Executive Officer. The maximum System pressures performance specification must be supported by the data collected during the 180 day continuous operational test of a system that met any applicable pressure integrity performance standards.

7.2.1.2 Vapor Return Volume to Dispensed Liquid Volume (V/L) Ratio for Vacuum Assist Type VRS with or without Vapor Processor or Vapor Incinerator

The V/L ratio of a vacuum assist system can affect the mass emission factor determined by TP-201.2 in two significant ways.

(1) Lower V/L ratios can result in correspondingly lower collection efficiencies and cause an increase in the mass of hydrocarbon vapors lost at the vehicle fill-pipe dispensing interface.

(2) Higher V/L ratios can increase the volume of vapor and air returned to the storage tank resulting in higher storage tank operating pressures and gasoline evaporation rates. The higher pressure can cause an increase in the mass of hydrocarbon vapors lost to the atmosphere through the tank vent and pressure driven fugitive emission sources.

To evaluated the effect of the V/L Ratio on the emission factor determined by TP-201.2 challenge mode testing shall be conducted during the application of this test procedure using the following guidance.

The V/L of the nozzle at test point 1 shall be set to less than 103% of the minimum V/L that will be allowed by the Certification performance specifications.

The V/L of the nozzles at all remaining dispensing points shall be set at greater than 97% of the maximum V/L that will be allowed by the Certification performance specifications.

The maximum and minimum V/L for a properly operating nozzle shall be specified by the applicant for certification and approved by Executive Officer. The V/L ratios specified must meet the following requirements:

V/L Ratio during Continuous Operation Test

During 180 day Continuous Operation Test the system must demonstrate a throughput weighted average V/L for all nozzles that is within 2% of midpoint of the allowable range of V/L ratios specified by the applicant for certification and approved by Executive Officer.

During 180 day Continuous Operation Test no individual nozzle shall demonstrate a V/L ratio that is more than 5% above or below the allowable range of V/L ratios specified by the applicant for certification and approved by Executive Officer.

V/L Ratio at GDF installations of the Certified System

The system must demonstrate a throughput weighted average V/L for all nozzles that is within 5% of midpoint of the allowable range of V/L ratios specified by the applicant for certification and approved by Executive Officer.

No individual nozzle shall demonstrate a V/L ratio that is more than 10% above or below the allowable range of V/L ratios specified by the applicant for certification and approved by Executive Officer.

The storage tank operating pressure can directly affect the V/L ratio of the VRS. Higher tank pressures can lead to reduced V/L ratios and a correspondingly lower collection efficiencies causing an increase in the mass of hydrocarbon vapors lost at the vehicle fill-pipe dispensing interface. The ability of a vacuum assist system to comply with the V/L performance specification shall be evaluated at the maximum allowable storage tank or system pressure to be specified in the certification order.

The maximum and minimum system pressures for a properly operating system during Phase II operations shall be specified by the applicant for certification and approved by Executive Officer. The system pressure performance specification must be supported by the data collected during the 180 day continuous operational test of a system that met any applicable pressure integrity performance standards.

7.2.1.3 Nozzle Dispensing Rate and Number of Nozzles in Simultaneous Use for Vacuum Assist Type VRS with Vapor Processor or Vapor Incinerator

A challenge mode scenario may be required during or immediately following the certification test which ensures that the vapor processor or vapor incinerator is challenged at the maximum allowed volumetric rate of vapor return from the dispensing islands. The effects of the following three parameters on the volumetric rate of vapor return must be evaluated.

1. Maximum dispensing rate through the nozzles.

2. Maximum V/L ratio for the dispensing nozzle

3. Maximum number of dispensing nozzles in simultaneous use

7.2.1.4 Vapor Piping Size and Configuration for Return, Manifold, and Tank Vent Lines for all VRS Types

Important: The following evaluation and the application of the specified challenge mode testing is required and must be performed if fugitive emission mass is to be determined by alternative methods involving removal of the PV-valve from the tank vent during the mass emission factor determination test.

A challenge mode scenario may be required during the certification test which ensures that the test site is equipped with the certified plumbing configuration with the largest expected positive bias on the mass of vent line emission measured during the test.

There are a significant number of plumbing configurations that have been previously certified for Gasoline Dispensing Facility Phase I and Phase II vapor recovery systems. Any of these configurations may be present at potential test sites being evaluated for use for this test procedure. It is possible for the size and configuration of vapor plumbing used for vapor return lines, tank manifolds and tank vent lines to influence the magnitude of the mass emissions from the vapor recovery system.

One example of influence is that the size of the piping and the presence of flow disturbances such as bends, valves, contractions and expansions will affect the pressure drop for flow through the vapor return lines. Higher pressure drops can cause a higher pressure at the nozzle fill-pipe dispensing interface leading to an increase in emissions at this location.

A second example is related to the path that vapors follow between the point of collection at the nozzle and the point of emission at the tank vent. Vapors passing through the storage tank are brought in contact with a large source (or sink) for gasoline vapor components. This proximity to the liquid reservoir can significantly increase, or possibly decrease, the vapor concentration when compared to the concentration at the nozzle entrance to the VRS. Conversely, the concentration of vapors which bypass the storage tank on the way to the tank are not significantly changed by contact with the liquid reservoir. The result is that the concentration and therefore the mass of vapors emitted at the tank vent can be significantly influenced by VRS plumbing configuration.

7.2.1.5 Effect of ORVR equipped Vehicles on Emission Factor for all VRS Types

A challenge mode scenario may be required during the certification testing to evaluate the effect of ORVR vehicle fueling on Phase II VRS emission factor determination. Such evaluation may focus solely on pressure driven fugitive emissions if the ARB Executive Officer determines that increased system pressure and fugitive emissions represent the only potential positive bias that ORVR vehicles can have on the mass emission factor determination. Challenge mode testing for ORVR impacts may be required during the 180 day operational test or during or immediately following the emission factor determination test. An ORVR impact determination may be required at an ORVR fraction of total GDF throughput that is equal to the current on road penetration of ORVR vehicles and/or the future ORVR fleet penetration level that has been determined to have the largest positive bias on the mass emission factor determined by this test procedure. Test protocols that address the following ORVR compatibility issues shall be developed by the applicant and approved by the ARB Executive Officer.

1. Methods of controlling the fraction of GDF throughput to ORVR Vehicles during testing.

2. Methods of predicting the level of future ORVR fleet penetration which will produce the largest positive bias on the mass emission factor determined by this test procedure.

3. Identification of the appropriate test phase for ORVR compatibility testing (i.e., during 180 day operational test, or during or immediately following the emission factor determination test).

4. Other issues identified in writing by the ARB Executive Officer as part of a preliminary evaluation of required testing necessary to obtain certification.

7.2.1.6 Phase I Delivery Frequency and Delivery Volumes for all VRS Types

A challenge mode scenario may be required during certification testing which specifies the Phase I delivery frequencies and delivery volumes. The ARB Executive Office shall establish the Phase II sensitivity to the frequency of Phase I deliveries and Phase I delivery volumes. During the certification test, these Phase I operating parameters shall be representative of the actual Phase I operations that occur at GDF installations of certified VRS which result in the largest expected positive bias on the mass emission factor.

In many cases the Phase I delivery operation can result in elevated VRS pressure being released to the cargo tank or to the atmosphere (either at the tank vent or at the Phase I vapor connection in the VRS.) The phase I delivery may also result in the removal of significant volumes of vapor that is below the concentration of vapors at equilibrium with the liquid gasoline in the tank. Removal of these unsaturated vapors reduces further gasoline evaporation and the corresponding increase in the storage tank pressure. The frequency and volume of the Phase I deliveries both affect the extent to which Phase I deliveries can lead to lower VRS pressures and emissions. Therefore these parameters should be controlled by the principals of challenge mode testing during the certification test.

7.2.1.7 Seasonal Variations in VRS performance

A challenge mode scenario may be required during certification testing which is designed to quantify the impacts of seasonal variations in parameters known to affect the mass emissions from GDF installations of certified VRS. Parameters that may require dual season evaluations include: RVP of summer and winter season gasoline, temperature of gasoline in the storage tank, temperature of gasoline in motor vehicle fuel tanks, and solar energy transfer to the storage tank and VRS. Note that the ability to conduct challenge mode testing for seasonal variations may be limited by the extent to which these parameters are outside the control of either the applicant for certification or the ARB Executive Officer.

7.2.2 Failure Mode Testing

Failure mode testing is designed to evaluate the ability of the VRS to meet the emission factor performance standard when the performance of the system is compromised by component or system failures that frequently occur at GDF installations of certified VRS.

Failure modes with a history of common occurrence that have been documented by the VRS inspection and testing programs conducted by the ARB and local APCD's and AQMD's, shall be evaluated.

The necessity of the following failure mode operating scenarios shall be considered in the preliminary evaluation and may be required during or immediately following the application of this test procedure.

7.2.2.1 System Pressure Integrity

Worn or damaged system components or Phase I system operator errors can result in a loss of system pressure integrity. Failure mode testing to determine the effect of a loss of system pressure integrity on the emission factor determined by TP-201.2 shall be conducted using the following guidance.

The minimum level of system pressure integrity that will be required by the certification order shall be simulated by the introduction of calibrated leaks in the VRS during failure mode testing. The minimum pressure integrity specification required for GDF installations of the certified VRS shall be specified by the applicant for certification and approved by the ARB Executive Officer.

For systems that are not equipped with vapor processors or vapor incinerator, the pressure integrity specification shall identify maximum allowable volumetric leak rates from the VRS at several pressure levels equally spaced between 0 “WC gauge pressure and the maximum allowable storage tank or system gauge pressure to be specified in the certification order.

For systems that are equipped with a vapor processor or vapor incinerator which result in the storage tank normally operating at a vacuum level, the pressure integrity specification shall identify maximum allowable volumetric leak rates into the VRS at several vacuum levels equally spaced over the range of allowable storage tank vacuum levels to be specified in the certification order.

7.2.2.1.1 System Pressure Integrity for Balance Type VRS

A loss of system pressure integrity for a Balance type VRS can affect the mass emission factor determined by TP-201.2 in two significant ways.

(1) The loss of pressure integrity in systems for which the normal operating pressure is at a slight vacuum level can result in an increased storage tank pressure. This will lead to higher nozzle bellows pressure during dispensing episodes which may cause an increase in the mass of hydrocarbon vapors lost at the vehicle fill-pipe dispensing interface.

(2) The loss of pressure integrity in systems for which the normal operating pressure is at a slight positive pressure can result in an increase in the mass of hydrocarbon vapors lost form the system through pressure driven fugitive emission sources.

7.2.2.1.2 System Pressure Integrity for Vacuum Assist Type VRS without Vapor Processor or Vapor Incinerator.

A loss of system pressure integrity for a Vacuum Assist Type VRS without Vapor Processor or Vapor Incinerator can affect the mass emission factor determined by this test procedure.

The loss of pressure integrity in systems for which normally operate at a positive pressure can result in an increase in the mass of hydrocarbon vapors lost to the atmosphere through the tank vent and pressure driven fugitive emission sources.

7.2.2.1.3 System Pressure Integrity for Vacuum Assist Type VRS with Vapor Processor or Vapor Incinerator.

A loss of system pressure integrity for a Vacuum Assist Type VRS with Vapor Processor or Vapor Incinerator can affect the mass emission factor determined by TP-201.2 in two significant ways.

(1) The loss of pressure integrity can cause a reduced vacuum level in the storage tank vapor space. This loss of vacuum may result in reduced V/L ratios which may cause correspondingly lower collection efficiencies and an increase in the mass of hydrocarbon vapors lost at the vehicle fill-pipe dispensing interface.

(2) The loss of pressure integrity can cause the ingestion of significant quantities of ambient air into the storage tank vapor space or system plumbing. Large quantities of ingested air may significantly reduce the hydrocarbon concentration of vapors entering the vapor processor and increase the volume of vapors entering the vapor processor, adversely affecting the performance of the vapor processor of vapor incinerator.

7.2.2.2 Damage to the Nozzle Components for Balance Type VRS

Damaged nozzle components that may result in reduced seal effectiveness and cause an increased level of mass emissions at the nozzle-fill pipe dispensing interface. The effect of such damage on the emission factor determined by TP-201.2 shall be evaluated during failure mode testing conducted using the following guidance.

The maximum damage that will be allowed by the certification order shall be simulated by creating a variety of holes, cuts loose or missing parts and other commonly occurring damage at the nozzle bellows and face plate of the dispensing nozzle at test point 1.

The maximum damage allowed shall be specified by the applicant for certification and approved by the ARB Executive Officer.

7.2.2.3 Damage to the Nozzle Components for Vacuum Assist Type VRS with and without Vapor Processor or Vapor Incinerator.

Damaged nozzle components that may result in reduced V/L ratio and cause an increased level of mass emissions at the nozzle fill-pipe dispensing interface. The effect of such damage on the emission factor determined by TP-201.2 shall be evaluated during failure mode testing conducted using the following guidance.

The V/L ratio for the test nozzle shall be adjusted to the lowest allowable level to be specified in Certification Order Equipment Specifications. With the V/L ratio adjusted in this manner, the maximum number of blocked vapor collection ports that will be

allowed by the certification order shall be simulated by blocking collection ports on the dispensing nozzle at test point 1.

The maximum number of blocked vapor collection ports allowed shall be specified by the applicant for certification and approved by the ARB Executive Officer.

7.2.2.4 Failures in Phase I Equipment or Operating Practices During Delivery for Vacuum Assist Type VRS with Vapor Processor or Vapor Incinerator.

Common Phase I equipment and operating procedure failure modes may adversely affect vapor processor and vapor incinerator performance during phase II subsequent to a Phase I delivery in which such failure modes were present. The effect of such Phase I failure modes on the emission factor determined by TP-201.2 shall be evaluated during failure mode testing conducted using the following guidance.

Phase II vapor processor performance evaluated following delivery events in which common Phase I failure modes are present. The following Phase I failure modes shall be evaluated to determine the effect on vapor processor or incinerator performance during subsequent Phase II dispensing operations.

1. Phase I Vapor Adapter poppet valve left open to atmosphere by disconnecting the vapor return line from the cargo tank before it has been disconnected from the storage tank. This failure mode may lead to abnormally low vapor concentrations and or abnormally high volumetric flow rates through the vapor processor or vapor incinerator.

2. Damaged fill adapter or fill hose connector allowing aspiration of air during delivery. This failure mode may lead to abnormally low vapor concentrations and or abnormally high volumetric flow rates through the vapor processor or vapor incinerator.

3. Cargo tank internal valve failure in partially or completely closed position or a blocked or disconnected Phase I vapor return line during the Phase I delivery . This failure mode may cause abnormally high system pressures and possibly abnormally high volumetric flow rates through the vapor processor or vapor incinerator.

7.3 System and Facility Preparation

The required preliminary evaluation shall set the final requirements for facility preparation. The guiding principle is that testing activities shall minimally alter facility and system conditions. The installation of test equipment can alter facility and system values for critical parameters (e.g. the release of pressure caused by opening the VRS plumbing to install test equipment at the vapor return line, tank vent, or vapor incinerator inlet). Therefore, final preparation procedures are specified herein. Alternate procedures may be applied subject to determination by the ARB Executive Officer that the alternative procedures are more effective or that the procedures specified below are not practical.

Facility Preparation Procedures

(1) Install all equipment and wait at least 16 hours before testing. Until then, provide conditions which minimally disturb facility and system operations due to the presence of such equipment for such time; or

(2) install all equipment and wait until the system pressure has returned to within the normal operating range established during the 180 day continuous operation test. Until then, provide conditions which minimally disturb facility and system operations due to the presence of such equipment. This alternative shall only be used after a determination, per the preliminary evaluation, that system pressure is the only system parameter disturbed by equipment installation.

Alternative (2) is not compatible with testing conducted on a system with an open vent pipe following the alternative procedure for determination of the fugitive emission mass per Section 8.2.3.

7.4 Testing Sequence

Important: Performance of TP-201.2 represents the applicant's largest single cost for required testing. As the applicant's candidate system must pass all required tests, costs for the applicant can be minimized by performing all other test procedures before the "emission factor" test specified in this procedure. In this way, if the system fails one of the less costly tests, required redesign and physical modification of the system can be performed prior to conducting this test procedure thus reducing the chances that the most expensive test procedure will need to be repeated.

Therefore, the testing sequence shall be as follows. All other required test procedures and other aspects of this test procedure shall be performed before the application of TP-201.2 to determine the Emission Factor (lb/kgal) for Motor Vehicle Fueling Operations at Gasoline Dispensing Facilities Equipped with Phase II Vapor Recovery Systems using the vehicle matrix specified in ARB test procedure TP-201.2A..

8 TEST PROCEDURE

The facility and system shall be prepared to operate according to any specified test procedures and any required challenge and failure mode operating scenarios.

Figure 1 illustrates mass emission test locations. Note that pressure driven fugitive emissions, which may occur at several dozen different component locations, are not directly measured and therefore the method of quantifying such emissions is not depicted in detail in the figure.

8.1 Test Point 1 (Nozzle Sleeve)

Figure 2 emphasizes the mass flux test location for Test Point 1 (Nozzle Sleeve).

8.1.1 Vehicle Leak Check Procedure

Three different procedures are presented for checking the pressure integrity of vehicle fill pipes and fuel systems. The first, the nitrogen flow pressurization method, is the

default method. Two alternative methods are also allowed on a vehicle by vehicle basis at the discretion of the ARB Executive Officer. The ARB Executive Officer may require that a vehicle leak check be performed using the Nitrogen Flow Pressurization Method upon identification of valid concerns for suspecting any inaccuracy of the vehicle leak check result determined by either Alternative Method.

(1) **Nitrogen Flow Pressurization Method**

Figure 3 and 4 illustrate test apparatuses for the following procedure, which is necessary to perform required vehicle leak checks; or to verify the results produced by an alternate procedure.

(a) Connect equipment for vehicle leak check to vehicle fill pipe.

(b) Open main valve on the nitrogen supply bottle. Use the two stage regulator to adjust the supply line pressure and the course flow control valve and the rotameter fine flow control valve to maintain a stable pressure reading of one-half (0.5) inches water (gauge) in the vehicle fill-pipe. If such pressure can not be maintained for 10 seconds, record an unacceptable vehicle leak for the subject vehicle.

Determine the leak rate by observing for the rotameter reading for 10 seconds. Record the rotameter reading.

(d) Disconnect equipment from the vehicle fill pipe and proceed with further test procedures.

(e) If a flow rate greater than 0.01 cfm (283 ml/min) was observed on the rotameter, record an unacceptable vehicle leak for the subject vehicle.

(2) **Alternative Method Based on Manual Compression without Nitrogen Flow**

Figure 4 illustrates the test apparatus used for the following procedure.

(a) Use a vapor tight, sealed, compressible device with an attached pressure gauge and seal the device against the vehicle fill pipe interface. A balance vapor recovery nozzle with the pressure gauge connected to the vapor return port has proven acceptable and is depicted in Figure 4. Note that the course control valve in the nitrogen supply line is closed during application of the manual compression method.

(b) Compress the device in a repeatable and controlled manner and record readings from the pressure gauge.

(c) If a stable pressure of 0.5” WC or greater can be observed on the pressure gage for at least 10 seconds with the manual compression device held in a fixed position, the compliance with the vehicle leak check has been demonstrated.

(d) Record passing results along with the observed fill-neck pressure reading.

(3) **Alternative Method Based on Audible Sound of Vehicle Tank Decompression**

Figure 5 illustrates the following procedure.

(a) Prepare to listen for a sound of vapor de-compression from the vehicle tank and fill pipe, before removing a vehicle fill pipe cap.

(b) Remove the cap in a quick, repeatable, and controlled manner and listen for a sound of vapor de-compression from the vehicle tank and fill pipe. Record a positive or negative result for the occurrence of such sound when the cap is removed.

(c) If an audible sound of pressure release from the vehicle tank is heard compliance with the vehicle leak standard has been demonstrated.

8.1.2 Nozzle Sleeve Assembly

The sleeve must be sampling around all potential vapor leak paths at all times during tested fuel dispensing episodes.

(1) **Sectional View of Sleeve**

Figure 6 illustrates a sectional view of a nozzle sleeve.

(2) **Axial View of Sleeve**

Figure 7 illustrates an axial view of a nozzle sleeve.

(3) **View of Sleeve on Nozzle**

Figure 8 illustrates a view of a nozzle sleeve on a nozzle.

8.1.3 Leak Check of Sleeve

At least once during each dispensing period readings must be taken with a leak detector per EPA Method 21. If possible, adjust the sleeve position and sleeve sweep rate so that the concentration readings are minimized. Concentrations greater than 10% of the LEL (2,100 ppm as propane) measured within one inch (2.5 cm) outside the sampling sleeve during a fueling episode shall be recorded.

Fueling episodes that do not conform with the nozzle sleeve leak check requirement will result in a low bias in the emission factor if included in the emission factor determination. As a result, the emission factor determined by inclusion of vehicles which fail the sleeve leak check will be lower than the true emission factor due to the failure of the test apparatus to capture and quantify the entire mass of emissions lost to the atmosphere at test point 1 during such dispensing episodes. Failure to meet the emission factor performance standard calculated by including test results from these vehicles in the calculation indicates that the true emission factor would also fail to meet the performance standard by an even larger margin.

(1) **View of Combustible Gas Detector**

Figure 9 illustrates a view of a combustible gas detector.

(2) **View of Combustible Gas Detector in Use**

Figure 10 illustrates a view of a combustible gas detector in use.

8.1.4 Nozzle Sleeve Measurements

The sleeve temperature and pressure measurements must be taken from a sample manifold attached to the inlet of the volume meter on the sleeve sampling system. The sample for the hydrocarbon concentration analyzer shall be taken at the exhaust side of the volume meter.

(1) **Volume Measurement**

Figure 11 illustrates equipment for volume measurements of samples from the nozzle sleeve.

(2) **Concentration Measurement**

Figure 12 illustrates equipment for concentration measurements of samples from the nozzle sleeve.

8.1.5 Dispensing Episodes

The tester begins data collection for a dispensing episode with the insertion of the nozzle into the vehicle and continues until the end of the "idle nozzle" monitoring period which is defined in the following section.

The nozzle user is instructed to insert the nozzle into the vehicle fill-pipe and dispense fuel in the user’s customary manner. The nozzle user shall and terminate dispensing in the user's customary manner. The tester shall instruct the user that upon deciding that termination is complete, the nozzle user shall so declare for the tester to hear.

To achieve this, the nozzle user shall be provided with simple, clear instructions prior to nozzle insertion. The same instructions shall be given before each dispensing episode.

The tester shall remove the nozzle from the vehicle fill pipe to minimize the chance of contaminating the nozzle sampling sleeve with liquid gasoline. Document any incident of liquid gasoline contamination on the nozzle sleeve.

After hearing that the user has terminated dispensing, the tester waits until the end of the "idle nozzle monitoring period" (defined in Section 8.1.6) and then ends data collection for the dispensing episode.

The sleeve must always be at the fill pipe/nozzle interface for sample collection during any dispensing episode.

Sample at a nominal flow rate of 5 cfm, or less subject to the requirement that the sleeve leak check is less than 0.1% LEL (2,100 ppm as propane).

8.1.6 Idle Nozzle Monitoring Period

Mass emissions collected by the nozzle sleeve shall be monitored for a defined time period following the termination of gasoline dispensing. The purpose of this “idle nozzle” monitoring period is to quantify the mass emissions at the idle nozzle that are directly associated with the individual fuel dispensing episodes tested. The idle nozzle monitoring period is not intended to quantify emissions from idle nozzles that are quantified by procedures used to determine pressure driven fugitive emissions for which the test nozzle is one of several dozen potential emission points.

Target hydrocarbon emissions for the idle nozzle monitoring period include vapors that remain in the nozzle components, the vapor path of the coaxial hose and dispenser plumbing that are on the ambient side of the nozzle or dispenser mounted vapor check valves at the moment the fueling episode is terminated. Hydrocarbon vapors still present in the nozzle sleeve sampling apparatus at the moment the fueling episode is terminated are also targeted for measurement by the idle nozzle monitoring period.

After gasoline dispensing is terminated by the nozzle user, the nozzle sleeve shall remain in place and sampling shall be performed with the nozzle in its idle position. (A nozzle in its idle position is either hung in the dispenser or manually held at the same height and orientation as when it is hung in the dispenser) Idle nozzle sampling shall be performed for a time period equivalent to the longest of three specified time periods:

1. A two minute time period beginning at the time fuel dispensing is terminated.

2. The time period required for the sleeve sample concentration to fall below 100 ppm after fuel dispensing is terminated. (To put the emission rate occurring at the end of the idle nozzle period in perspective, note that a concentration of 100 ppm and a sleeve sample rate of 5 cfm would result in approximately 0.08 lb HC/day, if the concentration in the idle nozzle sleeve sample remained at 100 ppm for 24 hours per day. This emission rate can be equated to an approximate loss in VRS efficiency of 0.3 % for a 3500 gallon per day throughput and an uncontrolled emission factor of 7.6 lb/kgal)

3. The sleeve “response time” defined as follows. Introduce ambient air from a location removed from any potential gasoline vapor source into the sleeve until the analyzer reading has stabilized at a level at or near zero, then quickly move the sleeve to a position over an open container of gasoline or other HC source that has been demonstrated to produce vapor concentrations within the range of the sleeve HC analyzers. Measure the time interval from the time the sleeve was moved to the vapor source to the time that 90% of the final stable analyzer reading is observed on the analyzer output signal. Perform this test sequence three times, calculate the average, and define the result as the "response time”.

8.2 Pressure Driven Fugitive Emission Mass Determination Procedures

8.2.1 Test Procedure for Determination of the Fugitive Emission Mass from Phase II VRS

ARB test procedure TP-201.2F provides the default test procedure for determining fugitive emissions. The fugitive emission mass is determined by TP-201.2F using

calculations based on leak rate versus system pressure correlation equations developed from system pressure integrity testing data (aka static pressure decay testing data), along with temporal data on the system pressure profile and the system hydrocarbon concentration.

Note that any errors introduced into the mass emission factor determined by TP-201.2 by a failure of the fugitive emission calculation to accurately predict leak rates and mass emissions from the VRS can be minimized by minimizing the mass fugitive emissions during the application of TP-201.2. The applicant may be able to accomplish this through careful design, component selection, and construction of the VRS which results in the highest possible level of pressure integrity for the VRS and/or the lowest possible normal operating pressures for the VRS.

8.2.2 Fugitive Emissions from VRS with Vapor Processor or Vapor Incinerator

Note that the mass of pressure driven fugitive emissions is defined as zero for VRS with vapor processors or vapor incinerators that are capable of maintaining a measurable vacuum in the storage tank and VRS at all times during Phase II operations and when the GDF is idle. An exception from the “vacuum at all times” requirement may be proposed by the applicant and approved by the ARB Executive Officer for short pressure excursions during and immediately following Phase I gasoline transfer operations.

8.2.3 Alternative Procedure for Determination of Fugitive Emission Mass

An alternative procedure to TP-201.2F is presented here. Application of the alternative procedure may be requested by the applicant and approved by the ARB Executive Officer. The applicant may be able to reduce the cost of emission factor determination testing by application of the alternate method. Cost reduction may be realized because no additional testing and analysis equipment or procedures (i.e. those associated with TP-201.2 F) are required for application of the alternative method.

The ARB Executive Officer may require application of the alternative method upon making a determination that the VRS to be tested is incompatible with the application of TP-201.2F. A system may be determined to be incompatible with the default test procedure if it is found that the static pressure decay testing, upon which the calculated fugitive emissions are based, is not representative of the actual system pressure integrity during the time period for which the temporal pressure profile, calculated leak rates and mass of pressure driven fugitive emissions are to be determined. This situation may arise when significant number of intermittent leak sources are present in the VRS. (One example of this situation would be bellows actuated vapor check valves for which the sealing effectiveness may be affected by the manner in which the nozzle is handled by the user and replaced in the dispenser.)

The alternative procedure is based on the eliminating virtually all of the pressure driving force at potential fugitive leak sources by testing the system with an open tank vent (i.e. with the PV valve removed) during the emission factor determination test. Fugitive emissions from the 30 to 40 VRS components that may leak when the system is at a positive pressure are defined as insignificant when testing is conducted with an open tank vent. Removal of the PV valve directs all "fugitive emissions" to the open tank vent. Since the tank vent is outfitted with the sampling and analysis test apparatus required by

the emission factor determination test procedure, directing fugitive emissions to this test point allows the use of direct measurement to quantify the fugitive emission mass.

Because pressurization of the storage tank and VRS is primarily related to the volume and concentration of the vapor returned to the tank by the Phase II VRS, it is important to ensure that all parameters that significantly influence vapor return volume and concentration are identical for the Phase II VRS operations observed during the 180 day operational test with the PV Valve installed, during a mass emission factor determination test conducted without the PV valve, and during the operation of GDF installations of the certified VRS with the PV valve installed.

Important: The influence of underground piping configuration on tank vent hydrocarbon concentrations and therefore, tank vent mass emissions, may be greater with an open vent pipe than when the tank vent is controlled by a PV Valve. The challenge mode evaluation and testing presented in Section 7.2.1.4 shall be required for any test in which fugitive emission determination is to be conducted using the open vent pipe alternative procedure.

There are a limited number of VRS parameters (primarily the V/L ratio for assist systems and the nozzle sealing effectiveness and bellows pressure for balance systems) which control the volume and concentration of the vapors returned to the storage tank from the dispensing nozzles. The preliminary evaluation and ultimately the certification order, shall ensure that the same set of specifications for these parameters will be met during all four testing and operational phases listed below:

1. A 180 day continuous operational test with the PV valve installed and a level of system pressure integrity that can be continuously documented.

2. An ORVR compatibility demonstration conducted during the 180 day operational test.

3. A TP-201.2 Phase II emission factor determination test with an open vent pipe allowing direct measurement of pressure related fugitive emissions.

4. Actual in use operations with PV Valve installed in which the pressure integrity may range from a system capable of demonstrating compliance with the performance standard for static pressure performance to a failure mode operating scenario in which there is a complete loss of pressure integrity.

If the system parameters meet the specifications during all testing and operational phases listed above, then certification and testing has established that the emissions measured during an open vent pipe emission factor test demonstrating compliance with the emission factor performance standard will be greater than or equal to the emissions from GDF installations of the certified system.

8.3 Test Point 3 or 4 (Vent or Vapor Processor)

Figure 18 emphasizes mass emission test locations for test point 3 (vent), test point 4 (vapor processor) and test points 4a and 4b (vapor incinerator). Separate procedures are specified in Section 8.4 for a vapor incinerator.

Test point 3 shall always be at the outlet from the tank vent(s). The operation of test equipment shall not interfere with the normal operation of any PV valve installed on the tank vent(s).

In this section, the term "vent" and the specified procedures for testing vents shall also apply to any vapor processor with which such procedures are compatible. It is possible that the use of the vent sleeve apparatus may be incompatible with some vapor processors. In this case, the vapor processor exhaust volume may be quantified by direct measurement through application of EPA Method 2A and the concentration in the vapor processor exhaust stream shall be quantified by EPA method 25A or 25B. Further guidance on testing vapor processor exhaust points is presented in ARB Test Procedure TP-201.1A

The method of addressing vent line PV valve emissions during application of TP-201.2 in testing VRS with a vapor processor (or vapor incinerator) shall be proposed by the applicant and approved by the ARB Executive officer in the preliminary evaluation.

There are some vapor recovery system designs which may necessitate the simultaneous testing of both the tank vent and the vapor processor (or vapor incinerator). Simultaneous testing of points 3 and 4 (or 4a and 4b) would be necessary if the system operating parameters result in positive gauge pressure in the storage tank and VRS. In this case the fugitive leaks from the closed PV valve or emissions from an open vent valve could be of sufficient mass to significantly effect the mass emission factor determined by application of TP-201.2. Conversely, vapor recovery system designs in which the vapor processor (or vapor incinerator) maintains a constant vacuum in the storage tank and VRS will not produce vent line emissions and the simultaneous monitoring of the vent PV valve may be deemed unnecessary. Significant savings in cost and effort may be recognized by eliminating the simultaneous monitoring of both vent line and vapor processor (or vapor incinerator) emissions if such monitoring is deemed unnecessary by the ARB Executive Officer.

Any vapor processor which is incompatible with the application of TP-201.2 shall not be certified until the compatibility requirements included in the certification procedures are met.

Further guidance on test procedures that may be adaptable to the determination of mass emissions from vapor processors at GDF installations of Phase II VRS can be found in ARB test procedure test procedure TP-201.1A

The substitution of any test procedures for the test procedures presented in this section shall be done in accordance with Section 13, Alternative Test Procedures.

8.3.1 Vent Sleeve Installation for Multiple Tank Vents connected by a Manifold

Figure 19 illustrates installation of the vent sleeve apparatus for sampling and analysis of multiple tank vents connected by a manifold at test point 3.

8.3.2 Vent Sleeve Installation for a Single Tank Vent

Figure 20 illustrates installation of the vent sleeve apparatus for sampling and analysis of a single tank vent at test point 3.

8.3.3 Volume Measurement of the Vent Sleeve Sample

Figure 11 illustrates equipment for volume measurements of the vent sleeve sample.

8.3.3 Concentration Measurement of the Vent Sleeve Sample

Figure 12 illustrates equipment for concentration measurements of the vent sleeve sample.

8.3.4 Evaluation of and Specification of Critical Vapor Processor Operating Parameters

8.3.4.1 Challenge and failure mode testing of vapor processor performance shall be designed, specified and conducted following the guidance presented in Section 7.

8.3.4.2 Vapor Processor Evaluation and Testing

The vapor processor shall be evaluated and tested to determine any performance specifications that are deemed necessary by the ARB Executive Officer to ensure that GDF installation of the certified VRS are operated in a manner consistent with the operation of the vapor processor during TP-201.2 certification testing. The following performance specifications may warrant evaluation:

(1) a performance specifications for time averaged hydrocarbon concentration (as propane) in the vapor processor exhaust stream and

(2) a performance specifications for other critical vapor processor operating parameters such as: maximum and minimum volumetric vapor processing rates, internal processor temperatures and pressures, vacuum pump and/or compressor speed and inlet and/or exhaust pressures and any other vapor processor operating parameters that influence the performance of the vapor processor.

The results of evaluation and testing of the system, shall be documented in the certification test report and shall include:

(1) the identification of critical vapor processor operating parameters,

(2) the performance specifications for critical vapor processor operating parameters, that will be required by the certification order and

(3) the specification of any necessary monitoring and alarm requirements for temperatures, pressures, hydrocarbon concentration, vacuum pump or compressor operating parameters, and other critical vapor processor operating parameters that influence the performance of the vapor processor and will be specified in the certification order.

8.4 Test Points 4a and 4b (Vapor Incinerator Inlet and Exhaust)

8.4.1 General Sampling Parameters for Vapor Incinerators

During testing, continuous measurements shall be recorded for the following system parameters shown in the hexagon outlines in Figure 18:

HC	=	Hydrocarbon Concentration at inlet and exhaust test points
CO	=	Carbon Monoxide Concentration at exhaust test point
CO_2	=	Carbon Dioxide Concentration at exhaust test point
V	=	Volume at inlet test point
P	=	Meter Pressure at inlet test point
T	=	Meter Temperature at inlet test point

8.4.2 Incinerator Sampling Parameters

An evaluation of incinerator design and operating parameters shall be conducted to determine specific testing protocols. The evaluation shall include specifications for appropriate data collection time intervals and appropriate ranges or capacities for the devices used to determine temperature, pressure, concentrations, and volume. The time intervals specified for data averaging or intermediate mass emission calculations shall be chosen to produce calculated estimates of incinerator mass emissions factors which can be shown to be accurate to $\pm$ 10% of the true emission factor, based on sound scientific and engineering principles. The concentration and volume measurements made at the incinerator inlet must be contemporaneous with the measurements of concentration made at the incinerator exhaust to produce an accurate result for the calculated exhaust volume. This is especially important during time periods when concentrations or volumetric flow rate are changing rapidly (e.g. cold start ups). Instrument response times must be considered when correlating contemporaneous data at the inlet and exhaust test points.

Data for each parameter shall be collected and recorded for the appropriate time intervals determined as specified above. Collect and record incinerator data for all of the parameters required to make a determination of the incinerator exhaust volume as required by EPA Method 2B.

This test procedure also includes additional monitoring requirements for auxiliary fuel (if present) to expand the applicability of EPA Method 2B. Some vapor incinerators may use auxiliary fuel (typically natural gas, propane, or LPG) to accomplish faster ignition and more complete combustion of the gasoline vapors controlled by the incinerator. In this case it is necessary to quantify the additional incinerator exhaust volume associated with the combustion of the auxiliary fuel. The parameters that must be monitored are defined below:

V_{in} = total inlet volume processed by vapor incinerator (SCF)

V_{fvs} = inlet volume of gasoline vapors from the facility vapor space, storage tanks and vapor recovery system (SCF)

V_{af} = inlet volume of auxiliary fuel (SCF)

V_{exh} = vapor incinerator exhaust volume (SCF)

N = number of carbon atoms in each molecule of calibration gas for analyzers used to determine concentration of gasoline vapors at the incinerator inlet and exhaust (normally propane, N = 3)

N_{af} = number of carbon atoms in each molecule of calibration gas for analyzers used to determine concentration of auxiliary fuel at the incinerator inlet

$[HC]_{fvs}$ = hydrocarbon concentration of inlet volume from the facility vapor space (volume fraction = volume % / 10^2)

$[HC]_{af}$ = hydrocarbon concentration of auxiliary fuel (volume fraction = volume % / 10^2)

$[HC]_{exh}$ = vapor incinerator outlet hydrocarbon concentration (volume fraction = ppm / 10^6)

$[CO_2]$ = vapor incinerator outlet carbon dioxide concentration (volume fraction = volume % / 10^2)

[CO] = vapor incinerator outlet carbon monoxide concentration (volume fraction = ppm / 10^6)

8.4.3 Simplifying Assumptions for Incinerator Testing

Based on an engineering evaluation of a subject incinerator, the ARB Executive Officer may allow other data sources or simplifying assumptions to be used in place of actual sample collection and analysis. Monitoring of some or all of the auxiliary fuel parameters and other incinerator parameters may be deemed unnecessary if the applicant submits adequate justification based on the application of sound scientific and engineering principles and obtains prior written approval from the ARB Executive Officer. Possible simplifying assumptions for incinerator testing that may be given consideration by the ARB Executive Officer are presented below:

1. It may be possible to use concentration and hydrocarbon speciation data provided by the auxiliary fuel supplier in place of actual measurements for the $[HC]_{af}$ parameter.

2. For incinerators that are operated at a constant volumetric feed rate, the inlet volume of auxiliary fuel, V_{af}, may be accurately predicted based only on the incinerator operating time and the feed blower performance specifications and operating parameters (inlet volumetric flow rate, fan speed, blower inlet pressure, etc.)

3. An engineering evaluation may demonstrate that the additional exhaust volume associated with the use of auxiliary fuel is insignificant (i.e. does not effect the incinerator mass emission factor by greater than 5%)

4. The monitoring of carbon monoxide concentration, [CO], may be eliminated in the application of EPA Method 2B if it can be shown that deleting the carbon monoxide concentration from the carbon balance equation used to calculate the incinerator exhaust volume does not result in a significant loss of accuracy (i.e. does not effect the incinerator mass emission factor by greater than 5%). Typically this simplification may be applied when the carbon monoxide concentration is much less than the carbon dioxide concentration in incinerator exhaust. (e.g. 50 ppmv CO << 2% by volume CO_2). Note that [CO] monitoring may still be required to develop a performance specification for time averaged carbon monoxide concentration in the incinerator exhaust stream as discussed in Section 8.4.1.

5. An engineering evaluation may demonstrate that the additional exhaust volume from the auxiliary fuel occurs in a fixed ratio ($R = V_{exh\ f(Vaf)} / V_{exh\ f(Vfvs)}$) to the incinerator exhaust volume associated with combustion of vapors from the facility vapor space, storage tanks and VRS. In this case, the total exhaust volume ($V_{exh,total}$) can be calculated from the exhaust volume determined by application of EPA Method 2B to the vapors entering the incinerator from the GDF vapor space ($V_{exh\ f(Vfvs)}$) and the known value of R as follows:

$$V_{exh,total} = [R+1] \times V_{exh,\ f(V_{fvs})}$$

Where: $$V_{exh,total} = V_{exh,\ f(V_{fvs})} + V_{exh,\ f(V_{af})}$$

And $$R = \frac{V_{exh,\ f(V_{af})}}{V_{exh,\ f(V_{fvs})}}$$

8.4.4 Incinerator Visual Emissions

Visible emissions (except water vapor) from vapor incinerators are an indication of poor combustion.

No vapor incinerator shall discharge into the atmosphere any air contaminant, other than uncombined water vapor, for a period or periods aggregating more than three minutes in any one hour which as dark or darker in shade as that designated as No. 1 (one) on the Ringleman Chart, as published by the United States Bureau of Mines, or for any period of fifteen consecutive seconds or greater, any air contaminant, other than uncombined water vapor, which is as dark or darker in shade as that designated as No. 2 (two) on the Ringleman Chart, as published by the United States Bureau of Mines

Should these levels of visible emissions from the vapor incinerator exhaust be detected, the control system is unacceptable and the problem must be corrected and an application made to the ARB Executive Officer for reconsideration for certification.

8.4.5 Incinerator Inlet Sample Location

The vapor incinerator inlet sample and temperature and pressure measurements must be taken from a sample manifold attached to the inlet side of the volume meter which has been inserted at a break in the inlet line. The installation of test equipment shall not interfere with the normal operation of the vapor incinerator. The total volume of sample taken from the incinerator inlet for the purpose of hydrocarbon concentration measurement must be returned, unaltered, to the sample manifold. This is necessary in order to avoid the risk of any bias in the system pressure or incinerator mass emission caused by application of this test procedure.

8.4.6 Incinerator Exhaust Sample Location

The vapor incinerator exhaust sample must be taken from the exhaust stack downstream of the burner far enough to permit complete mixing of the combustion gases. A sampling point which is at least eight stack diameters downstream of any flow disturbance, and two diameter upstream of any flow disturbance is desirable. Flow disturbances of concern include a bend, expansion, or contraction in the stack, the stack exhaust point, and the location of a visible flame.

If the "8 and 2 criteria" cannot be met, a sampling point which is at least two stack diameters downstream of any flow disturbance and one diameter upstream of any flow disturbance may be used. Any alternative sampling locations which do not meet these minimum criteria must be approved by the ARB Executive Officer on the basis of adequate justification, submitted by the applicant. This justification must include analysis, based on sound scientific and engineering principals, to demonstrate that an incinerator stack with sampling ports which meet the minimum criteria are not feasible for GDF installations of the certified VRS. In any event, the sample point shall be no less than one half diameter from the stack exit and one stack diameter above the high point of the visible flame and be at a point of maximum velocity head, normally the center or the stack.

(Further guidance on sampling locations for gaseous pollutant concentration monitoring can be found in 40CFR Pt.60 App. A, Meth. 1 and App. B, Spec 2)

Note that any use of temporary stack extensions or other apparatus installed solely for the purpose of source testing shall not be allowed if there is evidence indicating that the quantity or chemical structure of the incinerator emissions will be altered by the presence of such apparatus.

Vapor incinerator emissions shall be monitored for a minimum time period of 24 hours beginning at the time of the first dispensing episode.

8.4.7 Incinerator Performance Specifications

The vapor incinerator shall be evaluated and tested to determine any performance specifications that are deemed necessary by the ARB Executive Officer to ensure that GDF installation of the certified VRS are operated in a manner consistent with the operation of the vapor incinerator during certification testing following TP-201.2. The following performance specifications may warrant evaluation:

(1) a performance specification for time averaged hydrocarbon concentration (as propane) in the incinerator exhaust stream and

(2) a performance specification for time averaged carbon monoxide (CO) concentration in the incinerator exhaust stream and

(3) performance specifications for other critical incinerator operating parameters such as: maximum and minimum volumetric vapor processing rates, exhaust stack temperatures, vapor feed blower fan speed and inlet pressure etc.

The results of evaluation and testing of the system shall be documented in the certification test report and shall include:

(1) the identification of the critical incinerator operating parameters,

(2) the performance specifications for the critical incinerator operating parameters, and

(3) the specification of any necessary monitoring and alarm requirements for temperature, pressure, hydrocarbon and/or carbon monoxide concentration, feed blower operating parameters, and other critical incinerator operating parameters. indicating gauges, detection devices, and alarms

8.5 Treatment of Phase I Generated Emissions

Exclusion of Phase I Delivery Generated Emission Mass from Emission Factor Determination

Phase I generated emissions are defined as emissions which occur at tests points 2 through 4b while gasoline is being transferred to the GDF storage tanks. These emissions also may include emissions which occur after a Phase I delivery while the storage tanks are at an elevated pressure greater than that which existed immediately prior to the start of the Phase I delivery operations. (Note that the ball valves shown on the vent line test apparatus in Figures 19 and 20 make it possible to redirect Phase I generated emission away from the vent sleeve during phase I deliveries.) The mass of Phase I generated emissions may be subtracted from the total mass determined at test points 2 through 4b prior to calculation of the Phase II VRS mass emission factor. provided all of the following conditions are met:

1. All Phase I deliveries occurring during the emission factor test must be monitored by the ARB Executive Officer or video taped by closed circuit TV.

2. All Phase I deliveries occurring during the emission factor test shall be conducted using a Cargo Tank Phase I VRS for which compliance with all the requirements of ARB certification procedure “CP-204, Certification Procedures for Vapor Recovery Systems of Cargo Tanks” has been demonstrated and documented within 2 weeks prior to the start of TP-201.2 testing.

3. The applicant for certification has fully documented that all the above conditions have been met and has fully documented the methodology used to quantify the excluded mass of Phase I delivery generated emissions.

4. The applicant has obtained written approval from the ARB Executive Officer for the exclusion of any Phase I delivery generated emissions that occur during TP-201.2 testing.

8.6 Additional Test Points Not Necessary for Determination of the Emission Factor

8.6.1 Vapor Return line Test Point

Figure 13 emphasizes test locations for the additional test point at the Vapor Return Line.

The volume meter is inserted at a break in the vapor return line. The break is usually at the vapor hose or dispenser vapor manifold connection to the vapor riser from the underground plumbing. When options are available, the sampling location shall be the shortest practical downstream distance from the nozzle to minimize vapor condensation upstream of the sampling location.

The vapor return line temperature and pressure measurements and, if required, the sample for the hydrocarbon concentration measurement are taken from a test manifold attached to the volume meter.

8.6.1.1 Volume Measurement

Figure 14 generally illustrates equipment for volume measurements of samples from the vapor return line.

Volume Measurement, Single Vapor Return Line

Figure 15 illustrates installation of the equipment for volume measurements in a single vapor return line.

Volume Measurement, Multiple Vapor Return Lines Connected by a Manifold

Figure 16 illustrates installation of the equipment for volume measurements in the manifold connecting multiple vapor return lines.

8.6.1.2 Concentration Measurement

Figure 17 illustrates equipment for concentration measurements of samples from vapor return lines.

The measurement of concentration in the vapor return line is not required to determine the mass emission factor for which TP-201.2 is applicable. However, a determination of vapor return line concentration may be required by the ARB Executive Officer for some or all of the monitored dispensing episodes if such data is necessary for the development of system specific performance specifications.

If a sample is extracted from the vapor return line for the purpose of hydrocarbon concentration measurement, the total volume of sample taken must be returned, unaltered, to a sample manifold attached to the exhaust side of the volume meter. This is necessary to ensure that the system pressure and tank vent or fugitive mass emissions are not biased low by application of this test procedure.

If hydrocarbon sampling is required at the vapor return line it is recommended that the sample and sample return pumps be shut down during idle periods between

dispensing episodes. It is also recommended that isolation valves be installed in the sample and sample return lines and that these valves be closed during idle periods. Isolation valves will prevent the migration of vapor under pressure in the vapor return line into the analyzer sample manifold where it may condense if cooler temperatures exist in the test van.

The isolation valves will also prevent the entrance of calibration gases into the vapor recovery system through the sample return line when calibrations are performed during idle periods. A temporary path to atmosphere for calibration gases must be provided to allow flow through the analyzers during calibration.

It is important that the analyzer sample, sample return, and calibration sample plumbing is designed such that the flow rate through the analyzer (as verified by the rotameter at the inlet of the analyzer) and the pressure of the hydrocarbon sample or calibration gas in the analyzer (as verified by the pressure gauge at the exhaust line of the analyzer) are identical during both sampling and calibration. Failure to meet this criteria can produce an analyzer response during sampling which is inconsistent with the analyzer calibration.

Prior to each dispensing episode the liquid trap installed at the entrance to the vapor return line meter shall be observed to determine the presence of large volumes of liquid that could significantly alter the pressure drop for flow through the apparatus or the concentration of vapors in the test manifold.

8.6.2 Balance Nozzle Bellows Pressure Test Point

The pressure in the bellows of a balance VRS nozzle during the fueling episode is not necessary to determine the mass emission factor for which TP-201.2 is applicable. However, the nozzle bellows pressure and sealing effectiveness of the nozzle faceplate directly effect the mass of emissions lost to the atmosphere at the nozzle-fill-pipe dispensing interface. Therefore, the measurement of the balance nozzle bellows pressure is necessary during TP-201.2 testing to develop system specific performance specifications for the nozzle bellows pressure that can be correlated with mass emissions.

Figure 22 shows the test apparatus used to determine balance nozzle bellows pressure during fueling episodes included in the determination of the mass emission factor for which TP-201.2 is applicable.

The bellows on the nozzle used at test point 1 must be modified by the addition of a pressure tap to allow the connection of tubing and a pressure measuring device to the nozzle bellows. The test apparatus must be designed so that there is no effect on nozzle performance and operating technique with regard to:

1. The compression force necessary to properly position the nozzle in a vehicle fill pipe.

2. The sealing effectiveness of the nozzle face plate against the vehicle fill pipe.

3. The pressure integrity of the nozzle bellows.

4. The ease of use for the person dispensing gasoline.

5. The relative position of the nozzle when properly inserted into a vehicle fill pipe.

8.7 Other Sampling Parameters

8.7.1 General

Barometric Pressures

Ambient Temperatures

Descriptions of the operating procedures observed during Phase I deliveries

8.7.2 Test Point 1 (Nozzle Sleeve)

Dispensed Fuel Vapor Pressure

Dispensed Fuel Volume

8.7.3 Test Point 2 (Vapor Return Line)

Pressure Drop from Nozzle to Tank measured using TP-201.2B

8.7.4 Test Point 3 (Vent or Vapor Processor)

PV Valve Cracking Pressure

8.7.5 Test Point 4 (Vapor Incinerator)

Equipment Design and Operating Parameters

Observed Operating Parameters

9 QUALITY ASSURANCE / QUALITY CONTROL (QA/QC)

9.1 Analyzers

A comprehensive laboratory calibration shall have been conducted within a six month period proceeding the use of any analyzer for testing conducted using TP-201.2. During the laboratory calibration the analyzer response to zero gas and a number (6 for instruments with a linear response and 10 if the analyzer response is non-linear) of known gas concentrations are recorded. The known gas concentrations (traceable to reference cylinders) and the observed analyzer response are used to produce a calibration curve or equation. Laboratory calibrations must be conducted using procedures that will produce analyzer calibrations that demonstrate equivalent accuracy and precision to laboratory calibrations that are conducted following ARB “SOP No. MLD 054, Standard Operating Procedure for the Multilevel Calibrations of Pollutant Gas Analyzers”.

9.2 Volume Meters

Standard methods and equipment shall be used to calibrate the meters on an annual basis. The calibration curves are to be traceable to NIST standards. The error in the volume determined by the meter shall be less than 5% of the true volume over the entire range of flow rates for which the meter will be used during testing performed following TP-201.2. (Volumetric flow rates of approximately: 2 to 5 cfm for the nozzle sleeve at test point 1, 2 to 20 cfm for the vent sleeve at test point 3, and 0.5 to 1.4 cfm for the vapor return line are typical.)

9.3 Sleeve Sampling Apparatus

The design of the vent sleeve is shown in Figure 21.

Sleeve Pumps should be warranted for at least 400 hours continuous operation without required maintenance. Metal bellows and carbon vane pumps have been successfully utilized for this test procedure.

Prior to the initial use for TP-201.2 testing it is recommended that laboratory testing be performed to validate both the collection efficiency of the sleeve and the accuracy of any automated or manual algorithms that are used to calculate the sleeve mass from the volume, temperature pressure and concentration measurements recorded for the sleeve sample. Suggested procedures for such validation testing are discussed below.

To test vent sleeve collection at high (3 – 7 cfm) tank vent emission rates bubble nitrogen through gasoline filled impingers and then through roots meter (equipped with meter temperature and pressure monitoring) at inlet of simulated vent pipe discharging to the vent sleeve sample apparatus equipped with vent sleeve HC analyzers. Quantify HC concentration of flow from simulated vent line with by sampling at outlet of gasoline impingers and sample analysis with 0-80 % NDIR. Determine volume of flow into the simulated vent pipe and vent sleeve using a volume meter installed at simulated vent line inlet. The mass of HC entering the vent sleeve must be $\pm$ 5% of the mass of HC collected from the vent sleeve as determined by the vent sleeve sampling apparatus volume, temperature, pressure and HC concentration measurements and the data recording system and mass calculation algorithms.

(Caution: Make sure that the exhaust from the vent sleeve pump and vent sleeve analyzers are directed to a safe location and that all inhalation and fire hazards associated with exposure to gasoline and gasoline vapors are addressed.)

To test sleeve collection at low vent rates (approximately 200 ml/min) run propane span gas with a concentration of 10 to 20 % by volume through a mass flow controller (a bubble meter or precision rotameter with sufficient accuracy may be acceptable) and into the inlet of simulated vent pipe discharging to the vent sleeve sample apparatus equipped with vent sleeve HC analyzers. Accurately determine the time that span gas was allowed to enter the sleeve and calculate the mass of propane entering the sleeve from the flow rate determined from the mass flow controller and the known span gas concentration. The mass of HC entering the vent sleeve must be $\pm$ 5% of the mass of HC collected from the vent sleeve as determined by the vent sleeve sampling apparatus volume, temperature, pressure and HC concentration measurements and the data recording system and mass calculation algorithms.

9.4 Calibration Gases

Calibration gases are classified into three types:

(1) **Standard Reference Materials**

These are primary standards to which all other standards shall be traceable. For any substance for which no standard reference material is obtainable, a calibration gas of the highest level of accuracy and precision obtainable shall qualify as a standard reference material, subject to approval by the ARB Executive Officer.

A standard reference material, which normally is kept at a main laboratory, qualifies as an intermediate standard and as a working standard, too.

(2) **Intermediate Standards**

These are secondary standards which shall be assayed versus the corresponding NIST-SRM once every six months with a concentration difference which is no more than one percent of the results for the NIST-SRM. An intermediate standard container which does not meet its assay requirement shall be taken out of service. To re-enter service, the intermediate standard container shall be recharged and meet its assay requirement.

An intermediate standard, which normally is kept at a branch laboratory or a shop, qualifies as a working standard, too.

(3) **Working Standards**

These are tertiary standards which shall be assayed versus the corresponding intermediate standard before every test with a concentration difference which is no more than one percent of the results for the intermediate standard. A working standard container which does not meet its assay requirement shall be taken out of service. To re-enter service, the working standard container shall be recharged and meet its assay requirement.

A working standard normally serves for field calibration and testing.

A "Certificate of Analysis" from the gas supplier can be submitted in the Certification Test Report as evidence of compliance with the specifications above; regardless of such certificate, the tester is ultimately responsible for satisfying the requirements given above in the event that a certificate is contradicted by subsequent analysis of the contents of a certified gas container.

All calibrations shall be performed with a calibration gas of at least working standard quality. Any cylinder is to be recharged or taken out of service when the cylinder pressure drops to 10 percent of the original pressure.

Information on calibration gas cylinders shall be entered into a permanent log identifying each cylinder by serial number. Sufficient information shall be maintained to allow a determination of the compliance status of each calibration gas per these requirements; such information shall be recorded for each cylinder and shall include, but not be limited to: (1) the date put in service, (2) assay result (3) the dates the assay was performed, (4) the

organization and specific personnel who performed the assay, and (5) the date taken out of service.

10 RECORDING DATA

10.1 Methods of Recording

10.1.1 Strip Charts Required

The output response of all continuous monitoring instruments utilized to determine the values of the parameters identified in figure 1 shall be continuously recorded on ink and paper strip charts. The strip chart data shall include the instrument response during field calibrations required by this test procedure. These strip charts shall be available to the ARB Executive Officer at any time during testing conducted following TP-201.2 and shall be included in the final test report submitted to the ARB Executive Officer. Manual logging of data from test equipment without an electronic instrument output suitable for input to a data logger or strip chart recorded (e.g. a volume totaling meter) may be used with the prior approval of the ARB Executive Officer.

10.1.2 Electronic Data

Electronic data logging and data reduction/manipulation is recommended during the testing conducted pursuant to TP-201.2. The electronic data need not contain all intermediate values of the data recorded pursuant to Section 10.1.1. However, the average values of the sampled parameters and the total mass determined at test point 1, the nozzle sleeve, should be permanently recorded for each dispensing episode. Furthermore, frequent intermediate values of the total mass emitted at test points 3, 4, and 4b should be recorded. Frequent recording of intermediate values may be critical to any attempt to justify data manipulation procedures that are proposed to invalidate and repeat specific portions of the test rather than invalidating and repeating the entire test period necessary for satisfactory completion of TP-201.2

10.2 Chain of Custody

Written data records must be kept during testing and persons in control of such data must be documented in a chain of custody record.

10.3 Necessary and Sufficient Data

Written data records must contain all information used to calculate and report final results.

10.4 Reconciliation of Reported Results to Recorded Data

The final results must be verifiable by recalculation from the written data records.

10.5 Permanent Records

These written data records must be remain on file permanently and made available to the Executive Officer of the Air Resources Board upon request.

11 CALCULATING RESULTS

The mass emission factor shall be calculated and reported to the nearest 0.001 Lb/kgal.

11.1 General Nomenclature

Figure 1 illustrates some parameters specified in the calculations.

11.1.1 Parameters

General parameters are listed below, other parameters are defined in the calculations or alternative procedures:

[HC] = hydrocarbon concentration (volume fraction, i.e. ppm_v / 10^6 or Volume % / 10^2)

V_m = metered volume of gases and vapors,

P = meter pressure, and

T = meter temperature.

G_e = Gallons of liquid dispensed during episode e

11.1.2 Subscripts

Subscripts are used to distinguish values for the same general parameter at differing test locations and times, e.g.:

$P_{(t,e,s)}$ = value of parameter "P" at test point "t" for dispensing episode "e" during the time interval "s".

Any or all of these subscripts may modify a parameter, and for consistency, subscripts will appear in the order given above (t,e,s). For example:

$P_{(t,e)}$ = value of parameter "P" at test point "t"; for dispensing episode "e" and

P_t = value of parameter "P" at test point "t" for the entire test period.

11.2 Volume at Standard Conditions of Temperature and Pressure

Directly measured volumes (such as those directly measured for Test points 1, 2, 3, 4, and 4a) shall be standardized as follows:

$$V = V_m \times \left(\frac{528}{T}\right) \times \left[\frac{P_{bar} + \left(\frac{P}{13.6}\right)}{29.92}\right]$$

where:

V = volume corrected to standard conditions (ft^3).

V_m = measured volume (ft^3).

P_{bar}= barometric pressure (in. Hg).

P = meter pressure (inches water column).

T = meter temperature (^oR).

11.3 Concentration

Each measured concentration of gas and vapor shall be corrected for any analyzer zero and/or span drifts and shall be expressed as a volume fraction (i.e. volume % / 10^2 or ppm_v / 10^6).

11.4 Mass

HC mass emissions are calculated as the product of a volume (std. cu. ft.), a HC volume fraction (cu. ft. HC / cu. ft.), and a mass density (Lb. HC / std. cu. ft. HC). If the volumetric flow rate at the test point does not vary significantly with time then the time averaged HC concentration can be multiplied by the total volume for the time period to obtain an accurate total hydrocarbon mass for the time period. However, if the volumetric flow rate at the test point varies significantly with time, then incremental masses must be calculated from incremental volume and time averaged concentrations for subintervals of short enough duration that the flow rate is essentially constant for the subinterval. The incremental masses calculated in this manner for each subinterval must then be summed over the entire time period for which the total mass is to be determined. This is most readily accomplished through the use of electronic data acquisition and manipulation to calculate and sums incremental masses representing time periods on the order of several seconds.

Masses are calculated using the following equation:

$$m_t = V_t \times [HC]_t \times \left[\frac{MW}{385}\right]$$

where:

m_t = mass at test point t (lb)

V_t = volume at test point t corrected to standard conditions (ft^3).

$[HC]_t$ = hydrocarbon concentration at test point t (volume fraction, i.e. ppm_v / 10^6 or Volume % / 10^2)

MW = molecular weight of HC analyzer calibration gas (lb/lb-mole) e.g., 44 for propane

385 = standard volume (ft^3) of one lb-mole of ideal gas at standard temperature and pressure (528^oR and 29.92 in. Hg)

11.5 Volume Calculations

11.5.1 Volume for Test Point 1 (Nozzle Sleeve)

This volume is directly measured and shall be standardized per Section 11.2

11.5.2 Volume for Test Point 2 (Vapor Return Line)

This volume is directly measured and shall be standardized per Section 11.2

11.5.3 Volume for Test Point 3 (Vent Sleeve and/or Vapor Processor Exhaust)

This volume is directly measured and shall be standardized per Section 11.2

11.5.4 Volume for Test Point 4 (Incinerator)

The incinerator exhaust volume is calculated per EPA Method 2B. Note the possibility for simplifying assumptions described in Section 8.4.3

11.5.4.1 Preliminary Incinerator Exhaust Volume Calculations

Before calculating the vapor incinerator exhaust volume, calculate the following preliminary values:

(1) inlet volume from the facility vapor space (test point 4b)

Any inlet volume from the facility vapor space entering the vapor incinerator is directly measured and shall be standardized per Section 11.2.

(2) inlet volume of auxiliary fuel

If directly measured the inlet volume of auxiliary fuel entering the vapor incinerator shall be standardized per Section 11.2

(3) total inlet volume entering vapor incinerator

$$V_{in} = V_{fvs} + V_{af}$$

where:

V_{in} = total inlet volume entering vapor incinerator (SCF)

V_{fvs} = inlet volume from the facility vapor space (SCF)

V_{af} = inlet volume of auxiliary fuel (SCF)

11.5.4.2 Inlet Hydrocarbon Concentration

The combined inlet hydrocarbon concentration of gasoline vapors and auxiliary fuel shall be calculated using the following equation

$$[HC]_{in} = \frac{\left[\left(N_{fvs} \times [HC]_{fvs} \times V_{fvs}\right) + \left(N_{af} \times [HC]_{af} \times V_{af}\right)\right]}{V_{in}}$$

where:

V_{in} = total inlet volume entering vapor incinerator (SCF)

$[HC]_{in}$ = combined hydrocarbon concentration at the vapor incinerator inlet (volume fraction = Volume % / 10^2)

N = number of carbon atoms in each molecule of calibration gas

$[HC]_{fvs}$ = hydrocarbon concentration of vapors from the facility vapor space at the vapor incinerator inlet (volume fraction = Volume % / 10^2)

$[HC]_{af}$ = hydrocarbon concentration of auxiliary fuel (volume fraction = Volume % / 10^2)

Note 1
The equation presented above for the combined hydrocarbon concentration at the vapor incinerator inlet, $[HC]_{in}$, is used when the hydrocarbon concentration of the auxiliary fuel, $[HC]_{af}$,is determined during certification testing using a hydrocarbon analyzer. Simplifying assumptions, which produce acceptable accuracy for the incinerator exhaust mass, can be made when standard auxiliary fuels such as natural gas, propane or liquefied petroleum gas, are used. The simplification involves the substitution of the carbon concentration of the auxiliary fuel for the terms N_{af} x $[HC]_{af}$ in the equation above. The carbon concentration (i.e. 1 x $[CH_4]$ + 2 x $[C_2H_6]$ + 3 x $[C_3H_8]$ + . . .) can be determined from a chemical analysis of the auxiliary fuel which may be available from the auxiliary fuel supplier.

Note 2
If no auxiliary fuel is used by the incinerator the equation for the inlet hydrocarbon concentration reduces to:

$$[HC]_{in} = N_{fvs} \times [HC]_{fvs}$$

11.5.4.3 Final Incinerator Exhaust Volume Calculations

Calculate the vapor incinerator exhaust volume using the following equation:

$$V_{exh} = \frac{V_{in} \times [HC]_{in}}{\left(N_{exh} \times [HC]_{exh}\right) + [CO_2] + [CO] - 0.0003}$$

where:

V_{exh}	=	vapor incinerator outlet volume (SCF)
V_{in}	=	total inlet volume entering vapor incinerator (SCF)
$[HC]_{in}$	=	combined hydrocarbon concentration at the vapor incinerator inlet (volume fraction = % by volume / 10^2)
N_{exh}	=	number of carbon atoms in each molecule of calibration gas for the incinerator exhaust HC analyzer
$[HC]_{exh}$	=	vapor incinerator exhaust hydrocarbon concentration (volume fraction = ppm / 10^6)
$[CO_2]$	=	vapor incinerator outlet carbon dioxide concentration (volume fraction = % by volume / 10^2)
[CO]	=	vapor incinerator outlet carbon monoxide concentration (volume fraction = ppm / 10^6)
0.0003	=	assumed background concentration of CO_2 (volume fraction = ppm / 10^6)

11.6 Dispensing Facility Vent, Vapor Processor, or Vapor Incinerator Calculations

To evaluate the possibility of a system eventually meeting the efficiency performance standard, these calculations must be completed before the individual dispensing episode calculations and the ultimate mass emission factor test result calculation.

The total mass of tank vent and vapor processor exhaust, or vapor incinerator exhaust HC emissions from the GDF occurring during the test period must be apportioned to the monitored dispensing episodes occurring at test point 1 on a proportional basis of dispensed volume.

11.6.1 Total Fugitive, Tank Vent, and Processor or Incinerator Mass Emissions

m_2 = Total HC mass determined during the entire test period for pressure driven fugitive emissions

m_3 = Total HC mass determined during the entire test period at test point 3 (vent)

m_4 = Total HC mass determined during the entire test period at test point 4 (vapor processor) or 4b (vapor incinerator)

11.6.2 Fraction of the Total Fugitive, Tank Vent, and Processor or Incinerator Mass Emissions apportioned to the monitored dispensing episodes at Test point 1, nozzle fill-pipe dispensing interface

For any total mass at test points 2 through 4, the fraction of the mass apportioned to the monitored dispensing episodes at test point 1 is calculated as:

$$m'_t = \left(\frac{\sum_{e=1}^{n} G_e}{G_{gdf}} \right) \times m_t$$

where:

m'_t = the fraction of the total mass determined at test point t which is apportioned to all monitored dispensing episodes at test point 1

G_e = the volume of gasoline dispensed to the motor vehicle during dispensing episode, e.

G_{gdf} = the total volume of gasoline dispensed from the GDF storage tank or from the single tank supplying the dispensing nozzle at test point 1 if the storage tanks and/or tank vents are not connected by a manifold) during the entire test period bounded by the times of the first and last dispensing episodes upon which the emission factor determination will be based.

N = the number of the last dispensing episodes at test point 1

11.6.3 Emission Factor Test Result Calculation

For the tested vapor recovery equipment, the mass emission factor test result, EF in units of lbs HC/thousand gallons dispensed to motor vehicles, determined by TP-201.2 is:

$$EF = \frac{\left[\sum_{e=1}^{n} m_{1,e} + \sum_{t=2}^{4} m'_{t}\right]}{\sum_{e=1}^{n} G_e} \times 1000$$

12 REPORTING RESULTS

The following are required by Section 10 RECORDING DATA:

(1) Chain of Custody

(2) Necessary and Sufficient Data

(3) Reconciliation of Reported Results to Recorded Data

(4) Permanent Records

Example report forms are provided in Forms 1 through 4 for generating written documents to meet these requirements. Other formats can be used; however, no test report shall be accepted or approved unless it contains at least the information specified in these forms.

All such forms must be written and submitted on acceptable media as specified by the the ARB Executive Officer on a case-by-case basis for each report.

In cases of conflict between hard copy and electronic format, the hard copy shall be presumed correct, unless the ARB Executive Officer specifies otherwise in writing.

13 ALTERNATIVE TEST PROCEDURES

13.1 General Alternative Test Procedures

Test procedures, other than specified above, shall only be used if prior written approval is obtained from the ARB Executive Officer. In order to secure the ARB Executive Officer's approval of an alternative test procedure, the applicant is responsible for demonstrating to the ARB Executive Officer's satisfaction that the alternative test procedure will produce results equivalent to those produced by TP-201.2 with precision and accuracy as good or better than obtainable through application of this test procedure.

(1) Such approval shall only be granted on a case-by-case basis. Because of the evolving nature of technology and procedures for vapor recovery systems, such approval shall not be granted in subsequent cases without a new request for approval and a new demonstration of equivalency.

(2) Documentation of any such approvals, demonstrations, and approvals shall be maintained in the ARB Executive Officer's files and shall be made available upon request.

14 REFERENCES

This section is reserved for future specification.

15 EXAMPLE FIGURES AND FORMS

15.1 Figures

Each figure provides an illustration of test implements which conform to the requirements of this test procedure; other test implements which so conform are acceptable, too. Any specifications or dimensions provided in the figures are for example only, unless such specifications or dimensions are provided as requirements in the text of this or some other required test procedure.

Figure 1
Test Locations

Figure 2
Test Point 1 (Nozzle Sleeve)

Figure 3
Vehicle Leak Check Procedure (Nitrogen Flow Pressurization)

Figure 4
Vehicle Leak Check Procedure (Alternate Apparatus For Nitrogen Flow Pressurization Or Manual Compression)

Figure 5
Vehicle Leak Check Procedure (Manual De-Compression)

Figure 6
Nozzle Sleeve Assembly (Sectional View)

Figure 7
Nozzle Sleeve Assembly (Axial View)

Figure 8
Nozzle Sleeve Assembly Installed On Dispensing Nozzle At Test Point 1

Figure 9
Combustible Gas Detector Used For Sleeve Leak Checks

Figure 10
Combustible Gas Detector In Use During Nozzle Sleeve Leak Check

Figure 11
Nozzle And Vent Sleeve Volume Measurements

Figure 12
Nozzle And Vent Sleeve HC Concentration Measurements

Figure 13
Optional Vapor Return Line Measurements

Figure 14
Vapor Return Line Volume Measurements

Figure 15
Vapor Return Line Volume Measurements (Single VR Line)

Figure 16
Vapor Return Line Volume Measurements (VR Lines Connected By Manifold)

Figure 17
Optional Vapor Return Line HC Concentration Measurements

Figure 18
Test Points 3 (Vent), 4 (Processor), 4a (Incinerator Inlet) & 4b (Incinerator Exhaust)

Figure 19
Vent Sleeve Apparatus Installed On Vent Lines Connected By Manifold

Figure 20
Vent Sleeve Apparatus Installed On Single Vent Line

Figure 21
Design Detail Of Vent Sleeve continuous analyzer sampling housing (CASH)

Figure 22
Determination Of Nozzle Bellows Pressure During Fueling Episodes At Test Point 1

15.2 Forms

Each form provides an illustration of an implementation which conforms to the requirements of this test procedure; other implementations which so conform are acceptable, too. Any specifications or dimensions provided in the forms are for example only, unless such specifications or dimensions are provided as requirements in the text of this or some other required test procedure.

Form 1 Chain of Custody

Form 2 Data

Form 3 Results

Form 4 Permanent Records

FIGURE 1
TEST LOCATIONS

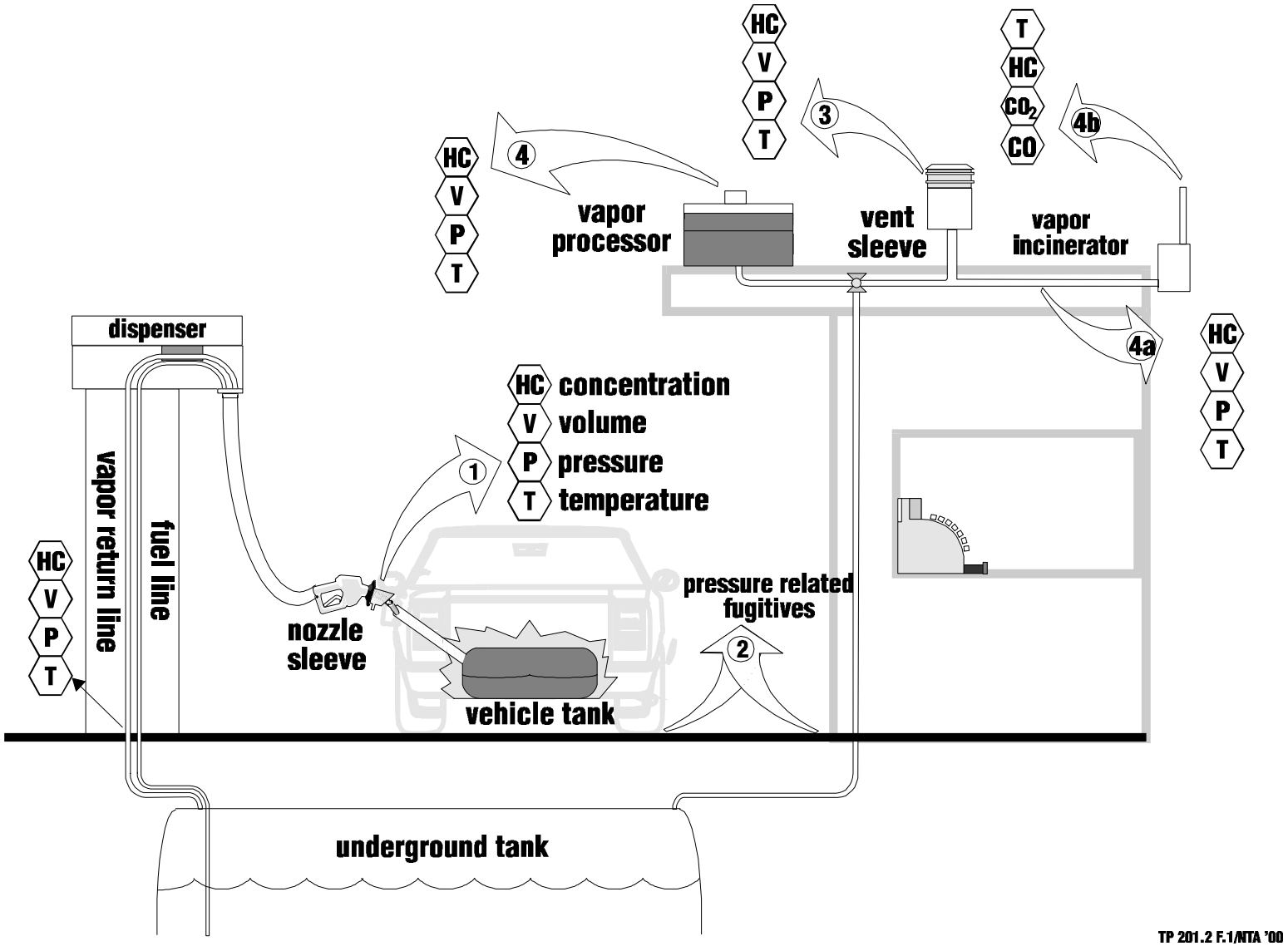

FIGURE 2
TEST POINT 1 (NOZZLE SLEEVE)

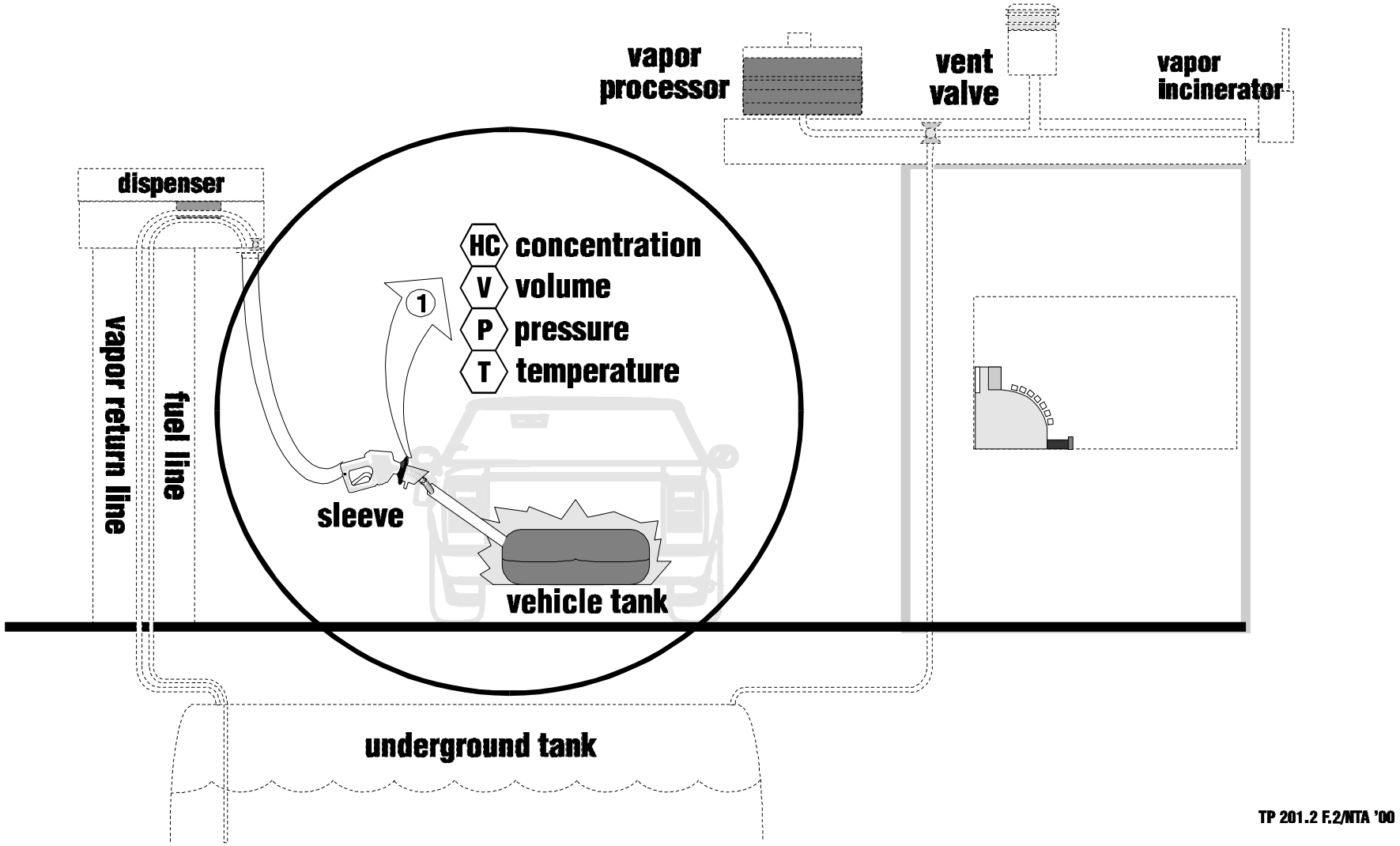

FIGURE 3
VEHICLE LEAK CHECK PROCEDURE (NITROGEN FLOW PRESSURIZATION)

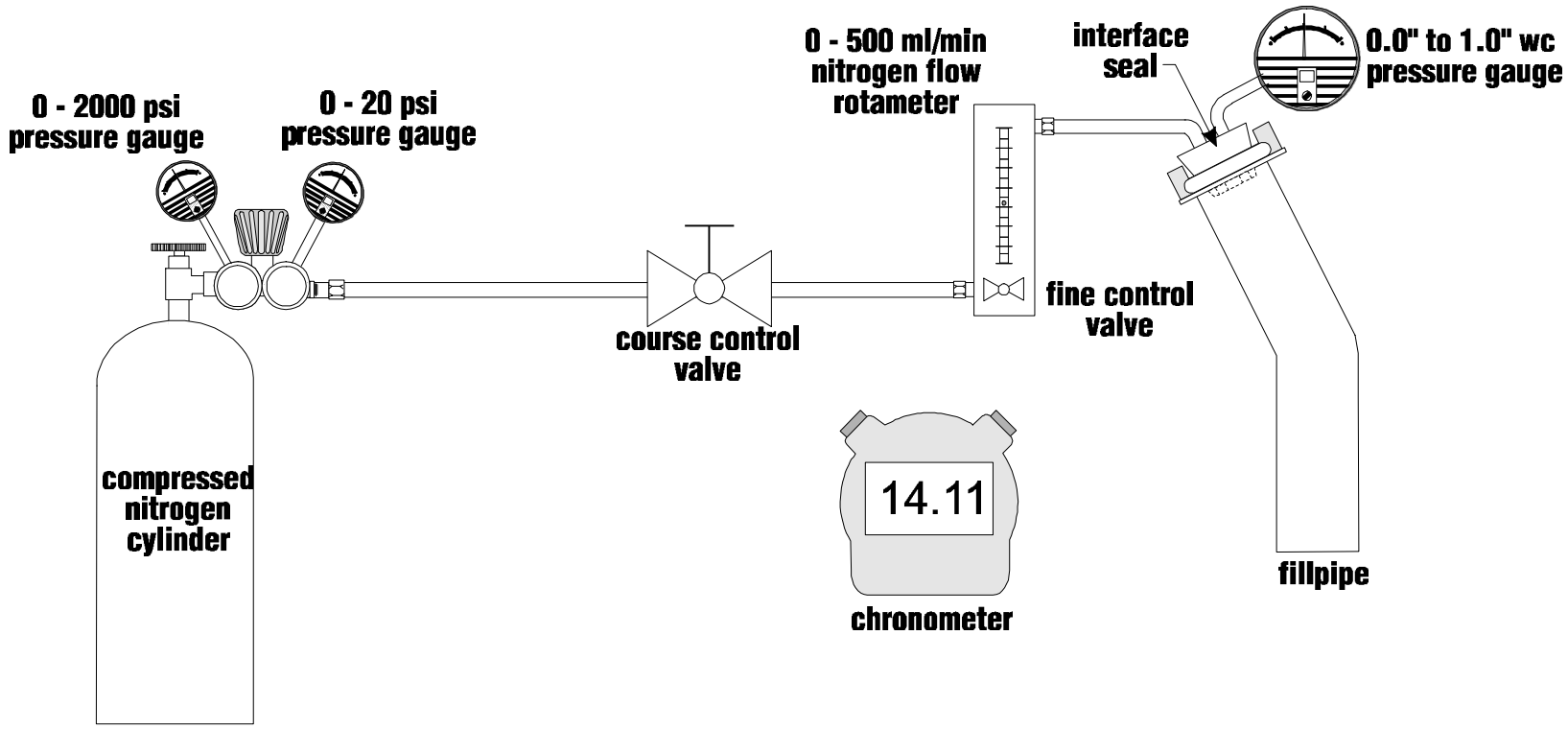

FIGURE 4
VEHICLE LEAK CHECK PROCEDURE
(ALTERNATE APPARATUS FOR NITROGEN FLOW PRESSURIZATION OR MANUAL COMPRESSION)

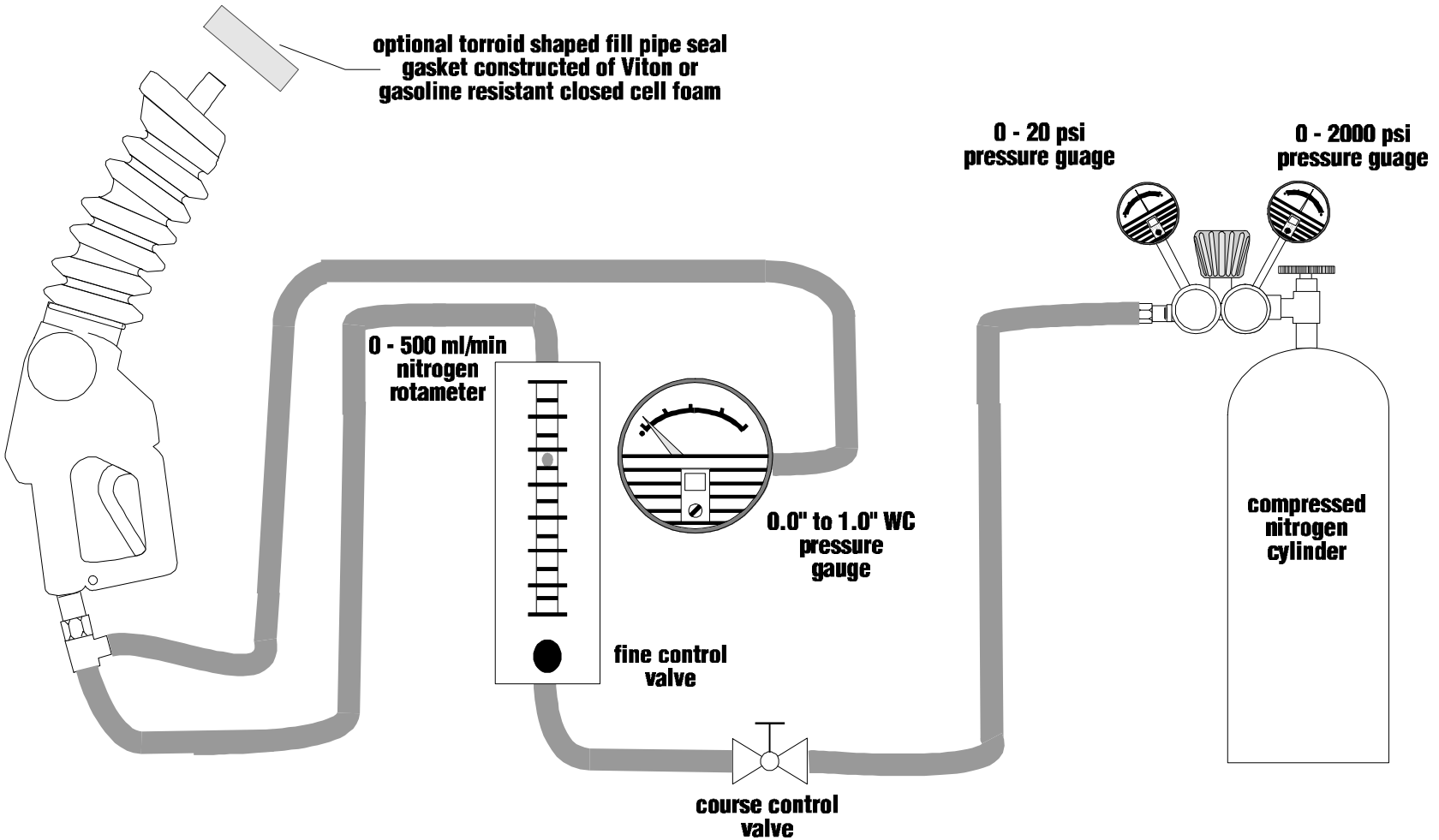

TP 201.2 F.4/ NTA '00

FIGURE 5
VEHICLE LEAK CHECK PROCEDURE (MANUAL DE-COMPRESSION)

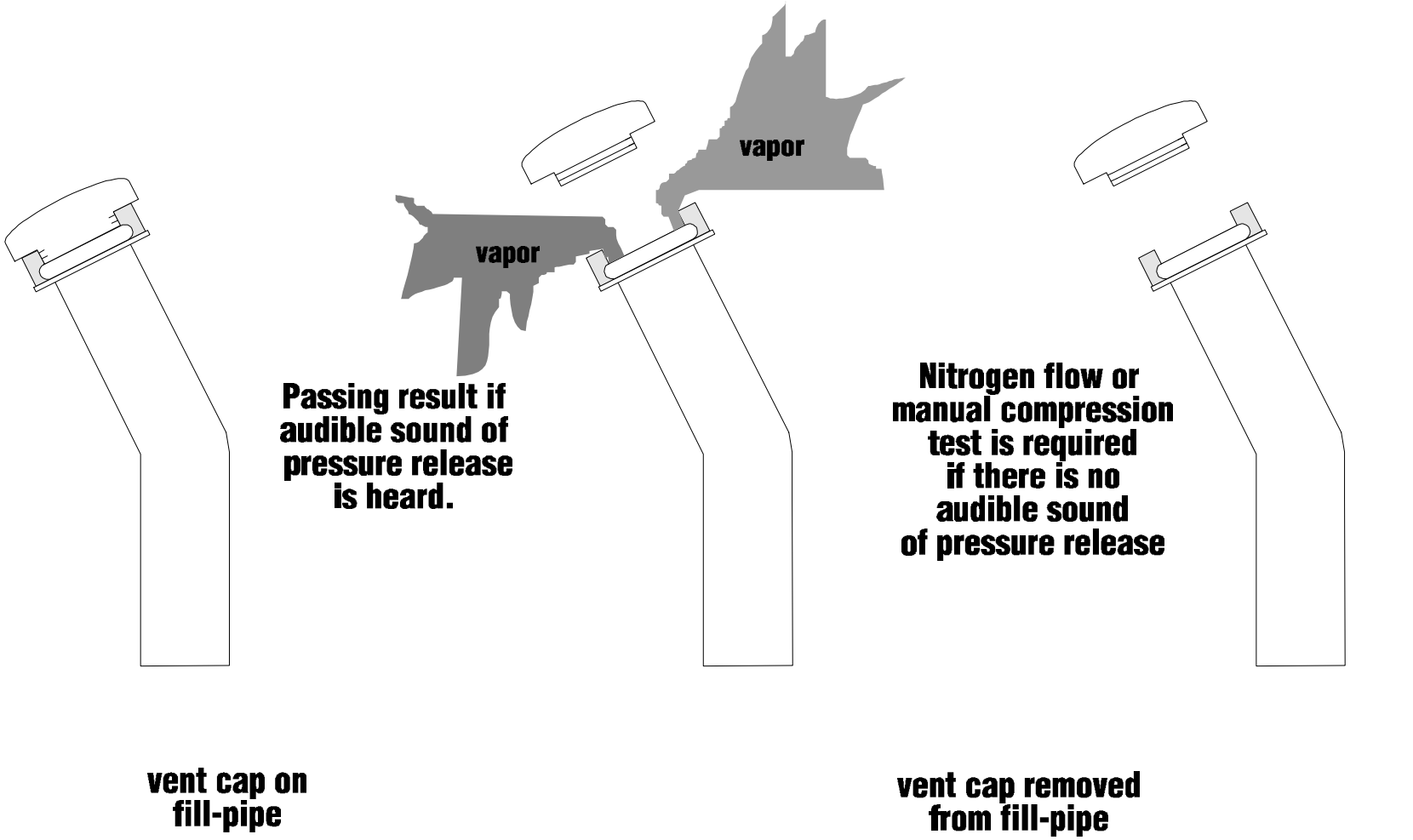

FIGURE 6
NOZZLE SLEEVE ASSEMBLY (SECTIONAL VIEW)

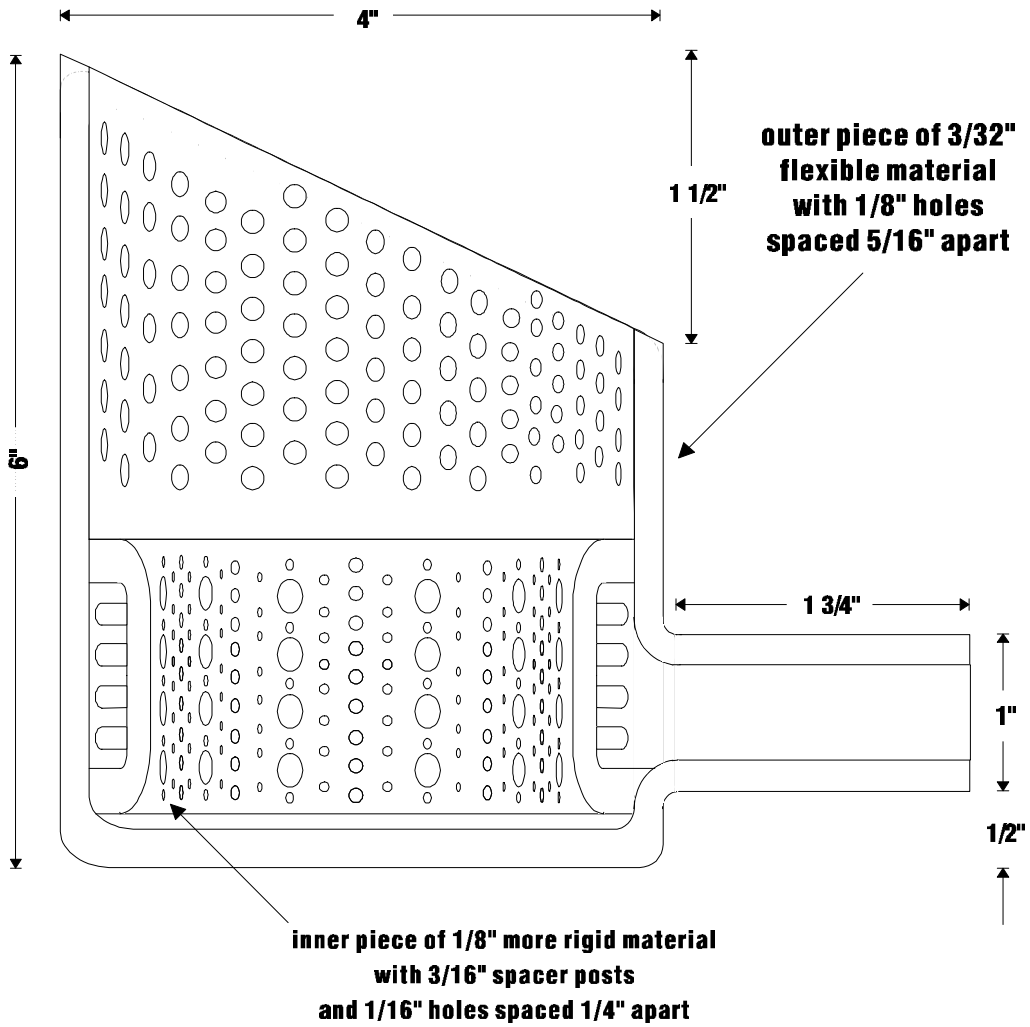

these dimensions are for example, and are not specifications

FIGURE 7
NOZZLE SLEEVE ASSEMBLY (AXIAL VIEW)

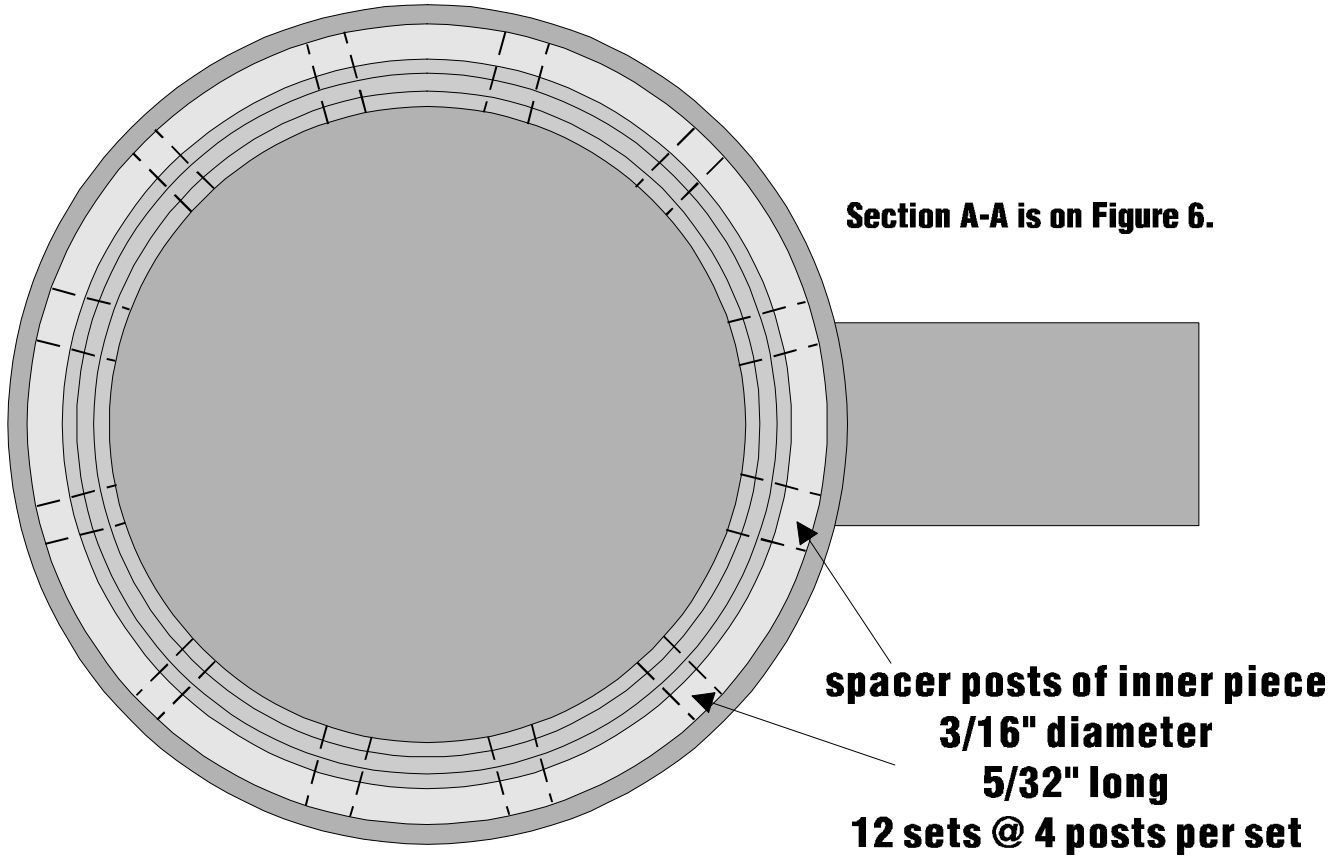

Materials must be resistant to breakdown by fuels and additives and easily bonded and repaired.

FIGURE 8
NOZZLE SLEEVE ASSEMBLY INSTALLED ON DISPENSING NOZZLE AT TEST POINT 1

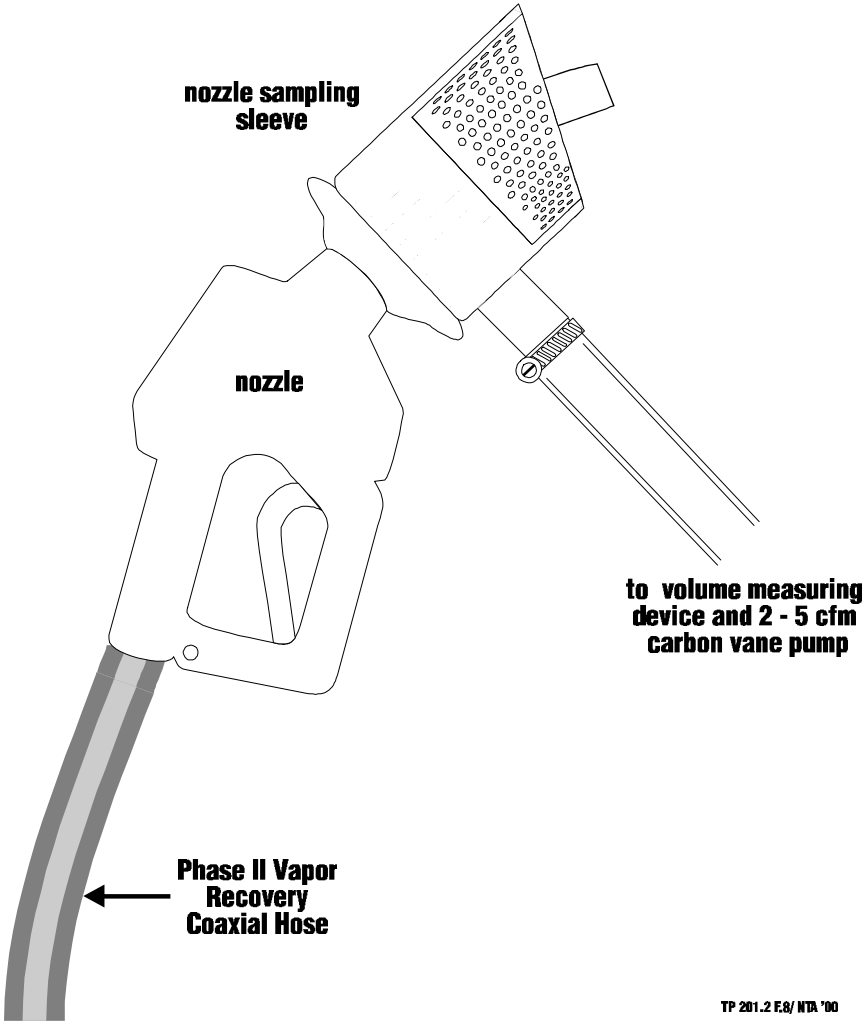

FIGURE 9
COMBUSTIBLE GAS DETECTOR USED FOR SLEEVE LEAK CHECKS

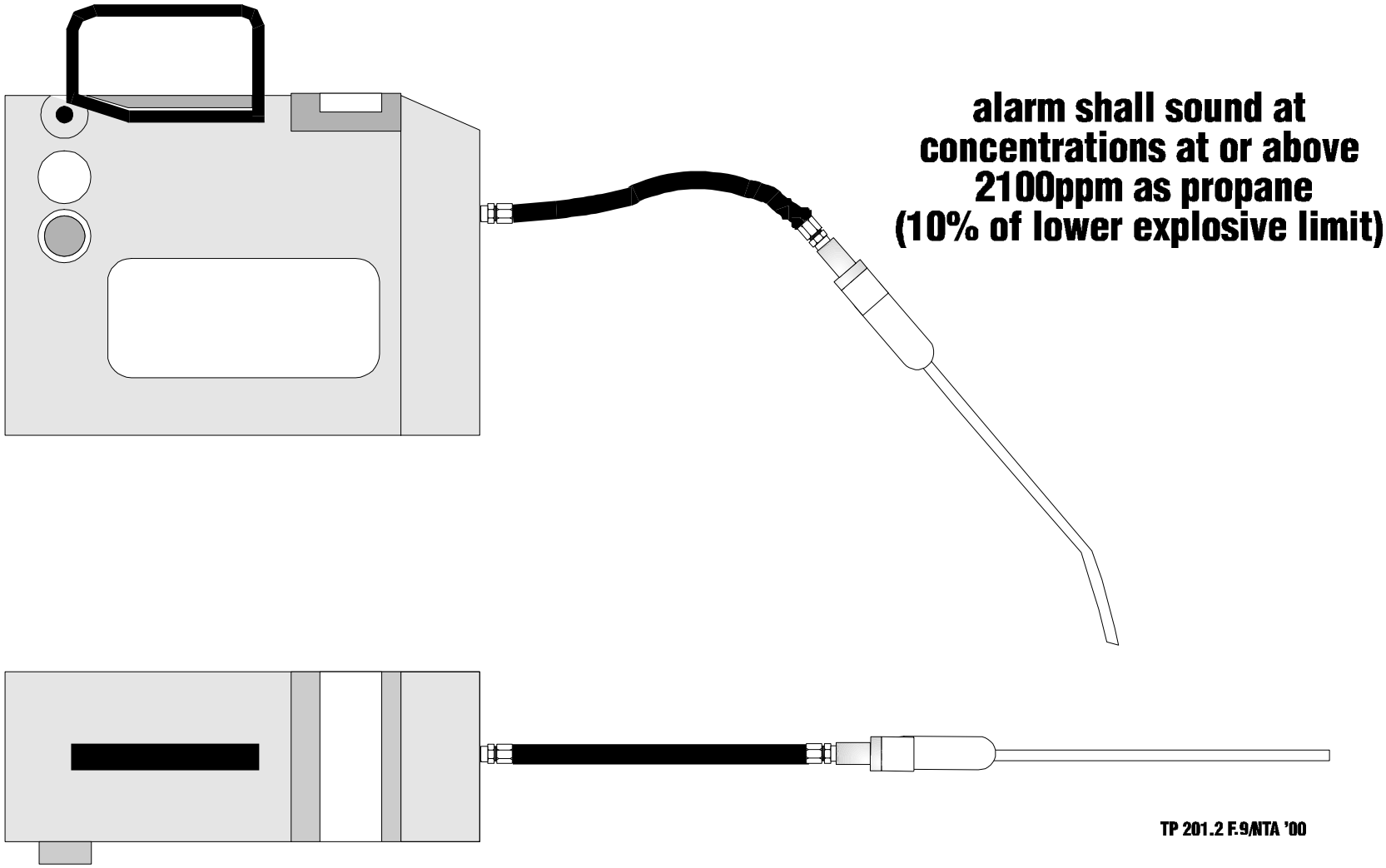

FIGURE 10
COMBUSTIBLE GAS DETECTOR IN USE DURING NOZZLE SLEEVE LEAK CHECK

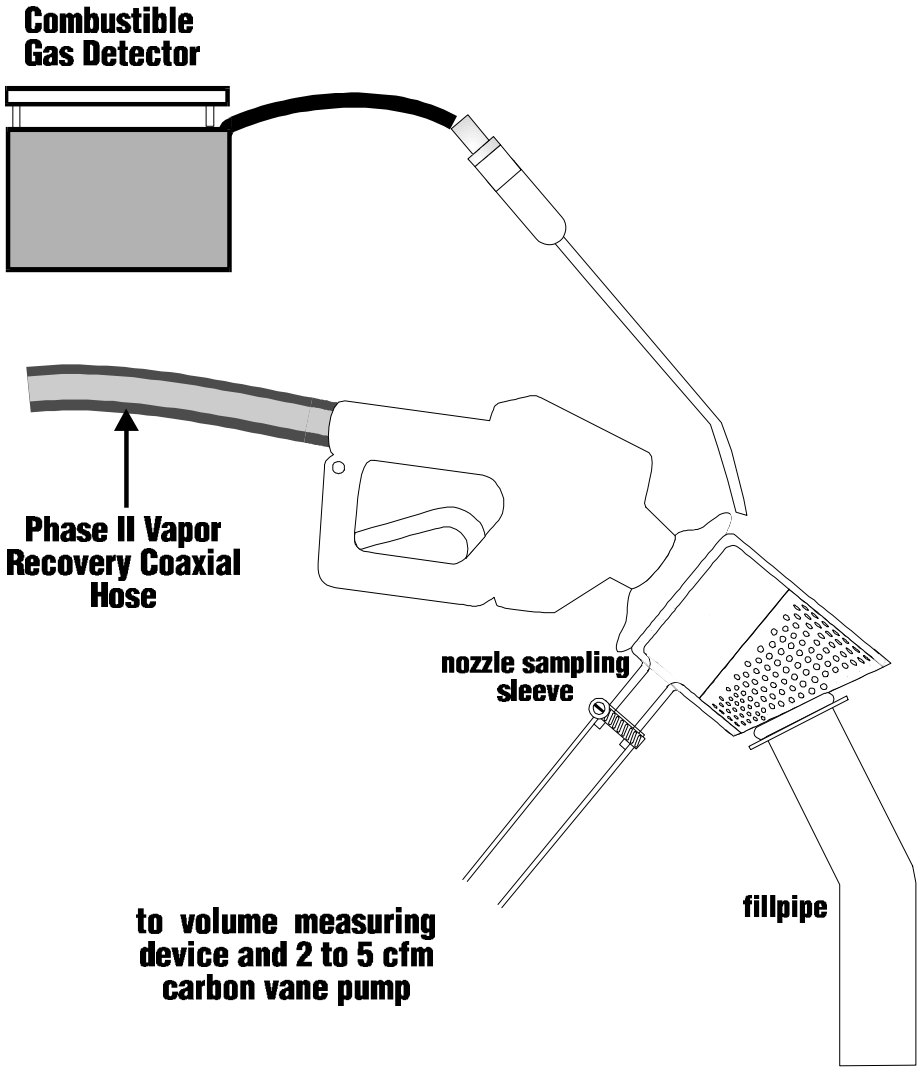

FIGURE 11
NOZZLE AND VENT SLEEVE VOLUME MEASUREMENTS

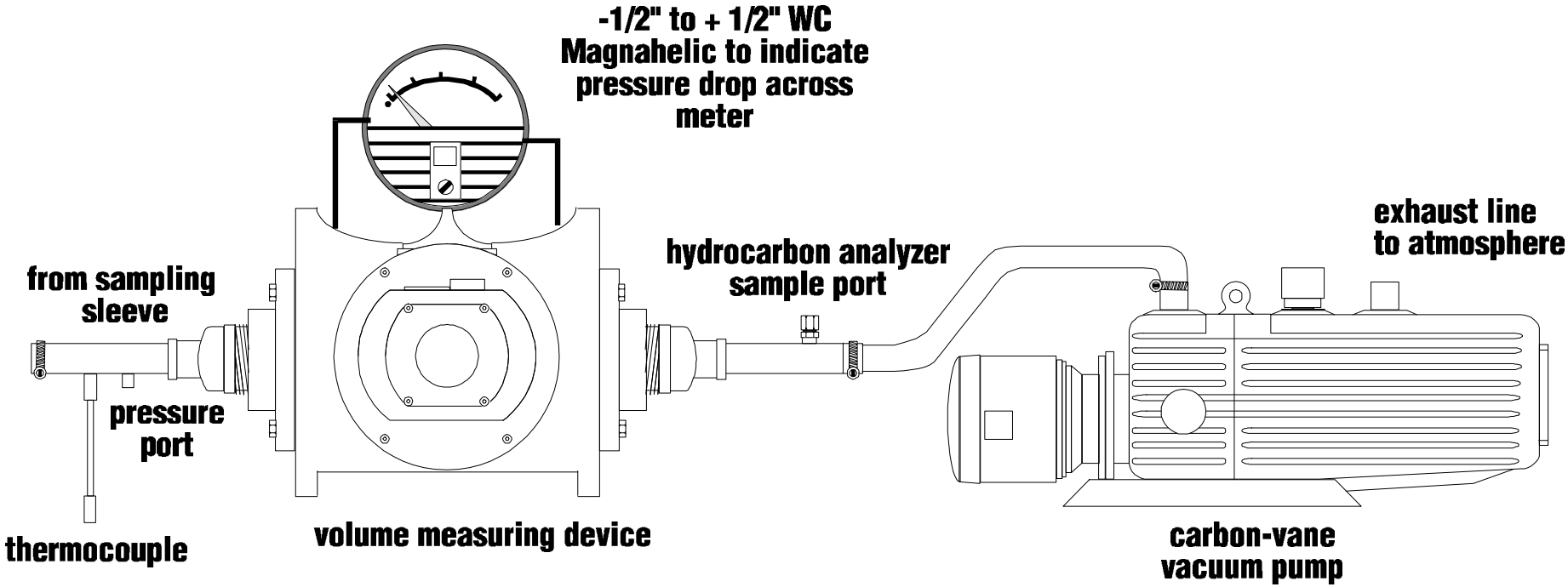

Note: Volume measuring device and hydrocarbon sample port may be located on exhaust side of carbon vane pump upon demonstration that gasoline concentrations are not affected by passage of vapor through vacuum pump.

TP 201.2 F.11/NTA '00

FIGURE 12
NOZZLE AND VENT SLEEVE HC CONCENTRATION MEASUREMENTS

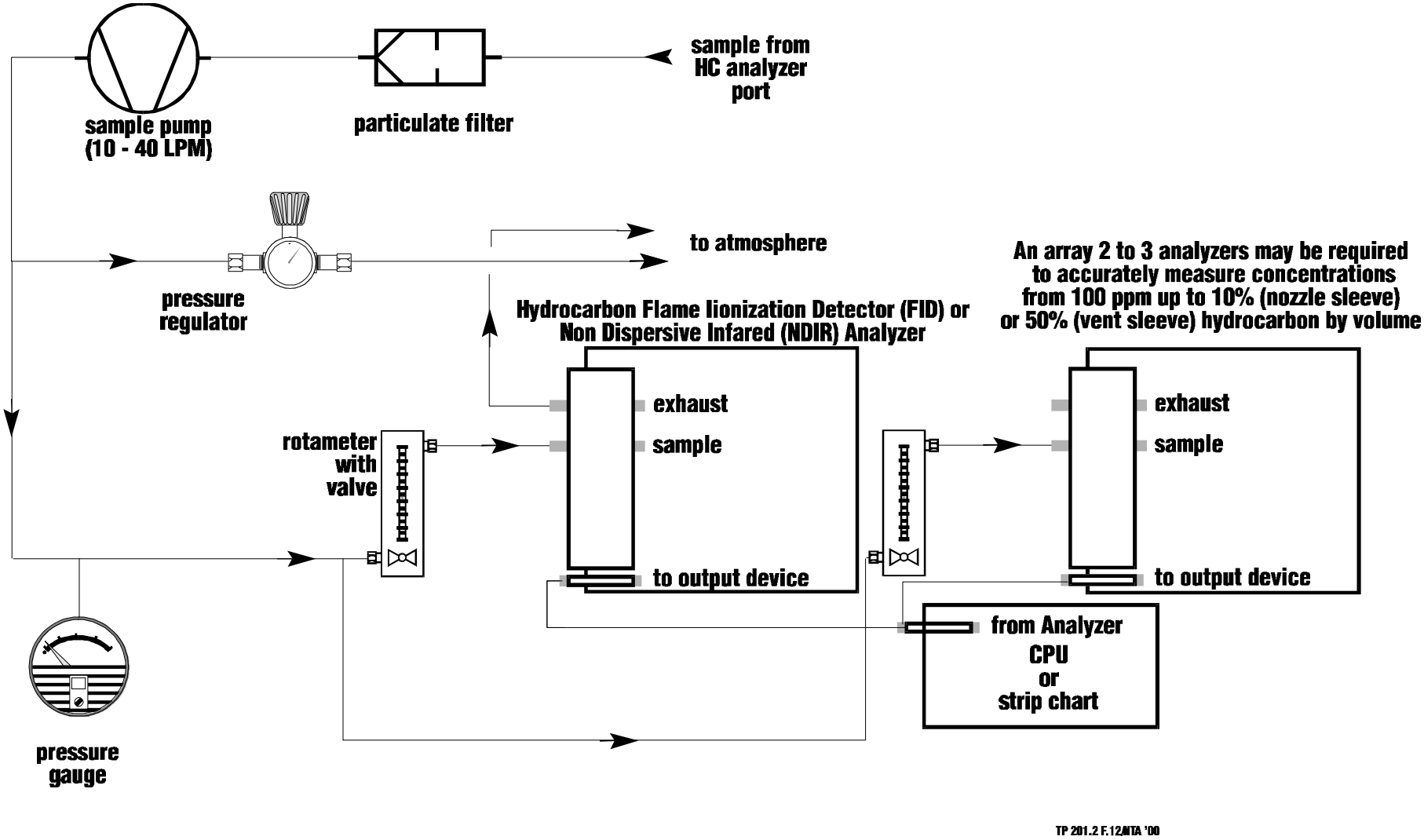

FIGURE 13
OPTIONAL VAPOR RETURN LINE MEASUREMENTS

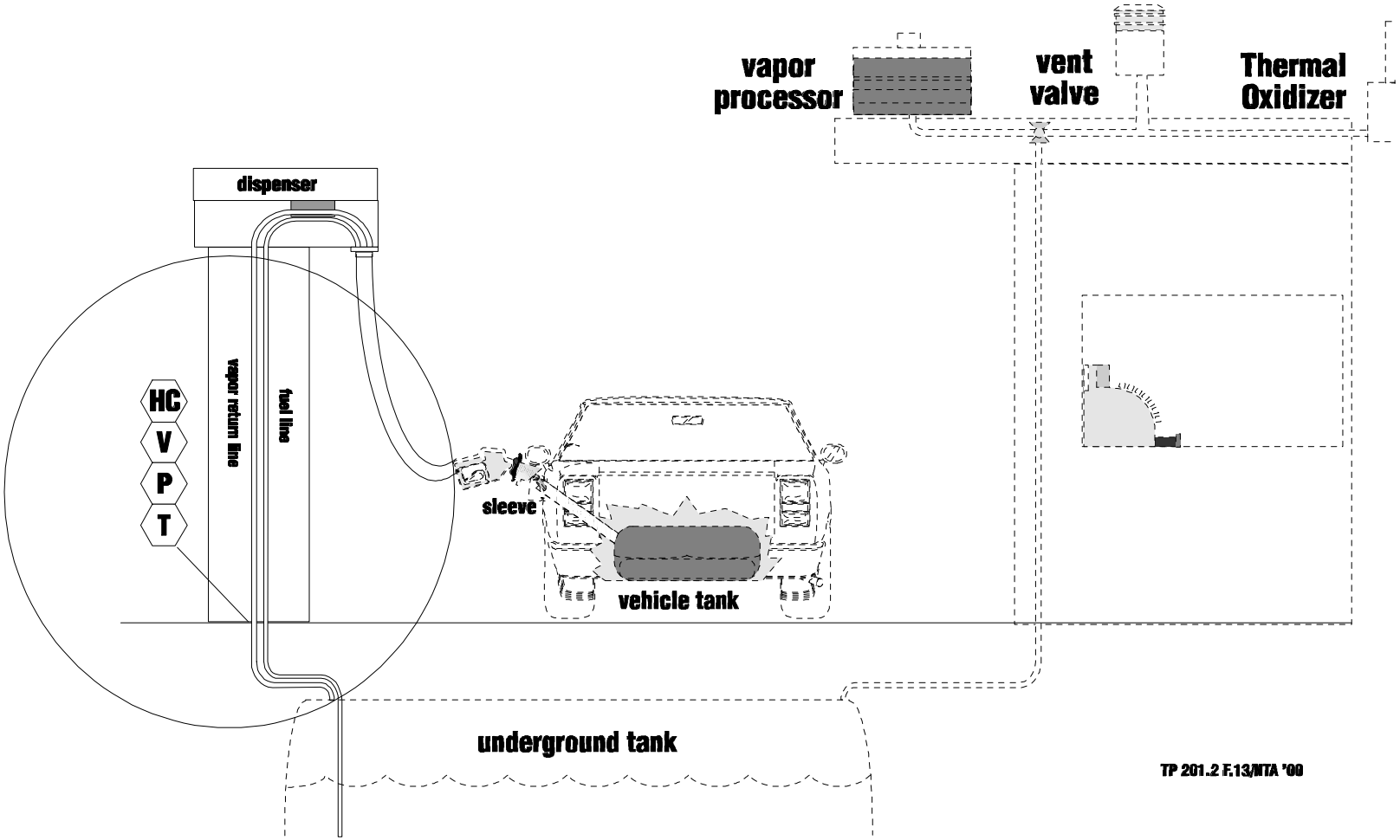

FIGURE 14
VAPOR RETURN LINE VOLUME MEASUREMENTS

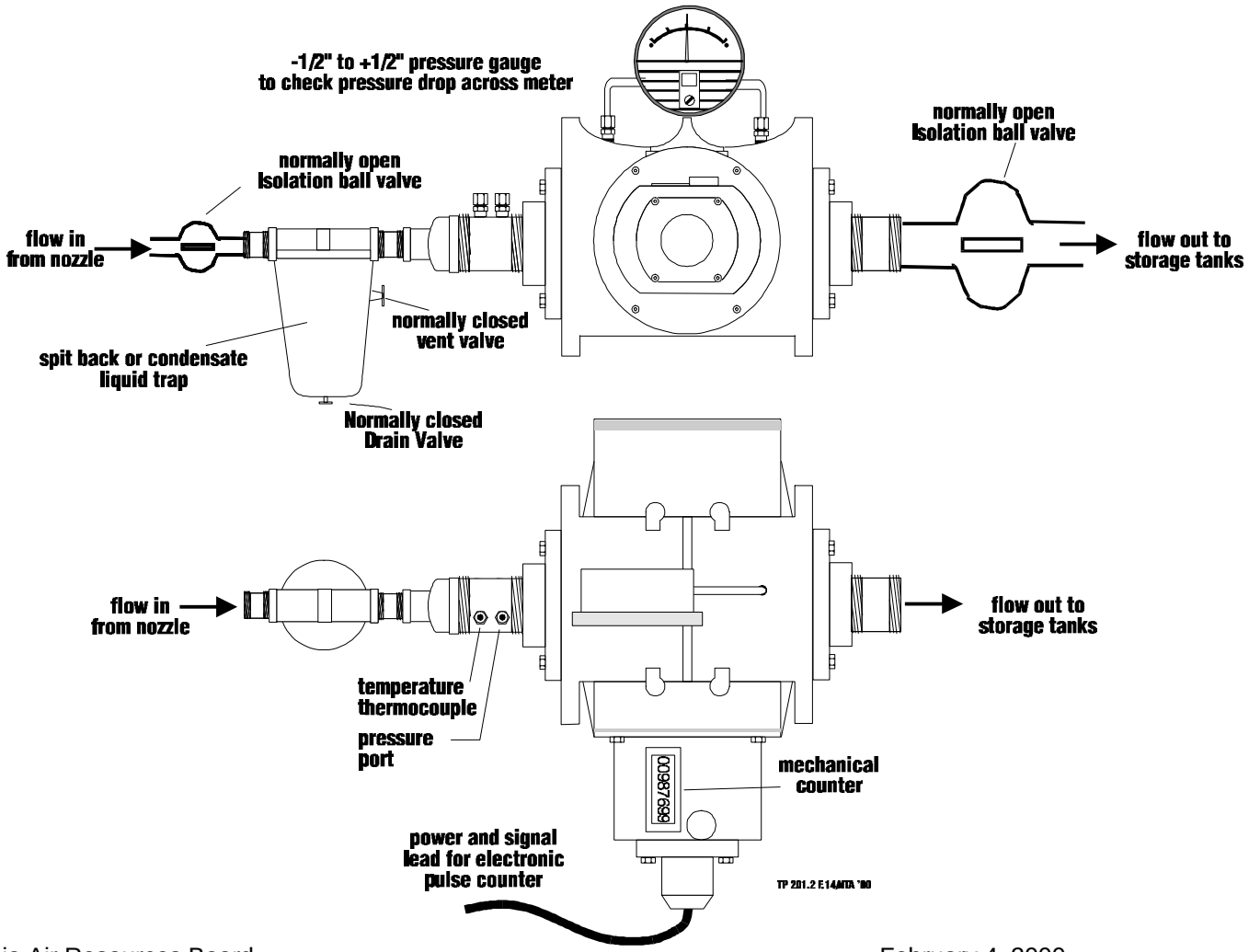

FIGURE 15
VAPOR RETURN LINE VOLUME MEASUREMENTS (SINGLE VR LINE)

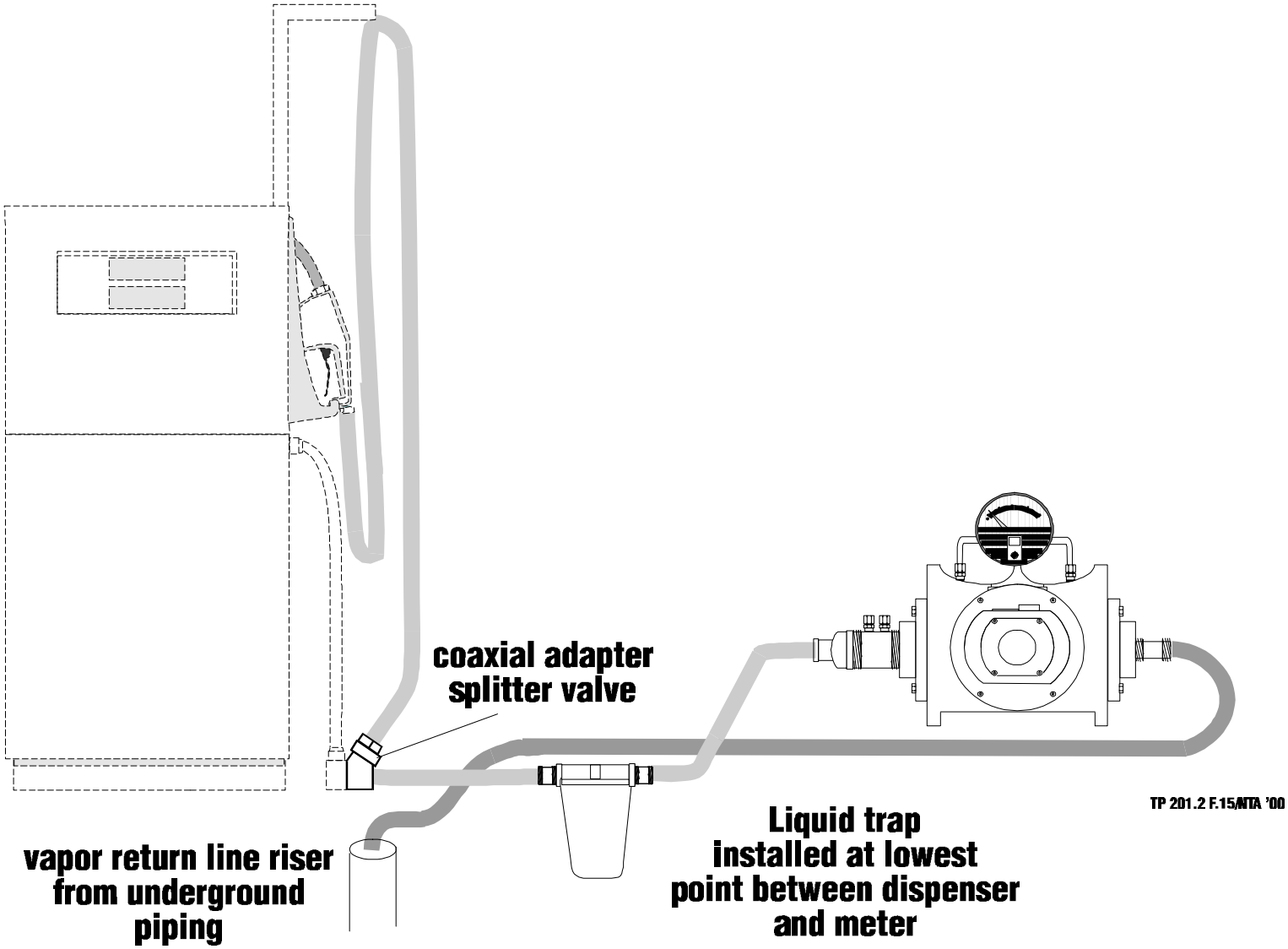

FIGURE 16
VAPOR RETURN LINE VOLUME MEASUREMENTS (VR LINES CONNECTED BY MANIFOLD)

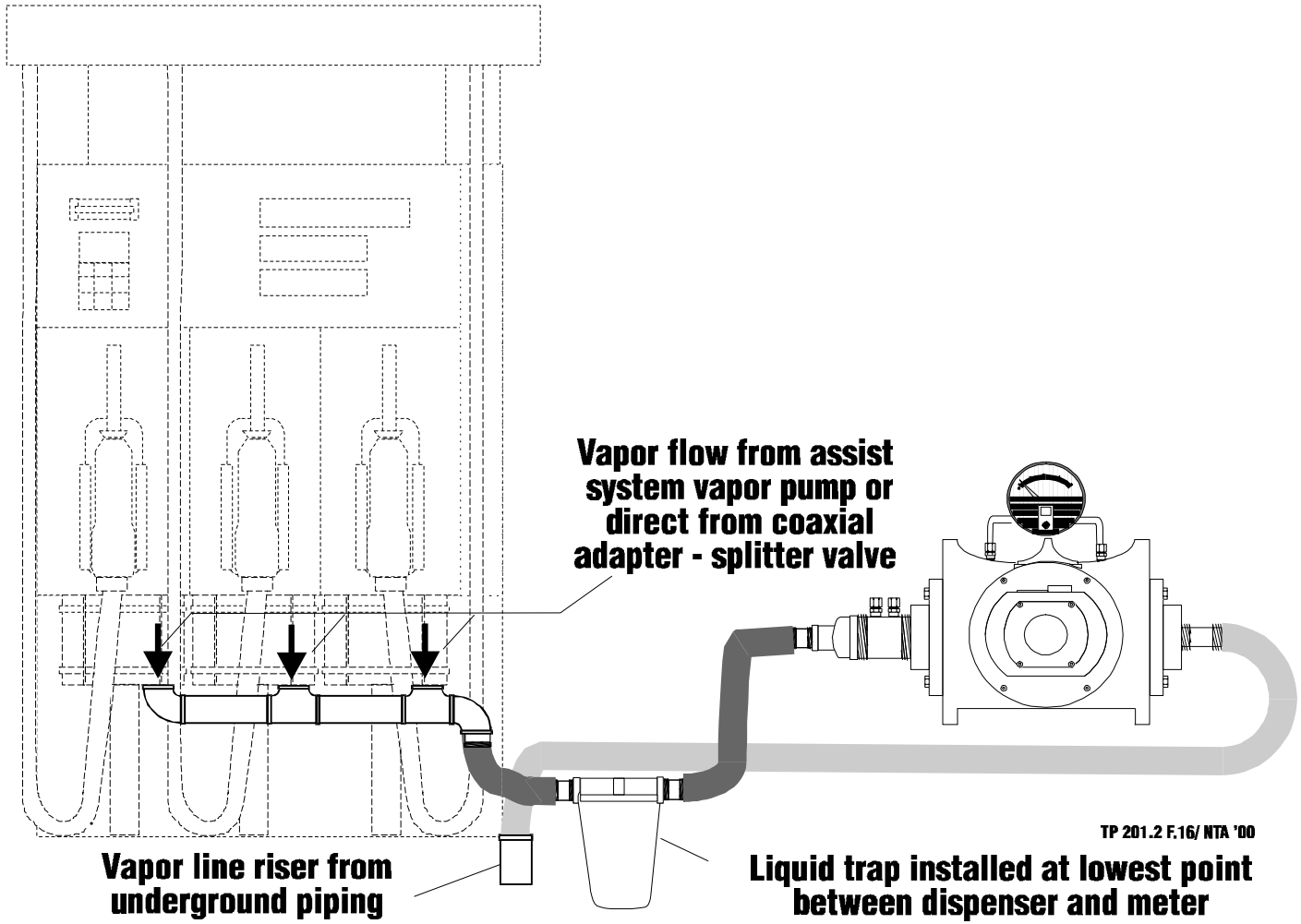

FIGURE 17
OPTIONAL VAPOR RETURN LINE HC CONCENTRATION MEASUREMENTS

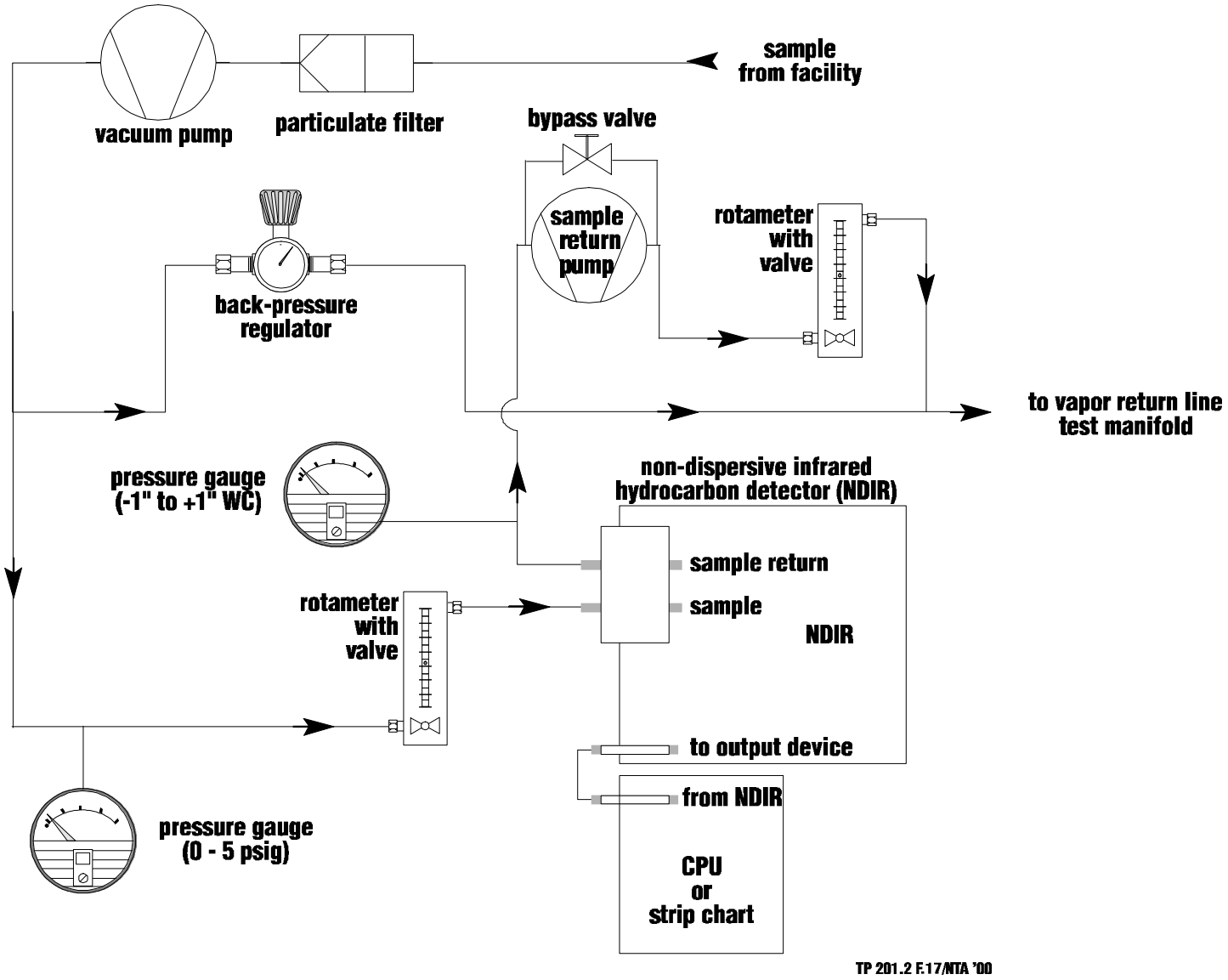

FIGURE 18
TEST POINTS 3 (VENT), 4 (PROCESSOR), 4a (INCINERATOR INLET) & 4b (INCINERATOR EXHAUST)

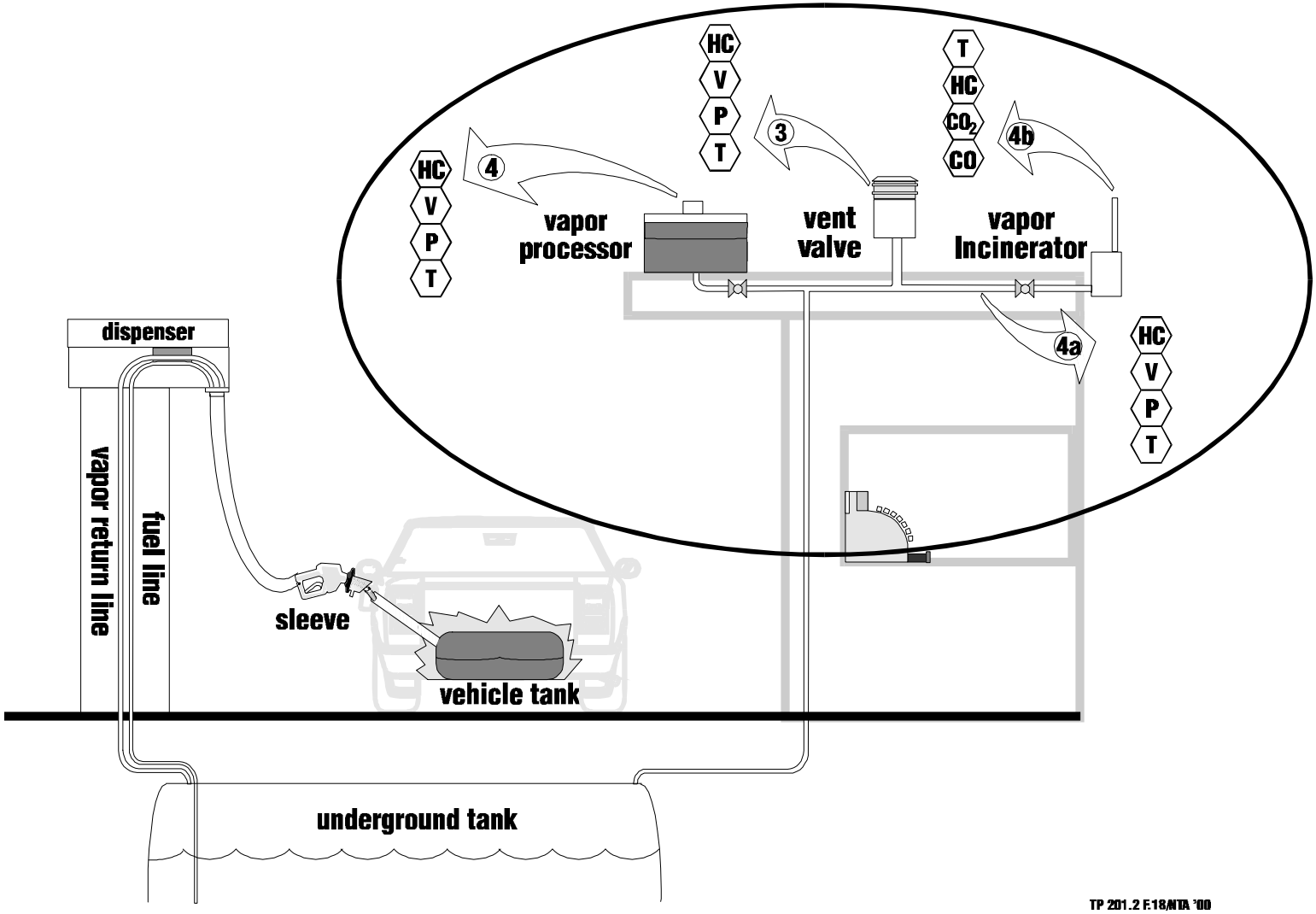

FIGURE 19
VENT SLEEVE APPARATUS INSTALLED ON VENT LINES CONNECTED BY MANIFOLD

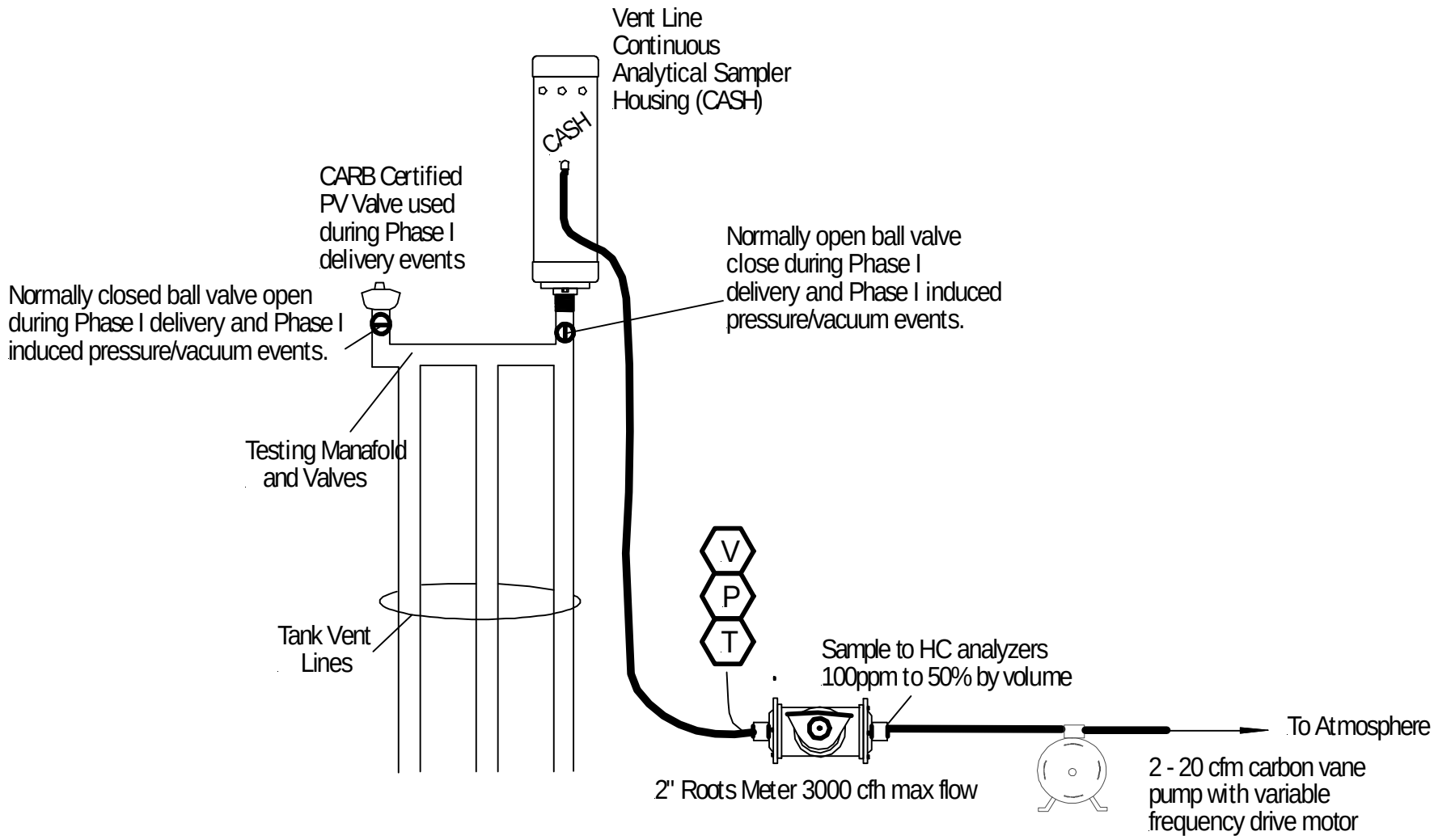

FIGURE 20
VENT SLEEVE APPARATUS INSTALLED ON SINGLE VENT LINE

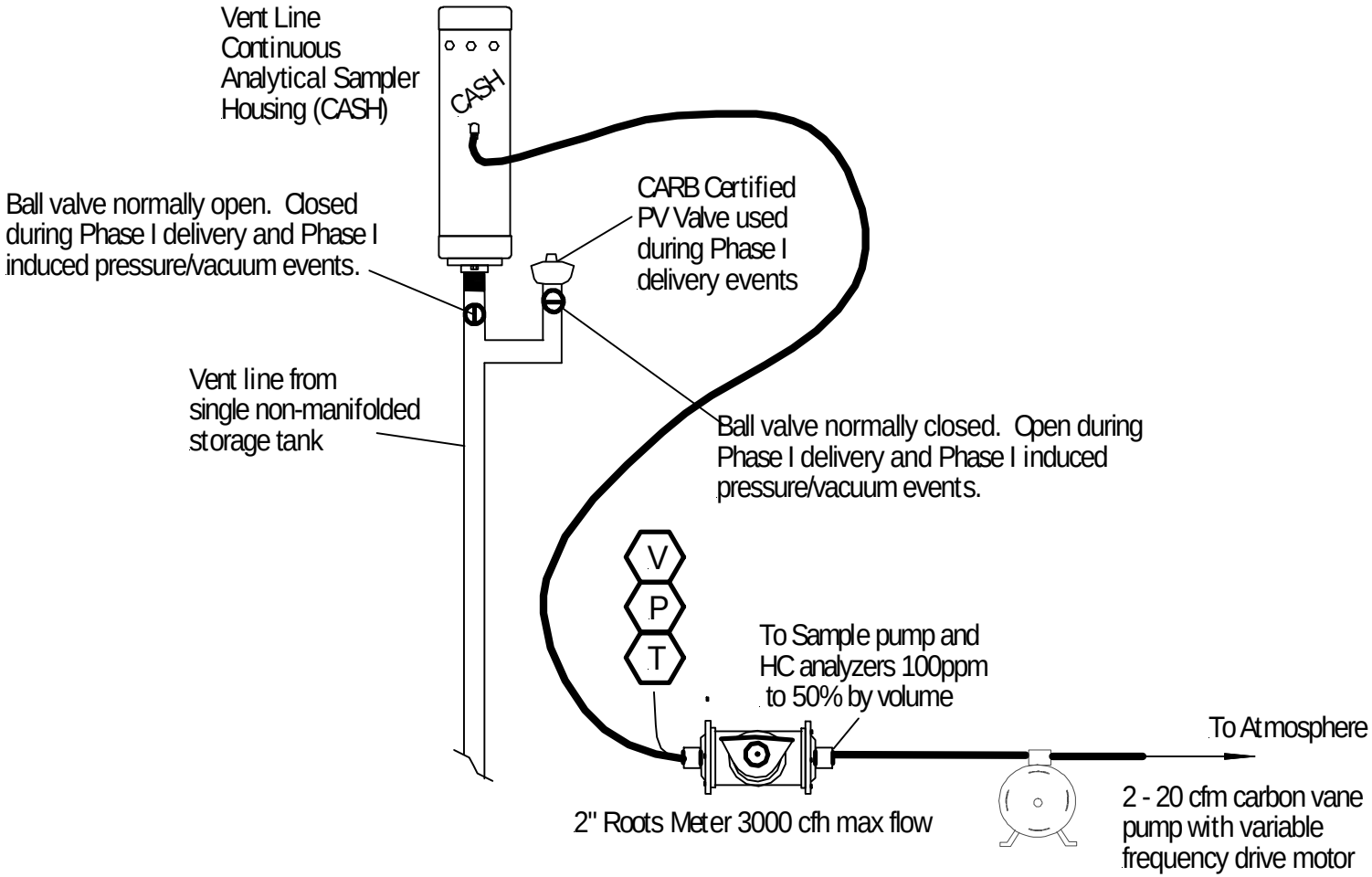

TP201.2f20/NTA '00

FIGURE 21
DESIGN DETAIL OF VENT SLEEVE
CONTINUOUS ANALYZER SAMPLING HOUSING (CASH)

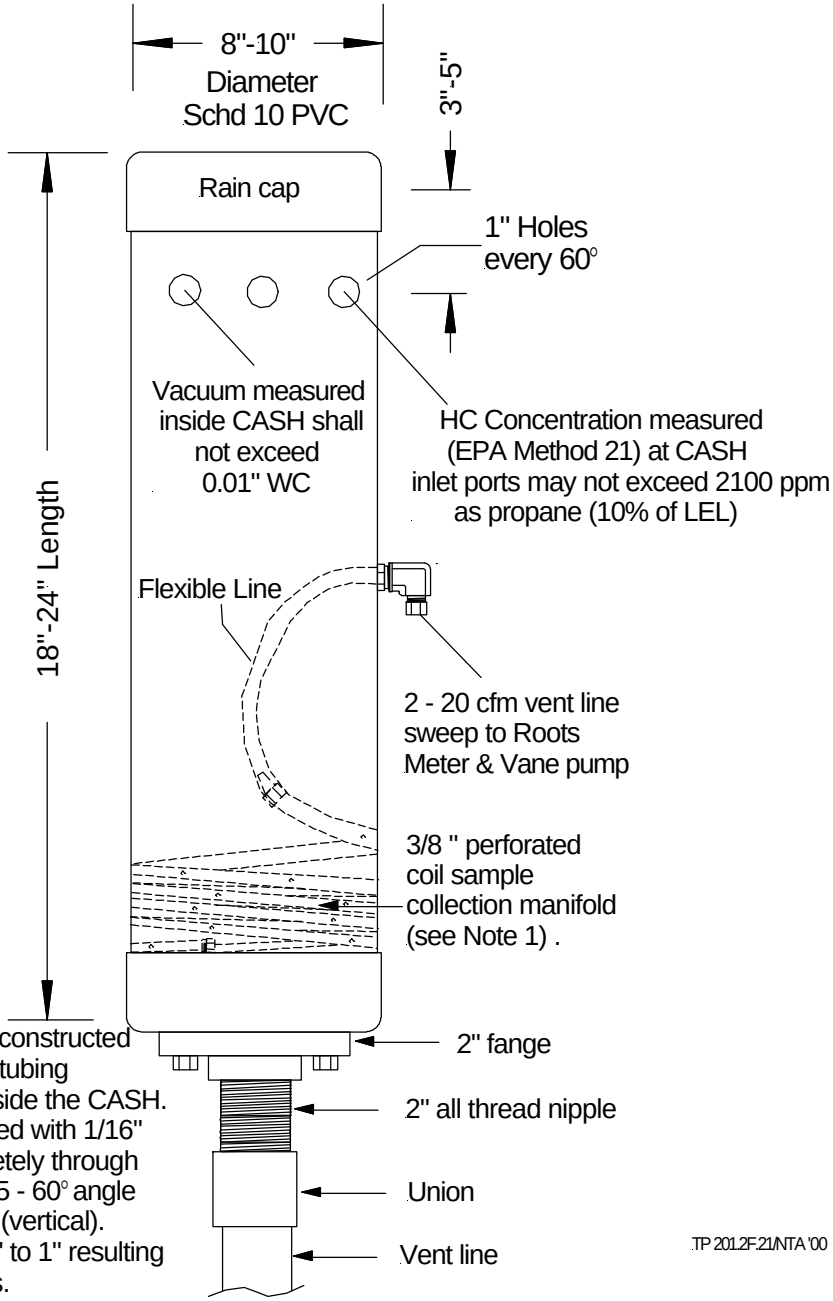

1. Note: Perforated Coil is constructed of 30 - 40 feet of 3/8" metal tubing resulting in 12 to 18 coils inside the CASH. The metal tubing is perforated with 1/16" to 5/64" holes drilled completely through two sides of the tubing at 45 - 60° angle relative to the vent line axis (vertical). Hole spacing should be 1/2" to 1" resulting in 1000 to 2000 perforations.

FIGURE 22
DETERMINATION OF NOZZLE BELLOWS PRESSURE DURING FUELING EPISODES AT TEST POINT 1

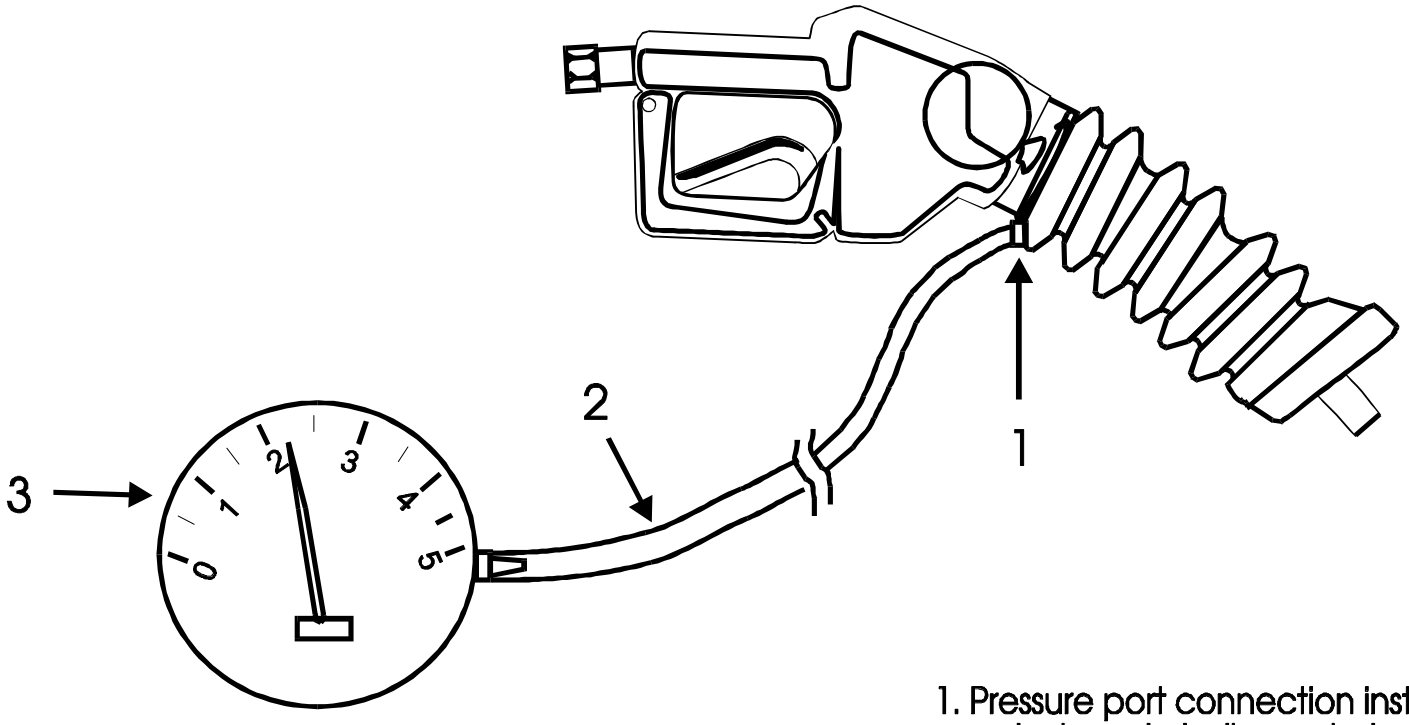

3. 0" - 5" WCG pressure sensing device; maximum incremental graduations 0.1" WCG; minimum readibility +/-0.05" WCG; accuracy 2% of full scale (+/-0.1"WCG)

2. Lightweight flexible tubing routed in a manner that does not interfer with nozzle operation or nozzle sleeve operation on test nozzle.

1. Pressure port connection installed on test nozzle bellows; designed & installed to be leak free at normal bellows pressure & must not affect ability of nozzle to achieve normal sealing efficiency w/vehicle fill pipe.